EUROTROL®

WATER TREATMENT COMPONENTS

PRODUCT CATALOGUE

An entirely **ITALIAN STORY**

Born here, raised in the world

For EUROTROL® this is not just a motto: it is a philosophy of life and enterprise. It was the year 2000 when **Rino Leoni's idea of selling components and solutions for water treatment** became a reality. **A family reality.** The strength of his project is mirrored in his core values: courtesy, respect, and passion.
With a focus on the client, whose needs, requirements, and requests are **always met thanks to EUROTROL®'s standard and customised solutions.**

Thanks to the company's experience, research, and quick response time, ***EUROTROL® is today a leader in the international distribution of components for the treatment of primary water for residential, commercial, and industrial applications.***

We have a **SOLUTION** for **EVERY NEED**

Our products express our philosophy and our history.
The components distributed by EUROTROL® represent who we are.
Our family values and our corporate ethics.

Every product that we make available to our clients is the result of continuously growing expertise, extraordinary skill, **research and innovation.**

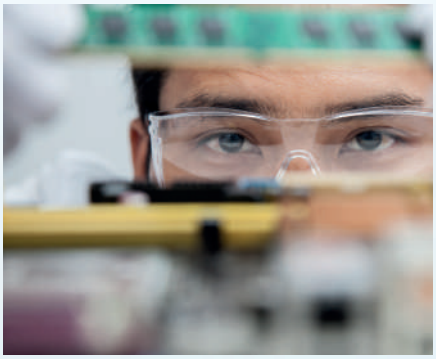

Excellence, in every field

For every sector and application related to the treatment of primary water, **EUROTROL® offers a range of products that interpret the needs and respond to the demands of its clients.**

RESIDENTIAL
COMMERCIAL
INDUSTRIAL

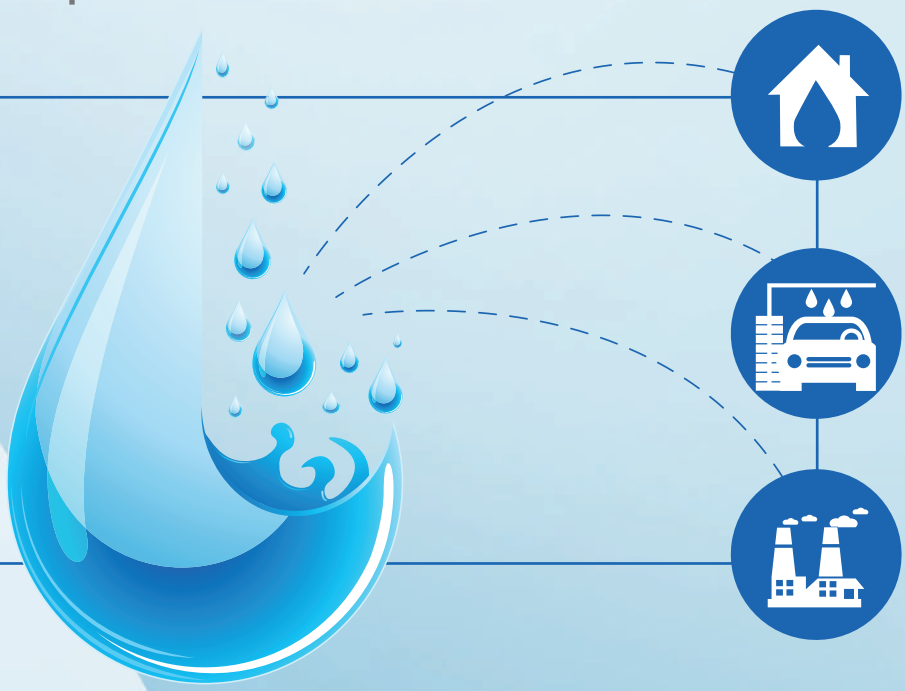

SPACE for EUROTROL®

In just a few years Eurotrol® has developed ***more than 18 European design patents with the EU design registration code n.003156272.*** *It distributes 2/3 of its products under the MWG® brand.*

Choosing only the best products has allowed us to obtain numerous certifications.

GENERAL CONDITIONS OF SALE

1) Effectiveness of these general conditions
These conditions of sale (hereinafter "GCS") are valid for any contract and / or supply and / or sale offer concluded between Eurotrol Spa (hereinafter also the "Seller") and its customers (hereinafter also "Buyer"). The GCS prevail over the Buyer's purchase conditions.
The GCS are available at the following WEB link https://www.eurotrol.it/cgv/ and will have binding effect and will represent the contractual source of the obligations of the Seller and the Purchaser who explicitly accepts them by accepting the confirmation of order sent by seller. The Seller reserves the right to modify, supplement or vary the GCS, attaching these changes to the sales and / or supply offers or to any correspondence sent in writing to the Buyer.

2) Offers and completion of the sale
The Seller prepares the offer based on the request / proposal for sale and / or supply made by the Buyer and sends the offer via e-mail to the Buyer.
A reference to these GCS is included in the body of the offer and the order confirmation prepared by the Seller which contain the WEB link from which to consult them. The information contained in the offers prepared by the Seller may differ from the information contained in the Seller's price list and / or catalog which are to be understood as fully indicative and unilaterally modifiable by the Seller. The offer prepared by the Seller is not binding and does not bind the Buyer in any way until the formulation and transmission of the purchase order by the same Buyer.
Unless otherwise specified in writing, the Seller's offers are valid for 30 days from the date of transmission of the document to the Buyer and the relative prices are EXW Eurotrol Spa warehouse and include, where applicable, packaging. The sale is considered completed at the time and in the place where Eurotrol Spa receives the purchase order from the Purchaser with the Order Confirmation countersigned by the same.
The GCS are understood to be explicitly accepted by the Buyer with the signature for acceptance of the Order Confirmation sent by the Seller.
Once the superior purchase order has been received, the terms and conditions indicated in the offer become binding also with reference to quantities, prices and delivery terms. The delivery date will be scheduled from the date of receipt your confirmation.

3) Minimum order
Orders made by the Buyer must have a minimum taxable value of € 100, the Seller therefore reserves the right not to accept orders with a lower value. If such orders are accepted, an additional cost of € 10 will be charged for management.

4) Terms of payment
The terms of payment are those indicated in the Seller's offer sent to the Buyer. In no case will letters of credit and / or other means of payment separate from bank transfers and Ri.Ba. be accepted as payment methods.

5) Description of the products
The description of the products in the offers prepared by the Seller is the only one that is binding on the Seller. On the contrary, the technical data sheets of the products and the information contained in the catalog are not binding as they are subject to unilateral changes by the Seller. The Buyer must therefore rely solely on the description in the offer before signing and / or accepting the same offer or sending the related order to Eurotrol Spa.

6) Orders for products carried out on specific customer requests
The sale and / or supply of specific products which, on the basis of the requests made by the Purchaser, are not included in the Eurotrol Spa catalog, are governed by independent contracts and / or agreements that supplement or modify these GCS.

7) Additions or changes to orders already issued
The Seller reserves the right to make any additions and / or changes requested by the Buyer with reference to orders already sent to the Seller and in the process of being processed. In any case, the Purchaser's requests for additions and changes will be considered as new and independent orders that will be processed in the manner provided for in these GCS.

8) Cancellation of the Order and / or in any case withdrawal by the Buyer
The cancellation of an order received by the Seller according to the modalities referred to in the above article 2 can only take place against a written consent from the same Seller where no more than five (5) working days have elapsed from the receipt of the confirmation of order by the Seller.

9) Prices and taxes:
Unless otherwise specified:
a) The prices of the products do not include VAT, which must be paid upon delivery or in accordance with the specific provisions indicated in the sales invoice.
b) Taxes, duties, shipping costs not agreed with the Seller, insurance, installation costs and related training of the Purchaser's and / or end user's personnel are neither included nor provided for in the prices indicated in the offer for the purchase of products.

10) Terms of delivery
Unless otherwise agreed in writing, any delivery term also provided for in the offer is not binding for the Seller and is merely indicative.
The Seller reserves the right to make partial deliveries.
The Seller reserves the right to refuse orders with mandatory / binding delivery terms indicated by the Buyer in writing when placing the order.

11) Shipping
The goods travel at the Buyer's risk even if shipped carriage paid.
The Buyer must check the quantities and conditions of the goods upon receipt; any complaints must be sent in writing to the Seller no later than ten (10) working days from receipt of the goods (in any case taking into account the Seller's closing calendar).
In any case, it is understood that:
a) even if the Seller takes delivery of the goods on behalf and in the interest of the Buyer, the Buyer must in any case take full responsibility for the relative transport assuming all the consequent responsibilities even in the hypothesis of any damage and / or loss / loss suffered by the goods during transport.

b) The duty of inspection and acceptance of the Products is in any case always borne by the Buyer, who, upon taking delivery of the Products at his warehouse / factory, must immediately check the quantities and packaging of the Products and record any objection in the delivery note by refusing the goods or accepting them with reserve, making the related complaints against the Seller in compliance with the higher term of ten (10) working days.

12) Delays in taking the goods stored in the Seller's warehouse
The date of collection of the goods indicated in the purchase order received by the Seller must be considered mandatory and may be waived and / or otherwise modified only with the prior written consent of the Seller.
After fifteen (15) working days of delay with respect to the date of collection of the goods, the Seller will have the right to declare the order canceled.

13) Returns of material
At the request of the Buyer, the Seller may consent in writing to the return and / or in any case to the return by the Buyer of all or part of the goods referred to in a specific purchase order.
The Buyer's request for total or partial return of the goods must in any case be received in writing by the Seller no later than 90 calendar days from the date on which the goods in question were delivered to the Buyer's warehouse / factory.
Accepted the request from the Seller, it is in any case understood and agreed that:
a) shipping is at the Buyer's expense.
b) A penalty equal to 20% of the taxable sales value of each returned material will be applied to the Buyer.

If upon the return of the returned material it is incomplete and / or damaged in any part, including packaging, it will NOT be considered useful for resale, the Seller will then issue a return note to the Buyer for non-compliant material. reserving all claims for compensation and / or in any case any claim against the same Buyer, thus not issuing any credit note.

14) Warranties
The goods deemed to be defective, subject to the written authorization of the Seller, may be returned carriage paid by the Purchaser with accompanying information notes about the defect found.
The purchased products are warranties free from defects from the date of production (if missing, from the date of shipment) for a period of 1 year, except for:
a) 10 years: MWG fiberglass cylinders from size 5x13 up to size 13x54.
b) 5 years: the other MWG fiberglass cylinders with other dimensions.

In the event of a warranty claim for damage occurring during transport carried out by the Seller, the Buyer must:
a) present a copy of the transport document indicating "material accepted with reserve". In the absence of such documentation, the opening of the Guarantee case will not take place.
b) no dispute with reference to the quantity, quality, type, and packaging of the Products may be made except through the communication affixed to the delivery note indicated in the previous period.

With reference to each warranty request sent in writing to the Seller, the Buyer must:
a) agree to make the disputed products available to the Seller for inspection; this inspection will be carried out by the Seller or by an expert appointed by the Seller or by the manufacturer of the goods.
b) deliver to the Seller any ancillary documentation deemed essential for the analysis for the evaluation of the requested Warranty.
c) Any product for which the documentation has not been delivered in compliance with the procedures and terms indicated here by the Seller will not be considered approved and accepted. Once the existence of the requirements for the validity / effectiveness of the guarantee has been recognized, the results of any analyzes carried out on the products found to be defective will not give rise to minutes with technical details as these operations are covered by industrial secrecy.

15) Non-payment or late payment
In the event of non-payment or delayed payment, even partial, with respect to the agreed deadline and indicated in the invoice, the Seller may, without prior notice, suspend the commercial activities subject to each order and / or in any case suspend the relative deliveries until the balance due by the Buyer. In any case, in the event of delayed payment at the agreed deadlines, interest on late payments will accrue in favor of the Seller calculated at the official reference rate of the European Central Bank increased by 4 (four) points.
It is understood that ownership of the goods referred to in each order will remain with the Seller until full payment of the consideration by the Buyer.
The delay in payments will also cause the suspension of the warranty for the products sold.
In the event of failure or delayed payment, even partial, by the Buyer, the Seller will still have the right to suspend any deliveries still to be made or to consider the contract terminated by law pursuant to art. 1456 of the Civil Code, upon written notice to the Buyer.

16) Force majeure
For reasons of force majeure we mean the completely sudden and / or unpredictable circumstances relating to the materials, people and / or organizations / states / companies directly or indirectly involved that may make it impossible to manage or fulfill the order by of the Seller.
Merely by way of example and not exhaustively, for reasons of force majeure we mean, without any limitation, strikes, lockouts, riots, provisions of the public administration, subsequent blocks of the possibility of export or import, embargoes, acts of war, various impediments to third parties, technical complications occurred in the production of the product, natural disasters, etc.

17) Compliance with third party trade rules
The Buyer undertakes not to sell US-made or European-made products in countries where there is a US and / or European Community embargo.
In this sense, it is understood that the Seller will not be able to ship the goods to the countries listed in the US Black List and / or the European

Community which the Purchaser declares to be well aware of and which may in any case be subject to changes and additions.

18) Treatment of personal data
The Buyer's personal data will be processed in accordance with the provisions of Italian and European law on the processing of personal data (Legislative Decree 10 August 2018 no. 101, GDPR).
The Seller informs the Buyer that the Seller is the data controller, and that the Buyer's personal data are collected and processed exclusively for the execution of this agreement.
The Purchaser has the right to request the Seller to update, rectify, integrate, cancel and transform their data into anonymous form.

19) Jurisdiction and applicable law
Any dispute that may arise regarding the interpretation, validity, applicability, or termination of these GCS and of the individual contracts and / or supply and / or sale offers, is the exclusive competence of the Court of Milan.
The law applicable to these GCS and to individual supply and / or sales contracts is Italian law.

20) Final provisions
The invalidity in whole or in part of individual provisions of these GCS does not affect the validity of the remaining provisions.
These General Conditions of Sale are drawn up in two languages, Italian, and English. In case of doubts about interpretation, the Italian version will prevail.
Pursuant to and for the purposes of Articles 1341 and 1342 of the Italian Civil Code, the Purchaser specifically approves the provisions referred to below:
Art. 1 - Effectiveness of these general conditions.
Art. 2 - Offers and completion of the sale.
Art. 8 - Cancellation of the Order and / or in any case withdrawal by the Buyer.
Art. 10 - Delivery terms.
Art. 11- Shipping.
Art. 13 - Returns of material.
Art. 15 - Non-payment or late payment.
Art. 19 - Jurisdiction and applicable law.
Art. 20 - Final Provisions.

The images and texts contained in this document are the property of Eurotrol S.p.A, which reserves the right to change them without notice.
It may not be used, even partially, without prior authorization from Eurotrol S.p.A.

REF.	DESCRIZIONE	DESCRIPTION
AV036	KIT MESSA A DISTANZA TIMER LOGIX CON CAVO Lg=3m P/N 1263718	KIT REMOTE LOGIX CONTROL W/CABLE LG.32 P/N 1263718
AV039A	KIT BY-PASS 1265 CODOLO D.32 PVC INCOLLAGGIO *	BY PASS 1265 KIT PVC D.32 TO GLUE*
AV066	KIT MICRO-SWITCH 268 5.0 A	MICRO-SWITCH KIT FOR 268 5.0 A
AV121	VALVOLA GALLEGGIANTE PER TINO PERMANGANATO	BRINE VALVE FOR PERMANGANATE FEEDER
AV165	NIPPLO PVC-U 3/4" M X D.32 M	NIPPLE PVC-U 3/4" M X D.32 M
AV166	NIPPLO PVC-U 3/4" M X D.40 F	NIPPLE PVC-U 3/4" M X D.40 F
AV167	KIT ELETTR.VALV.DI BLOCCO 220 V-50HZ DUPLEX 255/764*	SOLENOID VALVE KIT 220V - 50HZ DUPLEX 255/764*
AV168	KIT ELETTR.VALV.DI BLOCCO 220 V-50HZ DUPLEX 278/764*	SOLENOID VALVE KIT 220V - 50HZ DUPLEX 278/764*
AV209	KIT AMMONIACA IPT	IPT AMMONIA KIT
AV211	KIT MANGANESE IPT	IPT MANGANESE KIT
AV212	KIT NITRATI IPT	IPT NITRATES KIT
AV220	KIT COLORTEST CLORO DPD	HYDROCHECK DPD CHLORINE COLORTEST KIT
AV221	KIT COLORTEST AMMONIACA INDOFENOLO	HYDROCHECK INDOPHENOL AMMONIA COLORTEST KIT
AV222	KIT COLORTEST FERRO HIGH	HYDROCHECK HIGH IRON COLORTEST KIT
AV223	KIT COLORTEST MANGANESE HYDROCHECK	HYDROCHECK MANGANESE COLORTEST KIT
AV224	KIT COLORTEST NITRATI	HYDROCHECK NITRATES COLORTEST KIT
AW141A	COPERCHIO 255-263-268 SERIE 400 (I-Lid) NEW STYLE	COVER FOR 255-263-268 SERIE 400 (I-Lid) NEW STYLE
AW150	ALBERO A CAM STANDARD UN PEZZO	STANDARD CAMSHAFT ONE PIECE
AW152	ALBERO A CAM XS-LR EXTRA SALE	CANSHAFT XS-LR EXTRA SALT
AW153	ALBERO A CAM LR LUNGO RISCIACQUO	CAMSHAFT LONG RINSE
AW154	ALBERO A CAM WS RISPARMIO ACQUA CON- TROLAVAGGIO	CAMSHAFT WATER SAVER
AW166	CORPO VALVOLA 263-268/400 COMPLETO DI PIASTRA SUPERIORE E SENZA REGOLAZ	263-268/400 VALVE ASSEMBLY W/O FLKOW CONTROLS
AW185	SPINA DI FISSAGGIO TIMER	TIMER LOCKING PIN
AW202	TURBINA CONTATORE DI FLUSSO PER 255 E 168	FLOW METER 255-168
AW258	ASSIEME TURBINA MONTAGGIO INTERNO 367	METER ASSEMBLY 367
AW260	CAVO ELETTRICO DI ALIMENTAZIONE DEL SENSORE OTTICO 366 367	OPTIC SENSOR POWER CABLE
AW306	INIETTORE CIECO CON O-RING PER 263	PLUGGED INJECTOR ASSEMBLY 263
AW309	CLIP ALBERO A CAM PERFORMA	CAMSHAFT CLIP
AW315	ALBERO A CAM 268 STD	CAMSHAFT FOR 268 STD
AW316	ALBERO A CAM 268 XS	CAMSHAFT FOR 268 XS
AW317	ALBERO A CAM 268 FA	CAMSHAFT FOR 268 FA
AW318	ALBERO A CAM 263	CAMSHAFT FOR 263
AW359	PIASTRA SUPERIORE 263/268/278 LOGIX P/N 1235338	TOP PLATE 263/268/278 LOGIX P/N 1235338
AW400	KIT DISCO 6 GGG PER 440-440i	6 DAYS KIT DISCS FOR 440-440i
AW410	WIRE NUT P/N 1007483	WIRE NUT P/N 1007483
AW412	RONDELLA FRIZIONE P/N 3030003	BOWED WASHER P/N 3030003
AW413	MOLLA P/N 1030830	SPRING P/N 1030830
AW420	MOTORE 230V.50 HZ PER 440-450	230V-50HZ MOTOR FOR 440-450
AW434	MOTORE 9V.60 HZ PER 460i-460tc	9V-60HZ MOTOR FOR 460i-460tc
AW451	VITE COPERCHIO MOTORE	MOTOR CAP SCREW
AW458	INGRANAGGIO NERO 90' A (INF.# 10)	BLACK GEAR 90' A (INF.# 10)
AW459	INGRANAGGIO NERO 90' B	BLACK GEAR 90' B
AW462	TIMER 440i 7GG 59' 12V.50HZ ITA	TIMER 440i 7DAYS 59' 12V.50HZ ITA
AW468	TIMER 440i 7GG 119'12V.50 HZ PER FILTRAZIONE	TIMER 440i 7DAYS 119'12V.50 HZ FOR FILTRATION
AW484	TIMER 460tc 118' 12V.60HZ SYM US	TIMER 460tc 118' 12V.60HZ SYM US
AW485	TIMER 460tc 59' 12V.60HZ SYM US	TIMER 460tc 59' 12V.60HZ SYM US
BSC2475F7	BOMBOLA STRUCTURAL 24X75 6" + 6" BLU	STRUCTURAL PRESSURE VESSEL 24X75 6" + 6" BLUE
BSC3078F7	BOMBOLA STRUCTURAL 30X78 6" + 6" BLU	STRUCTURAL PRESSURE VESSEL 30X78 6" + 6" BLUE
BSRT3072A3E	BOMBOLA STRUCTURAL 30X72 4" BLU	STRUCTURAL PRESSURE VESSEL 30X72 4" BLUE
BSRT3078A3E	BOMBOLA STRUCTURAL 30X78 6" BLU	STRUCTURAL PRESSURE VESSEL 30X78 6" BLUE
BSRT3672A3E	BOMBOLA STRUCTURAL 36X72 4" BLU	STRUCTURAL PRESSURE VESSEL 36X72 4" BLUE
CA216E	MAGNUM 1.5" 298/742 36" (30 GPM) NHB SYMBOL 12/230V 50HZ EURO PLUG	MAGNUM 1.5" 298/742 36" (30 GPM) NHB SYMBOL 12/230V 50HZ EURO PLUG
CC048	VITE AUTOFILETTANTE PER ADATTATORE MAGNUM NORYL	SELF-THREADING SCREW FOR NORYL MAGNUM ADAPTER
CC109	REGOLATORE DI FLUSSO 25 GPM	FLOW CONTROL DISK 25 GPM
CC115	CAM PER SEGNALE IDRAULICO CICLO LUNGO	CAM PILOT AUXILIARY LONG CYCLE
CC116	CAM PER SEGNALE IDRAULICO CICLO CORTO	CAM PILOT AUXILIARY SHORT CYCLE
CC118	KIT CAM PILOTA AUSILIARIO P/N 1041064S	KIT CAME PILOTE AUXILIAIRE P/N 1041064S
CD110A	N. 16 VITI INOX 12-24 UNC L=45 MM CON RONDELLA P/N 4001250	N.16 SCREWS INOX 12-24 UNC L=45 MM & WASHERS P/N 4001250
CD133	CAVO TURBINA LOGIX LG=7,5 M	TURBINE CABLE LOGIX LG=7,5 M
CD137	COPERCHIO TIMER 293-298 P/N 1262674	TIMER COVER 293-298 P/N 1262674
CD138	ASSIEME PROGRAMMATORE MECCANICO 293-298 P/N 1233809	LOGIX MAGNUM CONTROL MECH. ASSEMBLY 293-298 P/N 1233809
CD155	CODULO D.32 MM IN PVC	32 MM METRIC CPVC ADAPTER
CD156	CODULO D.50 MM IN PVC	50 MM METRIC CPVC ADAPTER
CD157	CODULO D.63 MM IN PVC	63 MM METRIC CPVC ADAPTER
CD171	ADATTATORE MAGNUM AISI 304 P/N 3024790	AISI 304 MAGNUM ADAOPTER P/N 3024790
DE005	O-RING VESSEL 3012	O-RING VESSEL 3012
DE009	O-RING PER VESSEL 1812 DE010	O-RING FOR VESSEL 1812 DE010
DE024	LEVETTA PER RUBINETTO LONG REACH	LEVER FOR LONG REACH FAUCET
DE028C	CARTUCCIA IN-LINE CARBONE ATTIVO 10"X2" 1/4" E-Z FITTING SENZA ETICHETTA	IN LINE ACTIVATED CARBON CARTRIDGE IN-LINE 10"X2" 1/4" E-Z FITTING W/O L
DE058	OGIVA IN PLASTICA 1/4"	PLASTIC 1/4" OGIVE
DE080	CONTATORE CON BLOCCO 1/4" NPT	MECHANICAL FLOW METER 1/4" NPT
DE087S2	KIT TENUTA DEL RUBINETTO DE087	SEAL KIT FOR DE087 FAUCET
DE096P	PROLUNGA FILETTATA 1"X1/4" M PER DE096 E DE097	BALL VALVE ADAPTOR 1" X 1/4" M FOR DE096 - DE097
DE098A	VALVOLA DI REGOLAZIONE IN METALLO 3/8" TUBO IN LINE	IN LINE NEEDLE BRASS 3/8"
DE126	RACCORDO DIRITTO 1/4" TUBO UNION	STRAIGHT FITTING 1/4" TUBE UNION
DE420	BAFFLE P/N 20432	BAFFLE P/N 20432
DE423	ALLEN SCREW M4X12 P/N 20443	ALLEN SCREW M4X12 P/N 20443
DE610	KIT N.1 SADDLE & STRAP ASSEMBLY" WAVE-4"*	KIT N.1 SADDLE & STRAP ASSEMBLY" WAVE-4"*
DE611	SADDLE WAVE-4" P/N 10140	SADDLE WAVE-4" P/N 10140
DE612	STRAP ASSEMBLY WAVE-4" P/N 20124+10189+20128	STRAP ASSEMBLY WAVE-4" P/N 20124+10189+20128
DE613	BAFFLE P/N 20017	BAFFLE P/N 20017
DE614A	4" PLUG NYLON 450 PSI 1/2" BSPP F/C/P PORT (C-R) W/ADAP.SEAL	4" PLUG NYLON 450 PSI 1/2" BSPP F/C/P PORT (C-R) W/ADAP.SEAL
DE617	ALLEN SCREW M8X20 316 S.S. P/N 11546	ALLEN SCREW M8X20 316 S.S. P/N 11546
DE618	4" PLUG PP +30% FG 300 PSI 3/4" BSPP F/C - 1/2" P PORT (D-R) W/ADAP.SEAL	4" PLUG PP +30% FG 300 PSI 3/4" BSPP F/C - 1/2" P PORT (D-R) W/ADAP.SEAL
DE660	4" PLUG PP+30% FG300 PSI SIDE-PORT (P/N 10124)	4" PLUG PP+30% FG300 PSI SIDE-PORT (P/N 10124)
DE801	POMPA A PALETTE RO 600 MAXI IN AISI CON BYPASS 1/2" NPT	ROTARY PUMP RO 600 MAXI AISI W/BY PASS 1/2" NPT
DE802	POMPA A PALETTE RO 800 MAXI IN AISI CON BYPASS 1/2" NPT	ROTARY PUMP RO 800 MAXI AISI W/BY PASS 1/2" NPT
DE803	POMPA A PALETTE RO 1000 MAXI IN AISI CON BYPASS 1/2" NPT	ROTARY PUMP RO 1000 MAXI AISI W/BY PASS 1/2" NPT
DE804	POMPA A PALETTE RO 50 IN OTTONE CON BY-PASS 3/8" NPT	ROTARY PUMP RO 50 BRASS WITH BYPASS 3/8" NPT
DE805	POMPA A PALETTE RO 150 IN OTTONE CON BY PASS 3/8" NPT	ROTARY PUMP RO 150 BRASS WITH BYPASS 3/8" NPT
DE806	POMPA A PALETTE RO 200 IN OTTONE CON BY-PASS 3/8" NPT	ROTARY PUMP RO 200 BRASS WITH BYPASS 3/8" NPT
DE807	POMPA A PALETTE RO 300 IN OTTONE CON BY-PASS 3/8" NPT	ROTARY PUMP RO 300 BRASS WITH BYPASS 3/8" NPT
DE808	POMPA A PALETTE RO 400 IN OTTONE CON BY-PASS 3/8" NPT	ROTARY PUMP RO 400 BRASS WITH BYPASS 3/8" NPT
DE809	POMPA A PALETTE RO 600 IN OTTONE CON BY PASS 1/2" NPT	ROTARY PUMP RO 600 BRASS WITH BYPASS 1/2" NPT
DE810	POMPA A PALETTE RO 800 IN OTTONE CON BY PASS 1/2" NPT	ROTARY PUMP RO 800 BRASS WITH BYPASS 1/2" NPT
DE811	POMPA A PALETTE RO 200 IN OTTONE 3/8" NPT	ROTARY PUMP RO 200 BRASS 3/8" NPT
DE812	POMPA A PALETTE RO 300 IN OTTONE 3/8" NPT	ROTARY PUMP RO 300 BRASS 3/8" NPT
DE813	POMPA A PALETTE RO 400 IN OTTONE 3/8" NPT	ROTARY PUMP RO 400 BRASS 3/8" NPT

DE814	POMPA A PALETTA RO 1000 IN OTTONE BY PASS 1/2" NPT	ROTARY PUMP RO 1000 BRASS WITH BYPASS 1/2" NPT
DE817	POMPA A PALETTE RO 600 IN OTTONE 1/2" NPT	ROTARY PUMP RO 600 BRASS 1/2" NPT
DE818	POMPA A PALETTE RO 800 IN OTTONE 1/2" NPT	ROTARY PUMP RO 800 BRASS 1/2" NPT
DE819	POMPA A PALETTE RO 1000 IN OTTONE 1/2" NPT	ROTARY PUMP RO 1000 BRASS 1/2" NPT
DE820	FLANGIA POSTERIORE GRAFITE P/N 28007-6000499	GRAPHITE REAR FLANGE P/N 28007-6000499
DE821B	PIN S.S. 800 P/N 28004	PIN S.S. 800 P/N 28004
DE821C	PIN S.S. 1000 P/N 28026	PIN S.S. 1000 P/N 28026
DE822	PALETTA GRAFITE PR2153	GRAPHITE VANE PR2153
DE822A	PALETTA GRAFITE PR2022	GRAPHITE VANE PR2022
DE823B	STATORE GRAFITE 800 PR 2158	GRAPHITE ROTOR 800 PR 2158
DE823C	STATORE GRAFITE 1000 PR 2159	GRAPHITE ROTOR 1000 PR 2159
DE823D	STATORE GRAFITE 400 - PR2026	GRAPHITE ROTOR 400 - PR2026
DE824	FLANGIA ANTERIORE GRAFITE P/N 28002-6000469	GRAPHITE FRONT FLANGE P/N 28002-6000469
DE826	BALL BEARING PR2075	BALL BEARING P/N 22084
DE827	POMPA A PALETTE RO 300 IN AISI CON BY-PASS 3/8" NPT	ROTARY PUMP RO 300 AISI W/BY PASS 3/8" NPT
DE828	POMPA A PALETTE RO 400 IN AISI CON BY-PASS 3/8" NPT	ROTARY PUMP RO 400 AISI W/BY PASS 3/8" NPT
DE830	FASCETTA COMPLETA DI VITE PER POMPE A PALETTE	COLLAR W/SCREW FOR ROTARY PUMP
DE832	POMPA A PALETTE RO 300 IN AISI 3/8" NPT	ROTARY PUMP RO 300 AISI 3/8" NPT
DE832AV	POMPA A PALETTE RO 300 IN AISI 3/8" GAS TENUTA IN VITON	ROTARY PUMP RO 300 AISI 3/8" GAS VITON SEAL
DE833	POMPA A PALETTE RO 400 IN AISI 3/8" NPT	ROTARY PUMP RO 400 AISI 3/8" NPT
DE837	POMPA A PALETTE RO 600 MAXI IN AISI 1/2" NPT	ROTARY PUMP RO 600 MAXI AISI 1/2" NPT
DE838	POMPA A PALETTE RO 800 MAXI IN AISI 1/2" NPT	ROTARY PUMP RO 800 MAXI AISI 1/2" NPT
DE839	POMPA A PALETTE RO 1000 MAXI IN AISI 1/2" NPT	ROTARY PUMP RO 1000 MAXI AISI 1/2" NPT
DE856	CALOTTA MOTORE 300 W	MOTOR 300 W SHELL
DE857	VENTOLA MOTORE 300 W	MOTOR 300 W FAN
DE858	CONDENSATORE MF 6,3 PER MOTORE 300W P/N 0232R	CAPACITOR MF 6,3 FOR MOTOR 300 W P/N 0232R
DE859	CALOTTA COPRIVENTOLA PER MOTORE M80 MONO/TRIFASE 550W	SHELL COVER FOR MOTOR M80 SINGLE/TRIPHASE
DE860A	MOTORE 1/2 CV M71 4 POLI 220V/60HZ MONOFASE	MOTOR 1/2 CV M71 4 POLI 220V/60HZ SINGLE PHASE
DE861A	MOTORE 3/4CV-M80-4POLI 220V/60HZ MONOFASE B3/B14	MOTORE 3/4 CV-M80-4POLI 220V/60HZ SINGLE PHASE B3/B14
DE864A	MOTORE 3/4 CV-M80 4 POLI 220/380V-50HZ TRIFASE SERVOVENTILATO	INDEPEND.COOLED MOTOR 3/4 CV-M80 4 POLESEE PHASE
DE865A	MOTORE 1 CV/750W -M80 460V-60HZ TRIFASE B3/B14	MOTOR 1 CV/750W -M80 460V-60HZ TRIPHASE B3/B14
DE867	CALOTTA COPRIVENTOLA PER MOTORE M71 MONO/TRIFASE 370W	SHELL COVER FOR MOTOR M71 SINGLE/TRIPHASE 370W
DE868	PIEDINO DI FISSAGGIO B3 - MOTORE M80	FIXING LEG B3 FOR MOTOR M80
DE869A	VENTOLA PER MOTORE M71 4 P	M71 4 P MOTOR FAN
DE869B	VENTOLA PER MOTORE M80 4 P	M80 4 P MOTOR FAN
DE896A	POMPA TRASCINAM. MAGNETICO 300 IN AISI 3/8" GAS NO BYPASS TENUTA VITON M	MAGNETICALLY COUPLED PUMP 300 IN AISI 3/8" GAS NO BYPASS VITON SEAL MAGN
DE898	KIT ADATTATORE MAG 71 PR	MAG 71 PR ADAPTER KIT
DE899	MAGNETE ESTERNO 71 MAG-PRG	EXTERNAL MAGNET 71 MAG-PRG
DE930	VASO DI RICAMBIO P/N 1239705	SUMP P/N 1239705
DE932	O-RING PER VASO P/N 1240326	SUMP O-RING P/N 1240326
DE935	TESTATA COMPLETA PRF-RO P/N 4000445	HEAD ASSEMBLY PRF-RO P/N 4000445
DE938	KIT RACCORDO DI SCARICO CON FASCETTE P/N 1240564	DRAIN FITTING KIT W/COLLARS P/N 1240564
DE941	PIASTRA DI SICUREZZA PER FISSAGGIO RACCORDI PRF-RO P/N 3038026	SAFETY PLATE FOR FITTING FIXING PRF-RO P/N 3038026
DE942	RUBINETTO CON AIR-GAP P/N 3020487	AIR-GAP FAUCET P/N 3020487
DE945	KIT RACCORDI DI COLLEGAMENTOPRF-RO P/N 4000330	CONNECTION FITTINGS KIT PRF-RO P/N 4000330
DE946	KIT TUBI DI COLLEGAMENTO P/N 1255736	CONNECTION TUBE KIT P/N 1255736
DE954	RACCORDO GOMITO CONCENTRATO 3/8" BLACK P/N 1264462	CONCENTRATE ELBOWED FITTING 3/8" BLACK P/N 1264462
DE955	RACCORDO GOMITO ALIMENTO 1/2" WHITE P/N 12400117	FEED ELBOWED FITTING 1/2" WHITE P/N 12400117
DE956	RACCORDO GOMITO PERMEATO 3/8" BLUE P/N 12400118	PERMEATE ELBOWED FITTING 3/8" BLUE P/N 12400118
DE961	RETRO FIT KIT PRF-RO P/N 4000454	RETRO FIT KIT PRF-RO P/N 4000454
DG008	SCHEDA DISPLAY R.O. ELECTRIC PANEL	DISPLAY BOARD R.O. ELECTRIC PANEL
DG009	SCHEDA POWER R.O. ELECTRIC PANEL MODULO 0-100 COMPLETA DI CAVO FLAT	POWER BOARD R.O. ELECTRIC PANEL MODULE 0-100 W/FLAT CABLE
DG011	SCHEDA POWER R.O. ELECTRIC PANEL MODULO 0-500 N COMPLETA DI CAVO FLAT	POWER BOARD R.O. ELECTRIC PANEL MODULE 0-500 W/FLAT CABLE
DG013	CELLA DI CONDUCIBILITA' K=5 ATT.3/8" CON CAVO	CONDUCTIVITY PROBE K=5 CONN.3/8" W/CABLE
DG014	CELLA DI CONDUCIBILITA' K=1 ATT. 3/8" CON CAVO	CONDUCTIVITY PROBE K=1CONN.3/8" W/CABLE
DG300A	POMPA DOSATRICE ORIZZONTALE PL 2 L/H A 18 BAR IN PP CON OR IN EPDM	METERING PUMP HORIZONTAL PL 2 L/H @ 18 BAR PP W/OR EPDM
DG304A	POMPA DOSATRICE ORIZZONTALE PL 8 L/H A 8 BAR IN PP CON OR IN EPDM	METERING PUMP HORIZONTAL PL 8 L/H @ 8 BAR PP W/OR EPDM
DG310A	POMPA DOSATRICE ORIZZONTALE MF 2 L/H A 18 BAR IN PP CON OR IN EPDM	METERING PUMP HORIZONTAL MF 2 L/H @ 18 BAR PP W/OR EPDM
DG314A	POMPA DOSATRICE ORIZZONTALE MF 8 L/H A 8 BAR IN PP CON OR IN EPDM	METERING PUMP HORIZONTAL MF 8 L/H @ 8 BAR PP W/OR EPDM
DG324A	POMPA DOSATRICE VERTICALE MF 6 L/H A 7 BAR IN PP CON OR IN EPDM	METERING PUMP VERTICAL MF 6 L/H @ 7 BAR IN PP W/OR EPDM
DG330A	POMPA DOSATRICE VERTICALE CL 2 L/H A 15 BAR IN PP CON OR IN EPDM	METERING PUMP VERTICAL CL 2 L/H @ 15 BAR PP W/OR EPDM
DG334A	POMPA DOSATRICE VERTICALE CL 6 L/H A 7 BAR IN PP CON OR IN EPDM	METERING PUMP VERTICAL CL 6 L/H @ 7 BAR PP W/OR EPDM
DG400A	STAZIONE DI DOSAGGIO ASSEMBLATA 50 LITRI CON OR IN EPDM	DOSING SYSTEM ASSEMBLY 50 LITERS W/OR EPDM
DG402A	STAZIONE DI DOSAGGIO ASSEMBLATA 120 LITRI CON OR IN EPDM	DOSING SYSTEM ASSEMBLY 120 LITERS W/OR EPDM
DG404A	STAZIONE DI DOSAGGIO ASSEMBLATA 250 LITRI CON OR IN EPDM	DOSING SYSTEM ASSEMBLY 250 LITERS W/OR EPDM
DG430A	LANCIA DI ASPIRAZIONE L=63 CM CON OR IN EPDM	SUCTION LANCE L=63 CM W/OR EPDM
DG434A	LANCIA DI ASPIRAZIONE L=108 CM CON OR IN EPDM	SUCTION LANCE L=108 CM W/OR EPDM
DG452A	TUBO IN PVDF 6X4 IN ROTOLO L=50 M	PVDF TUBE 6X4 ROLL L=50 M
DG461	KIT MANUTENZ. POMPA DOS. ORIZZONTALE IN PP CON OR IN EPDM	MAINTENANCE KIT ASSY METERING PUMP HORIZONTAL PVDF -ORING EPDM
DG461A	KIT MANUTENZ. POMPA DOS. ORIZZ. IN PVDF CON OR IN EPDM AUTODEGASANTE	MAINTENANCE KIT ASSY METERING PUMP HORIZ. PVDF W/OR EPDM SELF-VENTING
DG463	KIT MANUTENZ. POMPA DOS. VERTICALE IN PP CON OR IN EPDM	MAINTENANCE KIT ASSY METERING PUMP VERTICAL PVDF -ORING EPDM
DG463A	KIT MANUTENZ. POMPA DOS. VERT. IN PVDF CON OR IN EPDM AUTODEGASANTE	MAINTENANCE KIT ASSY METERING PUMP VERT. PVDF W/OR EPDM SELF-VENTING
DG490	CONTATORE LANCIA IMPULSI CON QUADRANTE ASCIUTTO 15 MM	TURBINE PULSE EMITTER WATER METER W/DRY DIAL 15 MM
DG491	CONTATORE LANCIA IMPULSI CON QUADRANTE ASCIUTTO 20 MM	TURBINE PULSE EMITTER WATER METER W/DRY DIAL 20 MM
DG492	CONTATORE LANCIA IMPULSI CON QUADRANTE ASCIUTTO 25 MM	TURBINE PULSE EMITTER WATER METER W/DRY DIAL 25 MM
DG493	CONTATORE LANCIA IMPULSI CON QUADRANTE ASCIUTTO 30 MM	TURBINE PULSE EMITTER WATER METER W/DRY DIAL 30 MM
DG494	CONTATORE LANCIA IMPULSI CON QUADRANTE ASCIUTTO 40 MM	TURBINE PULSE EMITTER WATER METER W/DRY DIAL 40 MM
DG495	CONTATORE LANCIA IMPULSI CON QUADRANTE ASCIUTTO 50 MM	TURBINE PULSE EMITTER WATER METER W/DRY DIAL 50 MM
EA171	GUARNIZIONE EPDM VICTAULIC CAST IRON 1" P. (33,7 MM)	EPDM SEAL VICTAULIC CAST IRON 1" P. (33,7 MM)
EA172	GUARNIZIONE EPDM VICTAULIC CAST IRON 1 1/4" P. (42,4 MM)	EPDM SEAL VICTAULIC CAST IRON 1 1/4" P. (42,4 MM)
EA173	GUARNIZIONE EPDM VICTAULIC CAST IRON 1 1/2" P. (48,3 MM)	EPDM SEAL VICTAULIC CAST IRON 1 1/2" P. (48,3 MM)
EA174	GUARNIZIONE EPDM VICTAULIC CAST IRON 2" P. (60,3 MM)	EPDM SEAL VICTAULIC CAST IRON 2" P. (60,3 MM)
EA175	GUARNIZIONE EPDM VICTAULIC CAST IRON 2 1/2" P. (73,0 MM)	EPDM SEAL VICTAULIC CAST IRON 2 1/2" P. (73,0 MM)
EA177	GUARNIZIONE EPDM VICTAULIC CAST IRON 3" P. (88,9 MM)	EPDM SEAL VICTAULIC CAST IRON 3" P. (88,9 MM)
EA180	GUARNIZIONE EPDM VICTAULIC AISI 304 3/4" P. (26,7 MM)	EPDM SEAL VICTAULIC AISI 304 3/4" P. (26,7 MM)
EA181	GUARNIZIONE EPDM VICTAULIC AISI 304 1" P. (33,7 MM)	EPDM SEAL VICTAULIC AISI 304 1" P. (33,7 MM)
EA182	GUARNIZIONE EPDM VICTAULIC AISI 304 1 1/4" P. (42,4 MM)	EPDM SEAL VICTAULIC AISI 304 1 1/4" P. (42,4 MM)
EA183	GUARNIZIONE EPDM VICTAULIC AISI 304 1 1/2" P. (48,3 MM)	EPDM SEAL VICTAULIC AISI 304 1 1/2" P. (48,3 MM)
EA184	GUARNIZIONE EPDM VICTAULIC AISI 304 2" P. (60,3 MM)	EPDM SEAL VICTAULIC AISI 304 2" P. (60,3 MM)
EA185	GUARNIZIONE EPDM VICTAULIC AISI 304 2 1/2" P. (73,0 MM)	EPDM SEAL VICTAULIC AISI 304 2 1/2" P. (73,0 MM)
EA186	GUARNIZIONE EPDM VICTAULIC AISI 304 3" OD P. (76,1 MM)	EPDM SEAL VICTAULIC AISI 304 3" OD P. (76,1 MM)
EA187	GUARNIZIONE EPDM VICTAULIC AISI 304 3" P. (88,9 MM)	EPDM SEAL VICTAULIC AISI 304 3" P. (88,9 MM)
EA197	GIUNTO TIPO VICT.AISI 304 1200 PSI -4" (114,3 MM)	COUPLING TYPE VICT. AISI 304 1200 PSI -4" (114,3 MM)
EA340	8" ADAPTER ABS D. 1,44" X 1,125" MALE CON O-RING P/N 10125	8" ADAPTER ABS D. 1,44" X 1,125" MALE WHIT O-RING P/N 10125
EA341	8" ADAPTER ABS D. 1,44" X 1,50" MALE CON O-RING P/N 10128	8" ADAPTER ABS D. 1,44" X 1,50" MALE WITH O-RING P/N 10128
EA356	PWT SEAL P/N 10181	PWT SEAL P/N 10181
EA364	FEED/CONCENTRATE PORT "E SERIES" 1000 PSI P/N 20104-1	FEED/CONCENTRATE PORT "E SERIES" 1000 PSI P/N 20104-1
EA365	THRUST CONE "E & P SERIES" 250-1000 PSI P/N 10193	THRUST CONE "E & P SERIES" 250-1000 PSI P/N 10193
EA374	SADDLE "E & P SERIES" 250-1000 PSI P/N 10141	SADDLE "E & P SERIES" 250-1000 PSI P/N 10141

EA393	HEAD ASSEMBLY H "E SERIES" 400-450 PSI (P/N 70532)	HEAD ASSEMBLY H "E SERIES" 400-450 PSI (P/N 70532)
EA395	HEAD ASSEMBLY H "E SERIES" 1000-1200 PSI (P/N 70534)	HEAD ASSEMBLY H "E SERIES" 1000-1200 PSI (P/N 70534)
EA557	GIUNTO TIPO VICT.NYLON 150 PSI -6" (168,3 MM) - DN150	VICT. COUPLING NYLON 150 PSI-6" (168,3 MM) - DN150
FA009	GUARNIZIONE PIANA PER CART.CBC - D.30X50 SP-2 MM - EPDM	EPDM PLANE GASKET D.30X50 THICKNESS 2 MM FOR CBC CARTRIDGE
FA060	CARTUCCIA LAVABILE NYLON CLA 60	WASHABLE NYLON CARTRIDGE CLA 60
FA060G	GUARNIZIONE PIANA PER CARTUCCIA FA060	PLANE GASKET FOR FA060 CARTRIDGE
FAEF2001	MONOCARTUCCIA PP 20" 1 MICRON PER MWG EUROFLOW	MONOCARTRIDGE PP 20" 1 MICRON FOR MGW EUROFLOW
FAEF2005	MONOCARTUCCIA PP 20" 5 MICRON PER MWG EUROFLOW	MONOCARTRIDGE PP 20" 5 MICRON FOR MGW EUROFLOW
FAEF2010	MONOCARTUCCIA PP 20" 10 MICRON PER MWG EUROFLOW	MONOCARTRIDGE PP 20" 10 MICRON FOR MGW EUROFLOW
FAEF2020	MONOCARTUCCIA PP 20" 20 MICRON PER MWG EUROFLOW	MONOCARTRIDGE PP 20" 20 MICRON FOR MGW EUROFLOW
FAEF2050	MONOCARTUCCIA PP 20" 50 MICRON PER MWG EUROFLOW	MONOCARTRIDGE PP 20" 50 MICRON FOR MGW EUROFLOW
FAEF20C1	MONOCARTUCCIA PP 20" 100 MICRON PER MWG EUROFLOW	MONOCARTRIDGE PP 20" 100 MICRON FOR MGW EUROFLOW
FAEF20C2	MONOCARTUCCIA PP 20" 200 MICRON PER MWG EUROFLOW	MONOCARTRIDGE PP 20" 200 MICRON FOR MWG EUROFLOW
FAEF20CL	MONOCARTUCCIA PP 20" 150 MICRON PER MWG EUROFLOW	MONOCARTRIDGE PP 20" 150 MICRON FOR MWG EUROFLOW
FAEF4001	MONOCARTUCCIA PP 40" 1 MICRON PER MWG EUROFLOW	MONOCARTRIDGE PP 40" 1 MICRON FOR MGW EUROFLOW
FAEF4005	MONOCARTUCCIA PP 40" 5 MICRON PER MWG EUROFLOW	MONOCARTRIDGE PP 40" 5 MICRON FOR MGW EUROFLOW
FAEF4010	MONOCARTUCCIA PP 40" 10 MICRON PER MWG EUROFLOW	MONOCARTRIDGE PP 40" 10 MICRON FOR MGW EUROFLOW
FAEF4020	MONOCARTUCCIA PP 40" 20 MICRON PER MWG EUROFLOW	MONOCARTRIDGE PP 40" 20 MICRON FOR MGW EUROFLOW
FAEF4050	MONOCARTUCCIA PP 40" 50 MICRON PER MWG EUROFLOW	MONOCARTRIDGE PP 40" 50 MICRON FOR MGW EUROFLOW
FAEF40C1	MONOCARTUCCIA PP 40" 100 MICRON PER MWG EUROFLOW	MONOCARTRIDGE PP 40" 100 MICRON FOR MGW EUROFLOW
FAEF40C2	MONOCARTUCCIA PP 40" 200 MICRON PER MWG EUROFLOW	MONOCARTRIDGE PP 40" 200 MICRON FOR MWG EUROFLOW
FAEF40CL	MONOCARTUCCIA PP 40" 150 MICRON PER MWG EUROFLOW	MONOCARTRIDGE PP 40" 150 MICRON FOR MWG EUROFLOW
FB040	CONTENITORE FILTRO MOD. CFH 3X20" AISI 316L-2" M	FILTER HOUSING MOD. CFH 3X20" AISI 316L-2" M
FB040A	CONTENITORE FILTRO MOD. CFH 3X20" AISI 316L- DN 50	FILTER HOUSING MOD. CFH 3X20" AISI 316L-DN 50
FB040G	GUARNIZIONE SAGOMATA IN EPDM PER FILTRO CFH3x20-30-40	EPDM SHAPED SEAL FOR FILTER CFH 3x20-30-40
FB040H	GUARNIZIONE SAGOMATA IN VITON PER FILTRO CFH 3X20-30-40	VITON SHAPED SEAL FOR FILTER CFH 3X20-30-40
FB040V	CHIUSURA V-CLAMP AISI 304 PER FILTRO CFH 3X20-30-40	AISI 304 V-CLAMP CLOSURE FOR FILTER 3x20-30-40
FB041	CONTENITORE FILTRO MOD. CFH 3X30" AISI 316L-2" M	FILTER HOUSING MOD. CFH 3X30" AISI 316L-2" M
FB041/1	CONTENITORE FILTRO MOD. CFH 3x40" AISI 316L-2" M	FILTER HOUSING MOD. CFH 3X40" AISI 316L-2" M
FB041/1A	CONTENITORE FILTRO MOD. CFH 3x40" AISI 316L-DN 50	FILTER HOUSING MOD. CFH 3X40" AISI 316L-DN 50
FB041A	CONTENITORE FILTRO MOD. CFH 3X30" AISI 316L- DN 50	FILTER HOUSING MOD. CFH 3X30" AISI 316L-DN 50
FB042	CONTENITORE FILTRO MOD. CFH 7X20" AISI 316L-2.1/2" M	FILTER HOUSING MOD. CFH 7X20" AISI 316L-2,1/2" M
FB042A	CONTENITORE FILTRO MOD. CFH 7X20" AISI 316L-DN 65	FILTER HOUSING MOD. CFH 7X20" AISI 316L-DN 65
FB042G	GUARNIZIONE SAGOMATA IN EPDM PER FILTRO CFH7x20-30-40	EPDM SHAPED SEAL FOR FILTER CFH 7x20-30-40
FB042V	CHIUSURA V-CLAMP AISI 304 PER FILTRO CFH 7X20-30-40	AISI 304 V-CLAMP CLOSURE FOR FILTER CFH 7x20-30-40
FB043	CONTENITORE FILTRO MOD. CFH 7X30" AISI 316L-2.1/2" M	FILTER HOUSING MOD. CFH 7X30" AISI 316L-2,1/2" M
FB043A	CONTENITORE FILTRO MOD. CFH 7X30" AISI 316L-DN 65	FILTER HOUSING MOD. CFH 7X30" AISI 316L-DN 65
FB044	CONTENITORE FILTRO MOD. CFH 7X40" AISI 316L-2.1/2" M	FILTER HOUSING MOD. CFH 7X40" AISI 316L-2,1/2" M
FB044A	CONTENITORE FILTRO MOD.CFH 7X40" AISI 316L-DN 65	FILTER HOUSING MOD. CFH 7X40" AISI 316L-DN 65
FB045G	GUARNIZIONE O-RING IN EPDM PER FILTRO CFH15x30-40	EPDM SHAPED SEAL FOR FILTER CFH 15x20-30-40
FB046	CONTENITORE FILTRO MOD. CFH15X40" AISI 316L-DN 100	FILTER HOUSING MOD. CFH 15X40" AISI 316L-DN 100
FB046/1	CONTENITORE FILTRO MOD. CFH 22X40" AISI 316L-DN 150	FILTER HOUSING MOD. CFH 2X40" AISI 316L-DN 150
FB075	DISTANZIALE PVC PER FILTRO OTS 1.1/4"-2"	PVC SPACER FOR FILTER OTS 1,1/4"-2"
FB200	FILTRO OTC-12 IN OTTONE CROMATO CON CARTUCCIA NYLON 60	OTC-12 FILTER BRASS WITH NYLON CARTRIDGE 60
FB201	FILTRO OTC-34 IN OTTONE CROMATO CON CARTUCCIA NYLON 60	OTC-34 FILTER BRASS WITH NYLON CARTRIDGE 60
FB202	FILTRO OTC-1 IN OTTONE CROMATO CON CARTUCCIA NYLON 60	OTC-1 FILTER BRASS WITH NYLON CARTRIDGE 60
FB203	FILTRO OTC-114 IN OTTONE CROMATO CON CARTUCCIA NYLON 60	OTC-114 FILTER BRASS WITH NYLON CARTRIDGE 60
FB204	FILTRO OTC-112 IN OTTONE CROMATO CON CARTUCCIA INOX 60	OTC-112 FILTER BRASS WITH NYLON CARTRIDGE 60
FB204B	FILTRO OTC-112 IN OTTONE CROMATO CON CARTUCCIA INOX 100	OTC-112 FILTER BRASS WITH INOX CARTRIDGE 100
FB204C	FILTRO OTC-112 IN OTTONE CROMATO CON CARTUCCIA INOX 200	OTC-112 FILTER BRASS WITH INOX CARTRIDGE 200
FB205	FILTRO OTC-2 IN OTTONE CROMATO CON CARTUCCIA INOX 60	OTC-2 FILTER BRASS WITH NYLON CARTRIDGE 60
FB205B	FILTRO OTC-2 IN OTTONE CROMATO CON CARTUCCIA INOX 100	OTC-2 FILTER BRASS WITH INOX CARTRIDGE 100
FB207	FILTRO OTC-1 W/O C IN OTTONE CROMATO	OTC-1 FILTER BRASS W/O
FB208	FILTRO OTC-114 W/O C IN OTTONE CROMATO	OTC-114 FILTER BRASS W/O
FB210	FILTRO AOTC-12 IN OTTONE CROMATO CON CARTUCCIA INOX 60	AOTC-12 FILTER BRASS WITH INOX CARTRIDGE 60
FB210A	FILTRO AOTC-12 IN OTTONE CROMATO CON CARTUCCIA INOX 25	AOTC-12 FILTER BRASS WITH INOX CARTRIDGE 25
FB210B	FILTRO AOTC-12 IN OTTONE CROMATO CON CARTUCCIA INOX 100	AOTC-12 FILTER BRASS WITH INOX CARTRIDGE 100
FB211	FILTRO AOTC-34 IN OTTONE CROMATO CON CARTUCCIA INOX 60	AOTC-34 FILTER BRASS WITH INOX CARTRIDGE 60
FB211A	FILTRO AOTC-34 IN OTTONE CROMATO CON CARTUCCIA INOX 25	AOTC-34 FILTER BRASS WITH INOX CARTRIDGE 25
FB211B	FILTRO AOTC-34 IN OTTONE CROMATO CON CARTUCCIA INOX 100	AOTC-34 FILTER BRASS WITH INOX CARTRIDGE 100
FB211C	FILTRO AOTC-34 IN OTTONE CROMATO CON CARTUCCIA INOX 200	AOTC-34 FILTER BRASS WITH INOX CARTRIDGE 200
FB211D	FILTRO AOTC-34 IN OTTONE CROMATO CON CARTUCCIA INOX 300	AOTC-34 FILTER BRASS WITH INOX CARTRIDGE 300
FB212	FILTRO AOTC-1 IN OTTONE CROMATO CON CARTUCCIA INOX 60	AOTC-1 FILTER BRASS WITH INOX CARTRIDGE 60
FB212A	FILTRO AOTC-1 IN OTTONE CROMATO CON CARTUCCIA INOX 25	AOTC-1 FILTER BRASS WITH INOX CARTRIDGE 25
FB212B	FILTRO AOTC-1 IN OTTONE CROMATO CON CARTUCCIA INOX 100	AOTC-1 FILTER BRASS WITH INOX CARTRIDGE 100
FB212C	FILTRO AOTC-1 IN OTTONE CROMATO CON CARTUCCIA INOX 200	AOTC-1 FILTER BRASS WITH INOX CARTRIDGE 200
FB212D	FILTRO AOTC-1 IN OTTONE CROMATO CON CARTUCCIA INOX 300	AOTC-1 FILTER BRASS WITH INOX CARTRIDGE 300
FB213	FILTRO AOTC-114 IN OTTONE CROMATO CON CARTUCCIA INOX 60	AOTC-114 FILTER BRASS WITH INOX CARTRIDGE 60
FB213A	FILTRO AOTC-114 IN OTTONE CROMATO CON CARTUCCIA INOX 25	AOTC-114 FILTER BRASS WITH INOX CARTRIDGE 25
FB213B	FILTRO AOTC-114 IN OTTONE CROMATO CON CARTUCCIA INOX 100	AOTC-114 FILTER BRASS WITH INOX CARTRIDGE 100
FB213C	FILTRO AOTC-114 IN OTTONE CROMATO CON CARTUCCIA INOX 200	AOTC-114 FILTER BRASS WITH INOX CARTRIDGE 200
FB213D	FILTRO AOTC-114 IN OTTONE CROMATO CON CARTUCCIA INOX 300	AOTC-114 FILTER BRASS WITH INOX CARTRIDGE 300
FB214	FILTRO AOTC-112 IN OTTONE CROMATO CON CARTUCCIA INOX 60	AOTC-112 FILTER BRASS WITH INOX CARTRIDGE 60
FB214A	FILTRO AOTC-112 IN OTTONE CROMATO CON CARTUCCIA INOX 25	AOTC-112 FILTER BRASS WITH INOX CARTRIDGE 25
FB214B	FILTRO AOTC-112 IN OTTONE CROMATO CON CARTUCCIA INOX 100	AOTC-112 FILTER BRASS WITH INOX CARTRIDGE 100
FB214C	FILTRO AOTC-112 IN OTTONE CROMATO CON CARTUCCIA INOX 200	AOTC-112 FILTER BRASS WITH INOX CARTRIDGE 200
FB214D	FILTRO AOTC-112 IN OTTONE CROMATO CON CARTUCCIA INOX 300	AOTC-112 FILTER BRASS WITH INOX CARTRIDGE 300
FB215	FILTRO AOTC-2 IN OTTONE CROMATO CON CARTUCCIA INOX 60	AOTC-2 FILTER BRASS WITH INOX CARTRIDGE 60
FB215A	FILTRO AOTC-2 IN OTTONE CROMATO CON CARTUCCIA INOX 25	AOTC-2 FILTER BRASS WITH INOX CARTRIDGE 25
FB215B	FILTRO AOTC-2 IN OTTONE CROMATO CON CARTUCCIA INOX 100	AOTC-2 FILTER BRASS WITH INOX CARTRIDGE 100
FB215C	FILTRO AOTC-2 IN OTTONE CROMATO CON CARTUCCIA INOX 200	AOTC-2 FILTER BRASS WITH INOX CARTRIDGE 200
FB215D	FILTRO AOTC-2 IN OTTONE CROMATO CON CARTUCCIA INOX 300	AOTC-2 FILTER BRASS WITH INOX CARTRIDGE 300
FB217	CONTENITORE FILTRO OTC.HW-34	FILTER HOUSING OTC.HW-34
FB217A	CONTENITORE FILTRO OTC HW-34-20"	FILTER HOUSING OTC HW-34-20"
FB218	CONTENITORE FILTRO OTC.HW-1	FILTER HOUSING OTC.HW-1
FB218A	CONTENITORE FILTRO OTC HW-1-20"	FILTER HOUSING OTC HW-1-20"
FB219	CONTENITORE FILTRO OTC.HW-114	FILTER HOUSING OTC.HW-114
FB219A	CONTENITORE FILTRO OTC HW-114-20"	FILTER HOUSING OTC HW-114-20"
FB221	CARTUCCIA LAVABILE NYLON 60 / 12	WASHABLE CARTRIDGE NYLON 60 / 12
FB222	CALZA LAVABILE NYLON 60	WASHABLE SLEEVE NYLON 60
FB224	CARTUCCIA COMPLETA NYLON 60/34-1-114	COMPLETE CARTRIDGE NYLON 60/34-1-114
FB225	CARTUCCIA INOX 25/34-1-114	INOX CARTRIDGE 25/34-1-114
FB226	CARTUCCIA INOX 25/112-2	INOX CARTRIDGE 25/112-2
FB228	CARTUCCIA INOX 60 / 34-1-114	INOX CARTRIDGE 60 / 34-1-114
FB229	CARTUCCIA INOX 60 / 112-2	INOX CARTRIDGE 60 / 112-2
FB230	CARTUCCIA INOX 100/ 12	INOX CARTRIDGE 100/ 12
FB231	CARTUCCIA INOX 100/ 34 - 1 - 114	INOX CARTRIDGE 100/ 34 - 1 - 114
FB232	CARTUCCIA INOX 100/ 112 - 2	INOX CARTRIDGE 100/ 112 - 2
FB234	CARTUCCIA INOX 200/ 34 - 1 - 114	INOX CARTRIDGE 200/ 34 - 1 - 114

FB235	CARTUCCIA INOX 200/112 - 2	INOX CARTRIDGE 200/112 - 2
FB237	CARTUCCIA INOX 300/34 - 1 - 114	INOX CARTRIDGE 300/34 - 1 - 114
FB238	CARTUCCIA INOX 300/112 - 2	INOX CARTRIDGE 300/112 - 2
FB239	GUARNIZIONE CARTUCCIA CX1 INOX 112-2	SEAL FOR CARTRIDGE CX1 INOX 112-2
FB239A	GUARNIZIONE CARTUCCIA CX INOX 34-1-114	GASKET FOR CARTRIDGE CX INOX 34-1-114
FB240	CARTUCCIA INOX AP 25/12	INOX CARTRIDGE AP 25/12
FB241	CARTUCCIA INOX AP 25/34 - 1 - 114	INOX CARTRIDGE AP 25/34 - 1 - 114
FB242	CARTUCCIA INOX AP 25/112 - 2	INOX CARTRIDGE AP 25/112 - 2
FB243	CARTUCCIA INOX AP 60/12	INOX CARTRIDGE AP 60/12
FB244	CARTUCCIA INOX AP 60/34 - 1 - 114	INOX CARTRIDGE AP 60/34 - 1 - 114
FB245	CARTUCCIA INOX AP 60/112 - 2	INOX CARTRIDGE AP 60/112 - 2
FB246	CARTUCCIA INOX AP 100/12	INOX CARTRIDGE AP 100/12
FB247	CARTUCCIA INOX AP 100/34 - 1 - 114	INOX CARTRIDGE AP 100/34 - 1 - 114
FB248	CARTUCCIA INOX AP 100/112 - 2	INOX CARTRIDGE AP 100/112 - 2
FB250	CARTUCCIA INOX AP 200/34 - 1 - 114	INOX CARTRIDGE AP 200/34 - 1 - 114
FB251	CARTUCCIA INOX AP 200/112 - 2	INOX CARTRIDGE AP 200/112 - 2
FB253	CARTUCCIA INOX AP 300/34 - 1 - 114	INOX CARTRIDGE AP 300/34 - 1 - 114
FB254	CARTUCCIA INOX AP 300/112 - 2	INOX CARTRIDGE AP 300/112 - 2
FB255	GUARNIZIONE CARTUCCIA INOX AP 34-1-114	SEAL FOR CARTRIDGE CX1 INOX 112-2
FB256	GUARNIZIONE CARTUCCIA INOX AP 112-2	SEAL FOR CARTRIDGE INOX AP 112-2
FB260	VASO TROGAMIT OTC 12	TROGAMIT BOWL OTC-12
FB261	VASO TROGAMIT OTC 34 -1 - 114	TROGAMIT BOWL OTC 34-1-114
FB262	VASO TROGAMIT OTC 112 - 2	TROGAMIT BOWL OTC 112-2
FB263	VASO TROGAMIT AOTC 12	TROGAMIT BOWL AOTC 12
FB264	VASO TROGAMIT AOTC 34 - 1 - 114	TROGAMIT BOWL AOTC 34-1-114
FB266	VASO TROGAMIT AOTC 112 - 2	TROGAMIT BOWL AOTC 112-2
FB267	VASO INOX 10" PER OTC-HW P/N 100007	INOX 102 BOWL FOR OTC-HW P/N 100007
FB268	VALVOLA DI SCARICO AOTC 34-1-114 (PEL 006)	DRAIN VALVE AOTC 34-1-114 (PEL 006)
FB269	VALVOLA DI SCARICO AOTC 112-2 (PEL 007)	DRAIN VALVE AOTC 112-2 (PEL 007)
FB282	KIT CHIUSURA A CLAMP OTC/AOTC/ DP 34 - 1 - 114	CLAMP CLOSURE KIT OTC/AOTC/ DP 34 - 1 - 114
FB283	KIT CHIUSURA A CLAMP OTC/AOTC 112 - 2	CLAMP CLOSURE KIT OTC/AOTC/ DP 112-2
FB286	GUIDA DI CENTRAGGIO AOTC 34 - 1 - 114	GUIDING AOTC 34 - 1- 114
FB287	ANELLO INFERIORE AOTC 34 - 1 - 114	BOTTOM RING AOTC 34 - 1 -114
FB288	GUIDA DI CENTRAGGIO AOTC 112 - 2	GUIDING AOTC 112 - 2
FB289	ANELLO INFERIORE AOTC 112 - 2	BOTTOM RING AOTC 112 - 2
FB290	O-RING PER VASO OTC/AOTC 12	BOWL O-RIN FOR OTC/AOTC 12
FB291	O-RING PER VASO OTC/AOTC/DP 34 - 1 - 114	BOWL O-RING FOR OTC/AOTC/DP 34 - 1 - 114
FB292	O-RING PER VASO OTC/AOTC/DP 112-2	BOWL O-RING FOR OTC/AOTC/DP 112 - 2
FB293	KIT BOCCHETTONI 3/4"	PIPE UNION KIT 3/4"
FB294	KIT BOCCHETTONI 1"	PIPE UNION KIT 1"
FB295	KIT BOCCHETTONI 1" 1/4	PIPE UNION KIT 1"1/4
FB296	VALVOLINA DI SFIATO	PURGE VALVE
FB297	O-RING PER VASO OTC HW 34-1-114	O-RING FOR VASO OTC HW 34-1-114
FB299A	MANOMETRO AOTC 112-2	AOTC 112-2 MANOMETER
FB299B	MANOMETRO AOTC 1/2-3/4-1-1 1/4	AOTC 1/2-3/4-1-1 1/4 MANOMETER
FB300	DOSATORE DI POLIFOSFATO DP 12 OR	POLYPHOSPHATE FEEDER DP 12 OR
FB301	DOSATORE DI POLIFOSFATO 12 OR-BYPASS	POLYPHOSPHATE FEEDER DP 12 OR-BYPASS
FB302	DOSATORE DI POLIFOSFATO DP 34 OR	POLYPHOSPHATE FEEDER DP 34 OR
FB303	DOSATORE DI POLIFOSFATO DP 1 OR	POLYPHOSPHATE FEEDER DP 1 OR
FB304	DOSATORE DI POLIFOSFATO DP 114 OR	POLYPHOSPHATE FEEDER DP 114 OR
FB305	DOSATORE POLIFOSFATO DP5 34 OR	POLYPHOSPHATE FEEDER DP5 34 OR
FB309	BICCHIERE DP5 34-1-114	BOWL DP5 34-1-114
FB310	BICCHIERE DP 12	BOWL DP 12
FB311	BICCHIERE DP 34 - 1- 114	BOWL DP 34 - 1 - 114
FB313	SOFFIETTO DP 34 - 1 -114 lung. 200 MM	FOLDING DP 34 - 1 -114 lung. 200 MM
FB314	SOFFIETTO PER FB305 - DP5 34 OR	FOLDING FOR FB305 - DP5 34 OR
FB317	CHIAVE PER FB702	SPANNER FOR FB702
FB320	TE DP 34 - 1	TE DP 34 - 1
FB322	O RING INTERNI DP 12	INTERNAL O-RINGS DP 12
FB323	O RING INTERNI DP 34 - 1 - 114	INTERNAL O-RINGS DP 34 - 1 - 114
FB327	EIETTORE DP 34 - 1 - 114	EJECTOR DP 34 - 1 - 114
FB329	DADO PER TE DP 34 - 1 -114	TE NUT DP 34 - 1 -114
FB359A	ANELLO TENUTA SACCO 7" FILTRI HXP-BF	HXP-BF FILTER BAG SEAL RING
FB365	O- RING 3" EPDM X CODOLI HPCF D.90	3" EPDM O-RING FOR HPCF D.90 MANIFOLDS
FB380	CARTUCCIA PLEATED PP DLHF620PP40E	PLEATED CARTRIDGE PP DLHF620PP40E
FB422	SET N. 5 CALZE DI RICAMBIO 25 MICRONS NW 18	N. 5 SPARE SLEEVES KIT 25 MICRONS NW 18
FB431	SET N. 5 CALZE DI RICAMBIO 5 MICRONS NW 32	N. 5 SPARE SLEEVES KIT 5 MICRONS NW 32
FB432	SET N. 5 CALZE DI RICAMBIO 10 MICRONS NW 32	N. 5 SPARE SLEEVES KIT 10 MICRONS NW 32
FB436	SET N. 5 CALZE DI RICAMBIO 150 MICRONS NW 32	N. 5 SPARE SLEEVES KIT 150 MICRONS NW 32
FB439C	SET N. 5 CALZE DI RICAMBIO 25 MICRON NW 280	N. 5 SPARE SLEEVES KIT 25 MICRON NW 280
FB439D	SET N. 5 CALZE DI RICAMBIO 25 MICRON NW 340	N. 5 SPARE SLEEVES KIT 25 MICRON NW 340
FB441C	SET N. 5 CALZE DI RICAMBIO 100 MICRON NW 280	N. 5 SPARE SLEEVES KIT 100 MICRON NW 280
FB451	TURBINA NW18/25/32 REF.02	TURBINE NW18/25/32 REF.02
FB453	ARMATURA SUPPORTO SETTO FILTRANTE NW25 REF.04	SUPPORT ARMOR NW25 REF.04
FB454	ARMATURA SUPPORTO SETTO FILTRANTE NW32 REF.05	SUPPORT ARMOR NW32 REF.05
FB455	COPERCHIO CHIUSURA CARTUCCIA NW18/25/32 REF.06	CARTRIDGE CLOSURE CAP NW18/25/32 REF.06
FB460	O-RING TESTA NW 18/25/32 REF 11	HEAD O-RING NW18/25/32 REF. 11
FB461	O-RING RACCORDO NW 18/25/32 REF 12	MANIFOLD O-RING NW18/25/32 REF. 12
FB462	KIT RACCORDO DI SFIATO/DRENAGGIO NW18/25/32 REF.13	PURGE/DRAIN FITTING KIT NW18/25/32 REF. 13
FB464	VASO TRASPARENTE NW25 REF.15	TRANSPARENT BOWL NW25 REF. 15
FB465	VASO TRASPARENTE NW32 REF.16	TRANSPARENT BOWL NW32 REF. 16
FB469	KIT DIFFUSORI NW32 REF.20	DIFFUSER KIT NW32 REF. 20
FB471	VALVOLA DI SCARICO A SFERA 1/4" NW 18/25/32 REF22	DRINE BALL VALVE 1/4" NW 18/25/32 REF 22
FB475	STAFFA DI FISSAGGIO SINGOLA IN AISI NW280/340/400	STAINLESS STEEL WALL FIXATION NW280/340/400
FB480A	TESTA FILTRO NW500/650 REF.50	FILTER HEAD NW500/650 REF. 50
FB480C	TESTA FILTRO NW280/340/400	NW280/340/400 FILTER HEAD
FB483A	TURBINA + VITE DI FISSAGGIO NW500/650/800 REF. 52	TURBINE + FIXING SCREW NW500/650/800 REF. 52
FB485A	COPERCHIO CHIUSURA CARTUCCIA NW500/650/800 REF. 54	CARTRIDGE CLOSURE CAP NW500/650/800 REF.54
FB486A	O-RING TESTA NW500/650/800 REF. 55	HEAD O-RING NW500/650/800 REF. 55
FB488A	VASO TRASPARENTE NW500/650/800 REF. 56	TRANSPARENT BOWL NW500/650/800 REF. 56
FB490A	KIT DIFFUSORI NW500/650/800 REF. 59	DIFFUSER KIT NW500/650/800 REF. 59
FB491A	ADATTATORE VALVOLA DI SCARICO CON O-RING NW500/650/800 REF. 60	DRAIN VALVE ADAPTER W/O-RING NW500/650/800 REF. 60
FB491B	VALVOLA DI SCARICO A SFERA 3/4" NW500/650/800 REF. 61	DRAIN BALL VALVE 3/4" NW500/650/800 REF. 61
FB492C	MANOMETRO 1/4" SCALA 0÷20 BAR NW280/340/400/500/650/800	NW280/340/400/500/650/800 1/4" PRESSURE GAUGE 0÷20 BAR
FB494A	KIT RACCORDI PLASTICA GHIERA+CODOLO 2" MASCHIO NW500 REF. 63	KIT PLASTIC NUT + 2" MALE MANIFOLD NW500 REF. 63
FB497A	STAFFA DI FISSAGGIO SINGOLA IN S.S. NW500/650/800 REF. 66	SINGLE S.S MOUNTING BRACKET NW500/650/800 REF. 66
FB497C	STAFFA DI FISSAGGIO SINGOLA IN AISI NW280/340/400	STAINLESS STEEL WALL FIXATION NW280/340/400
FB499	O-RING RACCORDI CONNESSIONI NW500/650 REF.70	MANIFOLD O-RING CONNECTIONS NW500/650 REF. 70
FB499A	O-RING RACCORDI CONNESSIONI NW800 REF.71	MANIFOLD O-RING CONNECTIONS NW800 REF. 71

FB499C	O-RING RACCORDI CONNESSIONI NW280/340/400	O-RING FOR NW280/340/400 CONNECTIONS
FB575	TIRANTE 20"	20" ROD
FB576	TIRANTE 30"	30" ROD
FB577	TIRANTE 40"	40" ROD
FB700	DOSATORE POLIFOSFATO DPC 12	POLYPHOSPHATE FEEDED DPC 12
FB701	DOSATORE POLIFOSFATO DPC 12 SFERICO	POLYPHOSPHATE FEEDED DPC 12 SPHERIC
FB702	DOSATORE POLIFOSFATO DPC 12 - 34	POLYPHOSPHATE FEEDED DPC 12-34
FB730	CARTUCCIA DI RICAMBIO PER DPC 12	SPARE CARTRIDGE FOR DPC 12
FB731	CARTUCCIA DI RICAMBIO PER DPC 12 SFERICO	REPLACEMENT CARTRIDGE FOR DPC 12 SFERIC
FB732	N.2 CARTUCCE DI RICAMBIO PER DPC 12 - 34	N. 2 REPLACEMENT CARTRIDGE FOR DPC 12 - 34
FBEF20S3	CONTENITORE MWG EUROFLOW MONOCART.20" FRP 150PSI SP 3" VICT.	MWG FILTER HOUSING EUROFLOW MONOCART.20" FRP 150PSI SP 3" VICT.
FBEF40S3	CONTENITORE MWG EUROFLOW MONOCART.40" FRP 150PSI SP 3" VICT.	MWG FILTER HOUSING EUROFLOW MONOCART.40" FRP 150PSI SP 3" VICT.
FBEFR13	TIRANTE PER MWG EUROFLOW L=500 MM	MWG EUROFLOW STRAP L=500 MM
FBEFR15	THRUST CONE PER MWG EUROFLOW	MWG EUROFLOW THRUST CONE
FBEFR17	GUIDA DI CENTRAGGIO PER MWG EUROFLOW	MWG EUROFLOW GUIDING RING
FBEFR21	TAPPO CON MANIGLIA PER MWG EUROFLOW	MWG EUROFLOW HANDLED CLOSURE
FBEFR23	TESTA DI CONNESSIONE PER MWG EUROFLOW	MWG EUROFLOW END CAP WITH CONNECTION
FBEFR27	KIT DI CHIUSURA PER MWG EUROFLOW	MWG EUROFLOW LOCKING KIT SEGMENT
FBS0320FL	CONTENITORE FILTRO MWG FBS 3X20" AISI 316L FLANG 2" ASME B16.5 CLAS150	MWG FILTER HOUSING FBS 3x20" AISI 316L FLANG 2" ASME B16.5 CLAS150
FBS0330FL	CONTENITORE FILTRO MWG FBS 3X30" AISI 316L FLANG 2" ASME B16.5 CLAS150	MWG FILTER HOUSING FBS 3x30" AISI 316L FLANG 2" ASME B16.5 CLAS150
FBS0340FL	CONTENITORE FILTRO MWG FBS 3X40" AISI 316L FLANG 2" ASME B16.5 CLAS150	MWG FILTER HOUSING FBS 3x40" AISI 316L FLANG 2" ASME B16.5 CLAS150
FBS0520FL	CONTENITORE FILTRO MWG FBS 5X20" AISI 316L FLANG 2" ASME B16.5 CLAS150	MWG FILTER HOUSING FBS 5x20" AISI 316L FLANG 2" ASME B16.5 CLAS150
FBS0530FL	CONTENITORE FILTRO MWG FBS 5X30" AISI 316L FLANG 2" ASME B16.5 CLAS150	MWG FILTER HOUSING FBS 5x30" AISI 316L FLANG 2" ASME B16.5 CLAS150
FBS0540FL	CONTENITORE FILTRO MWG FBS 5X40" AISI 316L FLANG 2" ASME B16.5 CLAS150	MWG FILTER HOUSING FBS 5x40" AISI 316L FLANG 2" ASME B16.5 CLAS150
FBS0720	CONTENITORE FILTRO MWG FBS 7X20" AISI 316L 2.5" BSP M	MWG FILTER HOUSING FBS 7x20" AISI 316L 2.5" BSP M
FBS0730	CONTENITORE FILTRO MWG FBS 7X30" AISI 316L 2.5" BSP M	MWG FILTER HOUSING FBS 7x30" AISI 316L 2.5" BSP M
FBS0740	CONTENITORE FILTRO MWG FBS 7X0" AISI 316L 2.5" BSP M	MWG FILTER HOUSING FBS 7x40" AISI 316L 2.5" BSP M
FBSR01	O-RING EPDM CHIUSURA FILTRI MWG MOD. FBS 3 E 5 ELEM.	EPDM CLOSURE O-RING EPDM MWG FILTER MOD. FBS 3 - 5 ELEM
FBSR03	O-RING EPDM CHIUSURA FILTRO MWG MOD. FBS 7 ELEM.	EPDM CLOSURE O-RING EPDM MWG FILTER MOD. FBS 7 ELEM
FBSR05	O-RING EPDM CHIUSURA FILTRO MWG MOD. FBS 15 ELEM.	EPDM CLOSURE O-RING EPDM MWG FILTER MOD. FBS 15 ELEM
FBSR07	O-RING EPDM CHIUSURA FILTRO MWG MOD. FBS 20 ELEM.	EPDM CLOSURE O-RING EPDM MWG FILTER MOD. FBS 20 ELEM
FBSR11	DADO IN AISI PER FILTRI MWG MOD. FBS	NUT IN AISI FOR MWG FILTERS FBS MODEL
FBTT1010T	CONTENITORE TRIPLO FILTRO 3 PEZZI L=10" - 1" VASO TRASPARENTE	TRIPLEX THREE PIECES FILTER HOUSING L=10" - 1" CLEAR BOWL
FVA18332-1	BLFC ASSEMBLY 1600-1 GPM	BLFC ASSEMBLY 1600-1 GPM
FVA24107	METER ASSY 3/4" 8 M3 PLASTIC	METER ASSY 3/4" 8 M3 PLASTIC
H2R005	2.5" MPV STRAP FOR 1000 PSI L=170 MM	2.5" MPV STRAP FOR 1000 PSI L=170 MM
H410B1	RO VESSEL FRP 4" SIDE-PORT 300 PSI 4040 1C5C - 1/2" BSPT F	RO VESSEL FRP 4" SIDE-PORT 300 PSI 4040 1C5C - 1/2" BSPT F
H410B2	RO VESSEL FRP 4" SIDE-PORT 300 PSI 2EL 1C5C - 1/2" BSPT F	RO VESSEL FRP 4" SIDE-PORT 300 PSI 2EL 1C5C - 1/2" BSPT F
H410B3	RO VESSEL FRP 4" SIDE-PORT 300 PSI 3EL 1C5C - 1/2" BSPT F	RO VESSEL FRP 4" SIDE-PORT 300 PSI 3EL 1C5C - 1/2" BSPT F
H410B4	RO VESSEL FRP 4" SIDE-PORT 300 PSI 4EL 1C5C - 1/2" BSPT F	RO VESSEL FRP 4" SIDE-PORT 300 PSI 4EL 1C5C - 1/2" BSPT F
H410D3	RO VESSEL FRP 4" SIDE-PORT 600 PSI 3EL 1C5C - 1/2" BSPT M	RO VESSEL FRP 4" SIDE-PORT 600 PSI 3EL 1C5C - 1/2" BSPT M
H410D5	RO VESSEL FRP 4" SIDE-PORT 600 PSI 5EL 1C5C - 1/2" BSPT M	RO VESSEL FRP 4" SIDE-PORT 600 PSI 5EL 1C5C - 1/2" BSPT M
H410D6	RO VESSEL FRP 4" SIDE-PORT 600 PSI 6EL 1C5C - 1/2" BSPT M	RO VESSEL FRP 4" SIDE-PORT 600 PSI 6EL 1C5C - 1/2" BSPT M
H410G1	RO VESSEL FRP 4" SIDE-PORT 1000 PSI 4040 1C5C - 1/2" BSPT M	RO VESSEL FRP 4" SIDE-PORT 1000 PSI 4040 1C5C - 1/2" BSPT M
H410G2	RO VESSEL FRP 4" SIDE-PORT 1000 PSI 2EL 1C5C - 1/2" BSPT M	RO VESSEL FRP 4" SIDE-PORT 1000 PSI 2EL 1C5C - 1/2" BSPT M
H410G3	RO VESSEL FRP 4" SIDE-PORT 1000 PSI 3EL 1C5C - 1/2" BSPT M	RO VESSEL FRP 4" SIDE-PORT 1000 PSI 3EL 1C5C - 1/2" BSPT M
H410G4	RO VESSEL FRP 4" SIDE-PORT 1000 PSI 4EL 1C5C - 1/2" BSPT M	RO VESSEL FRP 4" SIDE-PORT 1000 PSI 4EL 1C5C - 1/2" BSPT M
H410G6	RO VESSEL FRP 4" SIDE-PORT 1000 PSI 6EL 1C5C - 1/2" BSPT M	RO VESSEL FRP 4" SIDE-PORT 1000 PSI 6EL 1C5C - 1/2" BSPT M
H410H3	RO VESSEL FRP 4" SIDE-PORT 1200 PSI 3EL 1C5C - 1/2" BSPT M	RO VESSEL FRP 4" SIDE-PORT 1200 PSI 3EL 1C5C - 1/2" BSPT M
H410H4	RO VESSEL FRP 4" SIDE-PORT 1200 PSI 4EL 1C5C - 1/2" BSPT M	RO VESSEL FRP 4" SIDE-PORT 1200 PSI 4EL 1C5C - 1/2" BSPT M
H412B1	RO VESSEL FRP 4" SIDE-PORT 300 PSI 4040 1C7C - 1/2" BSPT F	RO VESSEL FRP 4" SIDE-PORT 300 PSI 4040 1C7C - 1/2" BSPT F
H412B2	RO VESSEL FRP 4" SIDE-PORT 300 PSI 2EL 1C7C - 1/2" BSPT F	RO VESSEL FRP 4" SIDE-PORT 300 PSI 2EL 1C7C - 1/2" BSPT F
H412B3	RO VESSEL FRP 4" SIDE-PORT 300 PSI 3EL 1C7C - 1/2" BSPT F	RO VESSEL FRP 4" SIDE-PORT 300 PSI 3EL 1C7C - 1/2" BSPT F
H412B4	RO VESSEL FRP 4" SIDE-PORT 300 PSI 4EL 1C7C - 1/2" BSPT F	RO VESSEL FRP 4" SIDE-PORT 300 PSI 4EL 1C7C - 1/2" BSPT F
H412B5	RO VESSEL FRP 4" SIDE-PORT 300 PSI 5EL 1C7C - 1/2" BSPT F	RO VESSEL FRP 4" SIDE-PORT 300 PSI 5EL 1C7C - 1/2" BSPT F
H412B6	RO VESSEL FRP 4" SIDE-PORT 300 PSI 6EL 1C7C - 1/2" BSPT F	RO VESSEL FRP 4" SIDE-PORT 300 PSI 6EL 1C7C - 1/2" BSPT F
H412D1	RO VESSEL FRP 4" SIDE-PORT 600 PSI 4040 1C7C - 1/2" BSPT M	RO VESSEL FRP 4" SIDE-PORT 600 PSI 4040 1C7C - 1/2" BSPT M
H412D2	RO VESSEL FRP 4" SIDE-PORT 600 PSI 2EL 1C7C - 1/2" BSPT M	RO VESSEL FRP 4" SIDE-PORT 600 PSI 2EL 1C7C - 1/2" BSPT M
H412D3	RO VESSEL FRP 4" SIDE-PORT 600 PSI 3EL 1C7C - 1/2" BSPT M	RO VESSEL FRP 4" SIDE-PORT 600 PSI 3EL 1C7C - 1/2" BSPT M
H412D4	RO VESSEL FRP 4" SIDE-PORT 600 PSI 4EL 1C7C - 1/2" BSPT M	RO VESSEL FRP 4" SIDE-PORT 600 PSI 4EL 1C7C - 1/2" BSPT M
H412D5	RO VESSEL FRP 4" SIDE-PORT 600 PSI 5EL 1C7C - 1/2" BSPT M	RO VESSEL FRP 4" SIDE-PORT 600 PSI 5EL 1C7C - 1/2" BSPT M
H412D6	RO VESSEL FRP 4" SIDE-PORT 600 PSI 6EL 1C7C - 1/2" BSPT M	RO VESSEL FRP 4" SIDE-PORT 600 PSI 6EL 1C7C - 1/2" BSPT M
H412G2	RO VESSEL FRP 4" SIDE-PORT 1000 PSI 2EL 1C7C - 1/2" BSPT M	RO VESSEL FRP 4" SIDE-PORT 1000 PSI 2EL 1C7C - 1/2" BSPT M
H412G3	RO VESSEL FRP 4" SIDE-PORT 1000 PSI 3EL 1C7C - 1/2" BSPT M	RO VESSEL FRP 4" SIDE-PORT 1000 PSI 3EL 1C7C - 1/2" BSPT M
H412G4	RO VESSEL FRP 4" SIDE-PORT 1000 PSI 4EL 1C7C - 1/2" BSPT M	RO VESSEL FRP 4" SIDE-PORT 1000 PSI 4EL 1C7C - 1/2" BSPT M
H412H1	RO VESSEL FRP 4" SIDE-PORT 1200 PSI 4040 1C7C - 1/2" BSPT M	RO VESSEL FRP 4" SIDE-PORT 1200 PSI 4040 1C7C - 1/2" BSPT M
H412H2	RO VESSEL FRP 4" SIDE-PORT 1200 PSI 2EL 1C7C - 1/2" BSPT M	RO VESSEL FRP 4" SIDE-PORT 1200 PSI 2EL 1C7C - 1/2" BSPT M
H412H3	RO VESSEL FRP 4" SIDE-PORT 1200 PSI 3EL 1C7C - 1/2" BSPT M	RO VESSEL FRP 4" SIDE-PORT 1200 PSI 3EL 1C7C - 1/2" BSPT M
H4E2B4	RO VESSEL FRP 4" END-PORT 300 PSI 4EL 1/2" BSPT F - 1/2" BSPT F	RO VESSEL FRP 4" END-PORT 300 PSI 4EL 1/2" BSPT F - 1/2" BSPT F
H4E2B5	RO VESSEL FRP 4" END-PORT 300 PSI 5EL 1/2" BSPT F - 1/2" BSPT F	RO VESSEL FRP 4" END-PORT 300 PSI 5EL 1/2" BSPT F - 1/2" BSPT F
H4E2C4	RO VESSEL FRP 4" END-PORT 450 PSI 4EL 1/2" BSPT F - 1/2" BSPT F	RO VESSEL FRP 4" END-PORT 450 PSI 4EL 1/2" BSPT F - 1/2" BSPT F
H4E2CV	RO VESSEL FRP 4" END-PORT 450 PSI 4021 1/2" BSPT F - 1/2" BSPT F	RO VESSEL FRP 4" END-PORT 450 PSI 4021 1/2" BSPT F - 1/2" BSPT F
H4E3B4	RO VESSEL FRP 4" END-PORT 300 PSI 4EL 3/4" BSPT F - 1/2" BSPT F	RO VESSEL FRP 4" END-PORT 300 PSI 4EL 3/4" BSPT F - 1/2" BSPT F
H4E3C4	RO VESSEL FRP 4" END-PORT 450 PSI 4EL 3/4" BSPT F - 1/2" BSPT F	RO VESSEL FRP 4" END-PORT 450 PSI 4EL 3/4" BSPT F - 1/2" BSPT F
H4E3C5	RO VESSEL FRP 4" END-PORT 450 PSI 5EL 3/4" BSPT F - 1/2" BSPT F	RO VESSEL FRP 4" END-PORT 450 PSI 5EL 3/4" BSPT F - 1/2" BSPT F
H4E3C6	RO VESSEL FRP 4" END-PORT 450 PSI 6EL 3/4" BSPT F - 1/2" BSPT F	RO VESSEL FRP 4" END-PORT 450 PSI 6EL 3/4" BSPT F - 1/2" BSPT F
H4E4D1	RO VESSEL FRP 4" END-PORT 600 PSI 4040 3/4" BSPT M - 1/2" BSPT M	RO VESSEL FRP 4" END-PORT 600 PSI 4040 3/4" BSPT M - 1/2" BSPT M
H4E4D3	RO VESSEL FRP 4" END-PORT 600 PSI 3EL 3/4" BSPT M - 1/2" BSPT M	RO VESSEL FRP 4" END-PORT 600 PSI 3EL 3/4" BSPT M - 1/2" BSPT M
H4E4D4	RO VESSEL FRP 4" END-PORT 600 PSI 4EL 3/4" BSPT M - 1/2" BSPT M	RO VESSEL FRP 4" END-PORT 600 PSI 4EL 3/4" BSPT M - 1/2" BSPT M
H4E4DV	RO VESSEL FRP 4" END-PORT 600 PSI 4021 3/4" BSPT M - 1/2" BSPT M	RO VESSEL FRP 4" END-PORT 600 PSI 4021 3/4" BSPT M - 1/2" BSPT M
H4E4G3	RO VESSEL FRP 4" END-PORT 1000 PSI 3EL 3/4" BSPT M - 1/2" BSPT M	RO VESSEL FRP 4" END-PORT 1000 PSI 3EL 3/4" BSPT M - 1/2" BSPT M
H4E4G4	RO VESSEL FRP 4" END-PORT 1000 PSI 4EL 3/4" BSPT M - 1/2" BSPT M	RO VESSEL FRP 4" END-PORT 1000 PSI 4EL 3/4" BSPT M - 1/2" BSPT M
H4E4G5	RO VESSEL FRP 4" END-PORT 1000 PSI 5EL 3/4" BSPT M - 1/2" BSPT M	RO VESSEL FRP 4" END-PORT 1000 PSI 5EL 3/4" BSPT M - 1/2" BSPT M
H4E4G6	RO VESSEL FRP 4" END-PORT 1000 PSI 6EL 3/4" BSPT M - 1/2" BSPT M	RO VESSEL FRP 4" END-PORT 1000 PSI 6EL 3/4" BSPT M - 1/2" BSPT M
H4E4GV	RO VESSEL FRP 4" END-PORT 1000 PSI 4021 3/4" BSPT M - 1/2" BSPT M	RO VESSEL FRP 4" END-PORT 1000 PSI 4021 3/4" BSPT M - 1/2" BSPT M
H4E4H5	RO VESSEL FRP 4" END-PORT 1200 PSI 5EL 3/4" BSPT M - 1/2" BSPT M	RO VESSEL FRP 4" END-PORT 1200 PSI 5EL 3/4" BSPT M - 1/2" BSPT M
H4R405	4" MPV END PLATE ABS WITH PERMEATE PORT 1/2"BSPT FOR SIDE PORT 300 PSI	4" MPV END PLATE ABS WITH FOR MEATE PORT 1/2"BSPT FOR SIDE PORT 300 PSI
H4R717	4" MPV HEAD ASSEMBLY SIDE PORT 600-1000-1200 PSI	4" MPV HEAD ASSEMBLY SIDE PORT 600-1000-1200 PSI
H815B1	RO VESSEL FRP 8" SIDE-PORT 300 PSI 1EL 1D5D - 1" BSPT F	RO VESSEL FRP 8" SIDE-PORT 300 PSI 1EL 1D5D - 1" BSPT F
H815B2	RO VESSEL FRP 8" SIDE-PORT 300 PSI 2EL 1D5D - 1" BSPT F	RO VESSEL FRP 8" SIDE-PORT 300 PSI 2EL 1D5D - 1" BSPT F
H815B3	RO VESSEL FRP 8" SIDE-PORT 300 PSI 3EL 1D5D - 1" BSPT F	RO VESSEL FRP 8" SIDE-PORT 300 PSI 3EL 1D5D - 1" BSPT F
H815B6	RO VESSEL FRP 8" SIDE-PORT 300 PSI 6EL 1D5D - 1" BSPT F	RO VESSEL FRP 8" SIDE-PORT 300 PSI 6EL 1D5D - 1" BSPT F
H815B7	RO VESSEL FRP 8" SIDE-PORT 300 PSI 7EL 1D5D - 1" BSPT F	RO VESSEL FRP 8" SIDE-PORT 300 PSI 7EL 1D5D - 1" BSPT F
H815C3	RO VESSEL FRP 8" SIDE-PORT 450 PSI 3EL 1D5D - 1" BSPT F	RO VESSEL FRP 8" SIDE-PORT 450 PSI 3EL 1D5D - 1" BSPT F
H815C4	RO VESSEL FRP 8" SIDE-PORT 450 PSI 4EL 1D5D - 1" BSPT F	RO VESSEL FRP 8" SIDE-PORT 450 PSI 4EL 1D5D - 1" BSPT F
H815C5	RO VESSEL FRP 8" SIDE-PORT 450 PSI 5EL 1D5D - 1" BSPT F	RO VESSEL FRP 8" SIDE-PORT 450 PSI 5EL 1D5D - 1" BSPT F
H815C6	RO VESSEL FRP 8" SIDE-PORT 450 PSI 6EL 1D5D - 1" BSPT F	RO VESSEL FRP 8" SIDE-PORT 450 PSI 6EL 1D5D - 1" BSPT F
H815C7	RO VESSEL FRP 8" SIDE-PORT 450 PSI 7EL 1D5D - 1" BSPT F	RO VESSEL FRP 8" SIDE-PORT 450 PSI 7EL 1D5D - 1" BSPT F
H815D2	RO VESSEL FRP 8" SIDE-PORT 600 PSI 2EL 1D5D - 1" BSPT F	RO VESSEL FRP 8" SIDE-PORT 600 PSI 2EL 1D5D - 1" BSPT F

H815D4	RO VESSEL FRP 8" SIDE-PORT 600 PSI 4EL 1D5D - 1" BSPT F	RO VESSEL FRP 8" SIDE-PORT 600 PSI 4EL 1D5D - 1" BSPT F
H815D5	RO VESSEL FRP 8" SIDE-PORT 600 PSI 5EL 1D5D - 1" BSPT F	RO VESSEL FRP 8" SIDE-PORT 600 PSI 5EL 1D5D - 1" BSPT F
H815D6	RO VESSEL FRP 8" SIDE-PORT 600 PSI 6EL 1D5D - 1" BSPT F	RO VESSEL FRP 8" SIDE-PORT 600 PSI 6EL 1D5D - 1" BSPT F
H815D7	RO VESSEL FRP 8" SIDE-PORT 600 PSI 7EL 1D5D - 1" BSPT F	RO VESSEL FRP 8" SIDE-PORT 600 PSI 7EL 1D5D - 1" BSPT F
H815G2	RO VESSEL FRP 8" SIDE-PORT 1000 PSI 2EL 1D5D - 1" BSPT F	RO VESSEL FRP 8" SIDE-PORT 1000 PSI 2EL 1D5D - 1" BSPT F
H815G4	RO VESSEL FRP 8" SIDE-PORT 1000 PSI 4EL 1D5D - 1" BSPT F	RO VESSEL FRP 8" SIDE-PORT 1000 PSI 4EL 1D5D - 1" BSPT F
H815G5	RO VESSEL FRP 8" SIDE-PORT 1000 PSI 5EL 1D5D - 1" BSPT F	RO VESSEL FRP 8" SIDE-PORT 1000 PSI 5EL 1D5D - 1" BSPT F
H815G6	RO VESSEL FRP 8" SIDE-PORT 1000 PSI 6EL 1D5D - 1" BSPT F	RO VESSEL FRP 8" SIDE-PORT 1000 PSI 6EL 1D5D - 1" BSPT F
H815H5	RO VESSEL FRP 8" SIDE-PORT 1200 PSI 5EL 1D5D - 1" BSPT F	RO VESSEL FRP 8" SIDE-PORT 1200 PSI 5EL 1D5D - 1" BSPT F
H815H6	RO VESSEL FRP 8" SIDE-PORT 1200 PSI 6EL 1D5D - 1" BSPT F	RO VESSEL FRP 8" SIDE-PORT 1200 PSI 6EL 1D5D - 1" BSPT F
H817B1	RO VESSEL FRP 8" SIDE-PORT 300 PSI 1EL 1D7D - 1" BSPT F	RO VESSEL FRP 8" SIDE-PORT 300 PSI 1EL 1D7D - 1" BSPT F
H817B2	RO VESSEL FRP 8" SIDE-PORT 300 PSI 2EL 1D7D - 1" BSPT F	RO VESSEL FRP 8" SIDE-PORT 300 PSI 2EL 1D7D - 1" BSPT F
H817B3	RO VESSEL FRP 8" SIDE-PORT 300 PSI 3EL 1D7D - 1" BSPT F	RO VESSEL FRP 8" SIDE-PORT 300 PSI 3EL 1D7D - 1" BSPT F
H817B4	RO VESSEL FRP 8" SIDE-PORT 300 PSI 4EL 1D7D - 1" BSPT F	RO VESSEL FRP 8" SIDE-PORT 300 PSI 4EL 1D7D - 1" BSPT F
H817B5	RO VESSEL FRP 8" SIDE-PORT 300 PSI 5EL 1D7D - 1" BSPT F	RO VESSEL FRP 8" SIDE-PORT 300 PSI 5EL 1D7D - 1" BSPT F
H817B6	RO VESSEL FRP 8" SIDE-PORT 300 PSI 6EL 1D7D - 1" BSPT F	RO VESSEL FRP 8" SIDE-PORT 300 PSI 6EL 1D7D - 1" BSPT F
H817B7	RO VESSEL FRP 8" SIDE-PORT 300 PSI 7EL 1D7D - 1" BSPT F	RO VESSEL FRP 8" SIDE-PORT 300 PSI 7EL 1D7D - 1" BSPT F
H817C2	RO VESSEL FRP 8" SIDE-PORT 450 PSI 2EL 1D7D - 1" BSPT F	RO VESSEL FRP 8" SIDE-PORT 450 PSI 2EL 1D7D - 1" BSPT F
H817C4	RO VESSEL FRP 8" SIDE-PORT 450 PSI 4EL 1D7D - 1" BSPT F	RO VESSEL FRP 8" SIDE-PORT 450 PSI 4EL 1D7D - 1" BSPT F
H817C6	RO VESSEL FRP 8" SIDE-PORT 450 PSI 6EL 1D7D - 1" BSPT F	RO VESSEL FRP 8" SIDE-PORT 450 PSI 6EL 1D7D - 1" BSPT F
H817D1	RO VESSEL FRP 8" SIDE-PORT 600 PSI 1EL 1D7D - 1" BSPT F	RO VESSEL FRP 8" SIDE-PORT 600 PSI 1EL 1D7D - 1" BSPT F
H817D2	RO VESSEL FRP 8" SIDE-PORT 600 PSI 2EL 1D7D - 1" BSPT F	RO VESSEL FRP 8" SIDE-PORT 600 PSI 2EL 1D7D - 1" BSPT F
H817D4	RO VESSEL FRP 8" SIDE-PORT 600 PSI 4EL 1D7D - 1" BSPT F	RO VESSEL FRP 8" SIDE-PORT 600 PSI 4EL 1D7D - 1" BSPT F
H817G2	RO VESSEL FRP 8" SIDE-PORT 1000 PSI 2EL 1D7D - 1" BSPT F	RO VESSEL FRP 8" SIDE-PORT 1000 PSI 2EL 1D7D - 1" BSPT F
H817G3	RO VESSEL FRP 8" SIDE-PORT 1000 PSI 3EL 1D7D - 1" BSPT F	RO VESSEL FRP 8" SIDE-PORT 1000 PSI 3EL 1D7D - 1" BSPT F
H817G4	RO VESSEL FRP 8" SIDE-PORT 1000 PSI 4EL 1D7D - 1" BSPT F	RO VESSEL FRP 8" SIDE-PORT 1000 PSI 4EL 1D7D - 1" BSPT F
H817H6	RO VESSEL FRP 8" SIDE-PORT 1200 PSI 6EL 1D7D - 1" BSPT F	RO VESSEL FRP 8" SIDE-PORT 1200 PSI 6EL 1D7D - 1" BSPT F
H820B4	RO VESSEL FRP 8" SIDE-PORT 300 PSI 4EL 1E5E-1" BSPT F	RO VESSEL FRP 8" SIDE-PORT 300 PSI 4EL 1E5E-1" BSPT F
H820B5	RO VESSEL FRP 8" SIDE-PORT 300 PSI 5EL 1E5E-1" BSPT F	RO VESSEL FRP 8" SIDE-PORT 300 PSI 5EL 1E5E-1" BSPT F
H820B6	RO VESSEL FRP 8" SIDE-PORT 300 PSI 6EL 1E5E-1" BSPT F	RO VESSEL FRP 8" SIDE-PORT 300 PSI 6EL 1E5E-1" BSPT F
H822B1	RO VESSEL FRP 8" SIDE-PORT 300 PSI 1EL 1E7E-1" BSPT F	RO VESSEL FRP 8" SIDE-PORT 300 PSI 1EL 1E7E-1" BSPT F
H822B2	RO VESSEL FRP 8" SIDE-PORT 300 PSI 2EL 1E7E-1" BSPT F	RO VESSEL FRP 8" SIDE-PORT 300 PSI 2EL 1E7E-1" BSPT F
H822B3	RO VESSEL FRP 8" SIDE-PORT 300 PSI 3EL 1E7E-1" BSPT F	RO VESSEL FRP 8" SIDE-PORT 300 PSI 3EL 1E7E-1" BSPT F
H822B4	RO VESSEL FRP 8" SIDE-PORT 300 PSI 4EL 1E7E-1" BSPT F	RO VESSEL FRP 8" SIDE-PORT 300 PSI 4EL 1E7E-1" BSPT F
H822B4B	RO VESSEL FRP 8" SIDE-PORT 300 PSI 4EL 1E7E-1" BSPT F BLU	RO VESSEL FRP 8" SIDE-PORT 300 PSI 4EL 1E7E-1" BSPT F BLU
H822B6	RO VESSEL FRP 8" SIDE-PORT 300 PSI 6EL 1E7E - 1" BSPT F	RO VESSEL FRP 8" SIDE-PORT 300 PSI 6EL 1E7E - 1" BSPT F
H822B6B	RO VESSEL FRP 8" SIDE-PORT 300 PSI 6EL 1E7E-1" BSPT F BLU	RO VESSEL FRP 8" SIDE-PORT 300 PSI 6EL 1E7E-1" BSPT F BLU
H847B6	R.O.VESSEL FRP 8" SIDE-PORT 300 PSI 6EL 1E7G-1" BSPT F	ROVESSEL FRP 8" SIDE-PORT 300 PSI 6EL 1E7G-1" BSPT F
H850B2	RO VESSEL FRP 8" SIDE-PORT 300 PSI 2EL 1D5D3D-1" BSPT F	RO VESSEL FRP 8" SIDE-PORT 300 PSI 2EL 1D5D3D-1" BSPT F
H850B2B	RO VESSEL FRP 8" SIDE-PORT 300 PSI 2EL 1D5D3D-1" BSPT F BLU	RO VESSEL FRP 8" SIDE-PORT 300 PSI 2EL 1D5D3D-1" BSPT F BLU
H851B5	RO VESSEL FRP 8" SIDE-PORT 300 PSI 5EL 1D5D3D7D - 1" BSPT F	RO VESSEL FRP 8" SIDE-PORT 300 PSI 5EL 1D5D3D7D - 1" BSPT F
H851B6	RO VESSEL FRP 8" SIDE-PORT 300 PSI 6EL 1D5D3D7D-1" BSPT F	RO VESSEL FRP 8" SIDE-PORT 300 PSI 6EL 1D5D3D7D-1" BSPT F
H852C6	RO VESSEL FRP 8" SIDE-PORT 450 PSI 6EL 1D5D3D7D2D8D - 1" BSPT F	RO VESSEL FRP 8" SIDE-PORT 450 PSI 6EL 1D5D3D7D2D8D - 1" BSPT F
H860B1	RO VESSEL FRP 8" SIDE-PORT 300 PSI 1EL 1E5E3E-1" BSPT F	RO VESSEL FRP 8" SIDE-PORT 300 PSI 1EL 1E5E3E-1" BSPT F
H860B2	RO VESSEL FRP 8" SIDE-PORT 300 PSI 2EL 1E5E3E-1" BSPT F	RO VESSEL FRP 8" SIDE-PORT 300 PSI 2EL 1E5E3E-1" BSPT F
H860B3	RO VESSEL FRP 8" SIDE-PORT 300 PSI 3EL 1E5E3E-1" BSPT F	RO VESSEL FRP 8" SIDE-PORT 300 PSI 3EL 1E5E3E-1" BSPT F
H860B4	RO VESSEL FRP 8" SIDE-PORT 300 PSI 4EL 1E5E3E-1" BSPT F	RO VESSEL FRP 8" SIDE-PORT 300 PSI 4EL 1E5E3E-1" BSPT F
H860B6B	RO VESSEL FRP 8" SIDE-PORT 300 PSI 6EL 1E5E3E-1" BSPT F BLU	RO VESSEL FRP 8" SIDE-PORT 300 PSI 6EL 1E5E3E-1" BSPT F BLU
H870B5	RO VESSEL FRP 8" SIDE-PORT 300 PSI 5EL 1F 3F 5F - 1" BSPT F	RO VESSEL FRP 8" SIDE-PORT 300 PSI 5 EL 1F 3F 5F - 1" BSPT F
H880B5	RO VESSEL FRP 8" SIDE-PORT 300 PSI 5EL 1G 3G 5G - 1" BSPT F	RO VESSEL FRP 8" SIDE-PORT 300 PSI 5 EL 1G 3G 5G - 1" BSPT F
H880B6	R.O.VESSEL FRP 8" SIDE-PORT 300 PSI 6EL 1G5G3G-1" BSPT F	ROVESSEL FRP 8" SIDE-PORT 300 PSI 6EL 1G5G3G-1" BSPT F
H881B5	RO VESSEL FRP 8" SIDE-PORT 300 PSI 5EL 1G 3G 5G 7G - 1" BSPT F	RO VESSEL FRP 8" SIDE-PORT 300 PSI 5 EL 1G 3G 5G 7G - 1" BSPT F
H881B6	R.O.VESSEL FRP 8" SIDE-PORT 300 PSI 6EL 1G5G3G7G-1" BSPT F	ROVESSEL FRP 8" SIDE-PORT 300 PSI 6EL 1G5G3G7G-1" BSPT F
H890B5	RO VESSEL FRP 8" SIDE-PORT 300 PSI 5EL 1G 3F 5G - 1" BSPT F	RO VESSEL FRP 8" SIDE-PORT 300 PSI 5 EL 1G 3F 5G - 1" BSPT F
H8E5B7	RO VESSEL FRP 8" END-PORT 300 PSI 7EL 1,5" VICT. - 1" BSPT F	RO VESSEL FRP 8" END-PORT 300 PSI 7EL 1,5" VICT. - 1" BSPT F
H8E5C4	RO VESSEL FRP 8" END-PORT 450 PSI 4EL 1,5" VICT. - 1" BSPT F	RO VESSEL FRP 8" END-PORT 450 PSI 4EL 1,5" VICT. - 1" BSPT F
H8E5C5	RO VESSEL FRP 8" END-PORT 450 PSI 5EL 1,5" VICT. - 1" BSPT F	RO VESSEL FRP 8" END-PORT 450 PSI 5EL 1,5" VICT. - 1" BSPT F
H8E5C6	RO VESSEL FRP 8" END-PORT 450 PSI 6EL 1,5" VICT. - 1" BSPT F	RO VESSEL FRP 8" END-PORT 450 PSI 6EL 1,5" VICT. - 1" BSPT F
H8E5C7	RO VESSEL FRP 8" END-PORT 450 PSI 7EL 1,5" VICT. - 1" BSPT F	RO VESSEL FRP 8" END-PORT 450 PSI 7EL 1,5" VICT. - 1" BSPT F
H8E5D3	RO VESSEL FRP 8" END-PORT 600 PSI 3EL 1,5" VICT. - 1" BSPT F	RO VESSEL FRP 8" END-PORT 600 PSI 3EL 1,5" VICT. - 1" BSPT F
H8E5D4	RO VESSEL FRP 8" END-PORT 600 PSI 4EL 1,5" VICT. - 1" BSPT F	RO VESSEL FRP 8" END-PORT 600 PSI 4EL 1,5" VICT. - 1" BSPT F
H8E5D5	RO VESSEL FRP 8" END-PORT 600 PSI 5EL 1,5" VICT. - 1" BSPT F	RO VESSEL FRP 8" END-PORT 600 PSI 5EL 1,5" VICT. - 1" BSPT F
H8E5D6	RO VESSEL FRP 8" END-PORT 600 PSI 6EL 1,5" VICT. - 1" BSPT F	RO VESSEL FRP 8" END-PORT 600 PSI 6EL 1,5" VICT. - 1" BSPT F
H8E5G4	RO VESSEL FRP 8" END-PORT 1000 PSI 4EL 1,5" VICT. - 1" BSPT F	RO VESSEL FRP 8" END-PORT 1000 PSI 4EL 1,5" VICT. - 1" BSPT F
H8E5G5	RO VESSEL FRP 8" END-PORT 1000 PSI 5EL 1,5" VICT. - 1" BSPT F	RO VESSEL FRP 8" END-PORT 1000 PSI 5EL 1,5" VICT. - 1" BSPT F
H8E5G6	RO VESSEL FRP 8" END-PORT 1000 PSI 6EL 1,5" VICT. - 1" BSPT F	RO VESSEL FRP 8" END-PORT 1000 PSI 6EL 1,5" VICT. - 1" BSPT F
H8E5G7	RO VESSEL FRP 8" END-PORT 1000 PSI 7EL 1,5" VICT. - 1" BSPT F	RO VESSEL FRP 8" END-PORT 1000 PSI 7EL 1,5" VICT. - 1" BSPT F
H8E5H1	RO VESSEL FRP 8" END-PORT 1200 PSI 1EL 1,5" VICT. - 1" BSPT F	RO VESSEL FRP 8" END-PORT 1200 PSI 1EL 1,5" VICT. - 1" BSPT F
H8E5H2	RO VESSEL FRP 8" END-PORT 1200 PSI 2EL 1,5" VICT. - 1" BSPT F	RO VESSEL FRP 8" END-PORT 1200 PSI 2EL 1,5" VICT. - 1" BSPT F
H8E5H3	RO VESSEL FRP 8" END-PORT 1200 PSI 3EL 1,5" VICT. - 1" BSPT F	RO VESSEL FRP 8" END-PORT 1200 PSI 3EL 1,5" VICT. - 1" BSPT F
H8E5H5	RO VESSEL FRP 8" END-PORT 1200 PSI 5EL 1,5" VICT. - 1" BSPT F	RO VESSEL FRP 8" END-PORT 1200 PSI 5EL 1,5" VICT. - 1" BSPT F
H8E5H6	RO VESSEL FRP 8" END-PORT 1200 PSI 6EL 1,5" VICT. - 1" BSPT F	RO VESSEL FRP 8" END-PORT 1200 PSI 6EL 1,5" VICT. - 1" BSPT F
H8E5H7	RO VESSEL FRP 8" END-PORT 1200 PSI 7EL 1,5" VICT. - 1" BSPT F	RO VESSEL FRP 8" END-PORT 1200 PSI 7EL 1,5" VICT. - 1" BSPT F
H8R045	8" MPV LOCKING KIT (N.3 SEGMENTS) IN AISI 304 FOR 600-1000-1200 PSI	8" MPV LOCKING KIT (N.3 SEGMENTS) IN AISI 304 FOR 600-1000-1200 PSI
H8R063	8" MPV THRUST CONE IN ABS FOR END PORT 600-1000-1200 PSI	8" MPV THRUST CONE IN ABS FOR END PORT 600-1000-1200 PSI
H8R073	8" MPV THRUST CONE IN ABS FOR SIDE PORT 600-1000-1200 PSI	8" MPV THRUST CONE IN ABS FOR SIDE PORT 600-1000-1200 PSI
H8R101	8" MPV O-RING IN EPDM OF FEED CONC.PORT 1,5" 300-450 PSI	8" MPV O-RING IN EPDM OF FEED CONC.PORT 1,5" 300-450 PSI
H8R401	8" MPV SEALING PLATE (PERMEATE PORT) IN ABS FOR SIDE PORT 300 PSI	8" MPV SEALING PLATE (FOR MEATE PORT) IN ABS FOR SIDE PORT 300 PSI
H8R503	8" MPV RETAINING RING 2" IN AISI 304	8" MPV RETAINING RING 2" IN AISI 304
H8R709	8" MPV HEAD ASSEMBLY END PORT 1200 PSI	8" MPV HEAD ASSEMBLY END PORT 1200 PSI
H8R711	8" MPV HEAD ASSEMBLY SIDE PORT 300 PSI	8" MPV HEAD ASSEMBLY SIDE PORT 300 PSI
H8R713	8" MPV HEAD ASSEMBLY SIDE PORT 450 PSI	8" MPV HEAD ASSEMBLY SIDE PORT 450 PSI
H8R715	8" MPV HEAD ASSEMBLY SIDE PORT 600 PSI	8" MPV HEAD ASSEMBLY SIDE PORT 600 PSI
H8R717	8" MPV HEAD ASSEMBLY SIDE PORT 1000 PSI	8" MPV HEAD ASSEMBLY SIDE PORT 1000 PSI
H8R719	8" MPV HEAD ASSEMBLY SIDE PORT 1200 PSI	8" MPV HEAD ASSEMBLY SIDE PORT 1200 PSI
HA051	LAMPADA UV 12 WATT	UV LAMP 12 WATT
HA052	LAMPADA UV 16 WATT	UV LAMP 16 WATT
HA053	LAMPADA UV 30 WATT	UV LAMP 30 WATT
HA054	LAMPADA UV 40 WATT	UV LAMP 40 WATT
HA056	LAMPADA UV 80 WATT	UV LAMP 80 WATT
HA056B	LAMPADA UV 200 WATT	UV LAMP 200 WATT
HA056C	LAMPADA UV 400 WATT	UV LAMP 400 WATT
HA060	QUARZO PER LAMPADA UV 10 WATT	QUARZ FOR UV LAMP 10 WATT
HA061	QUARZO PER LAMPADA UV 12 WATT	QUARZ FOR UV LAMP 12 WATT
HA062	QUARZO PER LAMPADA UV 16 WATT	QUARZ FOR UV LAMP 16 WATT
HA063	QUARZO PER LAMPADA UV 30 WATT	QUARZ FOR UV LAMP 30 WATT
HA064	QUARZO PER LAMPADA UV 40 W E 80 W	QUARZ FOR UV LAMP 40 W E 80 W
HA064B	QUARZO PER LAMPADA UV 200 WATT	QUARZ FOR UV LAMP 200 WATT
HA064C	QUARZO PER LAMPADA UV 400 WATT	QUARZ FOR UV LAMP 400 WATT

HA070	ALIMENTATORE DEBATTERIZZATORE UV 12 - UV 16	UV 12 - UV 16 STERILIZER TRANSFORMER
HA073	SCHEDA ACCENSIONE PER UV 30 - 40 - 240 - 340	POWER ELECTRICAL BOARD FOR UV 30 - 40 - 240 - 340
HA073A	SCHEDA ACCENSIONE PER UV 440 - 540	POWER ELECTRICAL BOARD FOR UV 440-540
HA074	O-RING PER QUARZO PER LAMPADA UV 40-80 WATT	O-RING FOR QUARTZ FOR UV LAMP 40-80 WATT
HA074C	O-RING PER QUARZO PER LAMPADA UV 400 WATT	O-RING FOR QUARTZ FOR UV LAMP 400 WATT
HA075	BLOCCA GUAINA IN PLASTICA	PLASTIC FIXING SHEATH FITTING
HA087	CONNETTORE QUADRIPIN	QUADRIPIN CONNECTOR
HA091	SENSORE 1/4" RACK TEFLON PER UV IN HDPE	SENSOR 1/4" RACK TEFLON FOR UV IN HDPE
HA093	CAVO PLUS DA 4 M	CABLE PLUS 4 M
HA106N	QUADRO ELETTRICO COMPLETO HDPE15 LCD PLUS	COMPLETE CONTROL BOX HDPE15 LCD PLUS
HA350A	DEBATTERIZZATORE FC-8 220V-50HZ 29W - 3/4" BSP M 316L	UV STERILIZER FC-8 220V-50HZ 29W-3/4" BSP M 316L
HA355A	DEBATTERIZZATORE FC-12 220V-50HZ 40W - 1" BSP M 316L	UV STERILIZER FC-12 220V-50HZ 40W - 1" BSP M 316L
HA360A	DEBATTERIZZATORE FC-15 220V-50HZ 65W - 1" BSP M 316L	UV STERILIZER FC-15 220V-50HZ 65W - 1" BSP M 316L
HA365A	DEBATTERIZZATORE FC-20 220V-50HZ 65W - 1 1/2" BSP M 316L	UV STERILIZER FC-20 220V-50HZ 65W-1 1/2" BSP M 316L
HA370A	DEBATTERIZZATORE FC-24 220V-50HZ 85W - 1 1/2" BSPM 316L	UV STERILIZER FC-24 220V-50HZ 85W - 1 1/2" BSPM 316L
HA375A	DEBATTERIZZATORE FC-35 220V-50HZ 100W - 2"BSP M 316L	UV STERILIZER FC-35 220V-50HZ 100W - 2"BSP M 316L
HA380A	DEBATTERIZZATORE FC-45 220V-50HZ 120W - 2" BSP M AISI 316L	UV STERILIZER FC-45 220V-50HZ 120W-2" BSP M AISI 316L
HA400A	DEBATTERIZZATORE FC-70D 220V-50HZ 2x100W - DN50 316L	UV STERILIZER FC-70D 220V-50HZ 2x100W - DN50 316L
HA410A	DEBATTERIZZATORE FC-120D 220V-50HZ 3x120W - DN65 316L	UV STERILIZER FC-120D 220V-50HZ 3x120W - DN65 316L
HA420A	DEBATTERIZZATORE FC-180D 220V-50HZ 5x120W - DN80 316L	UV STERILIZER FC-180D 220V-50HZ 5x120W-DN80 316L
HA430A	DEBATTERIZZATORE FC-250D 220V-50HZ 7x120W - DN100 316L	UV STERILIZER FC-250D 220V-50HZ 7x120W - DN100 316L
HA553	CLIP D.50 MM PER HA300	CLIP D.50 MM FOR HA300
HA554	TAPPO SPIA IN PC TRASPARENTE	PC SIGHT CAP
HA555	TAPPO CIECO IN AISI 304	AISI 304 CAP
HA557	RACCORDO BLOCCA QUARZO D. 24,5 MM IN AISI 304	FIXING SHEATH FITTING D.24,5 MM AISI 304
HA577	QUADRO ELETTRICO COMPLETO FC-120D	COMPLETE CONTROL BOX FC-120D
HA588	CAVO QUADRIPIN PER LAMPADA UV SERIE FC E FC-D	QUADRIPIN CABLE FOR UV LAMP FC AND FC-D SERIES
HA800	DEBATTERIZZATORE UV IN HDPE 3 M3/H CON SENSORE	UV STERILIZER IN HDPE 3 M3/H WITH DOSING SENSOR
HA800N	DEBATTERIZZATORE UV IN HDPE 3 M3/H	UV STERILIZER UV IN HDPE 3 M3/H
HA802	DEBATTERIZZATORE UV IN HDPE 5 M3/H CON SENSORE	UV STERILIZER IN HDPE 5 M3/H WITH SENSOR
HA802N	DEBATTERIZZATORE UV IN HDPE 5 M3/H	UV STERILIZER IN HDPE 5 M3/H
HA804	DEBATTERIZZATORE UV IN HDPE 8 M3/H CON SENSORE	UV STERILIZER IN HDPE 8 M3/H WITH SENSOR
HA804N	DEBATTERIZZATORE UV IN HDPE 8 M3/H	UV STERILIZER IN HDPE 8 M3/H
HA806	DEBATTERIZZATORE UV IN HDPE 15 M3/H CON SENSORE	UV STERILIZER IN HDPE 15 M3/H WITH SENSOR
HA806N	DEBATTERIZZATORE UV IN HDPE 15 M3/H	UV STERILIZER IN HDPE 15 M3/H
HA808	DEBATTERIZZATORE UV IN HDPE 22 M3/H CON SENSORE	UV STERILIZER IN HDPE 22 M3/H WITH SENSOR
HA810	DEBATTERIZZATORE UV IN HDPE 35 M3/H CON SENSORE	UV STERILIZER IN HDPE 35 M3/H WITH SENSOR
HA812	DEBATTERIZZATORE UV IN HDPE 45 M3/H CON SENSORE	UV STERILIZER IN HDPE 45 M3/H WITH SENSOR
HA814	DEBATTERIZZATORE UV IN HDPE 61 M3/H CON SENSORE	UV STERILIZER IN HDPE 61 M3/H WITH SENSOR
HA816	DEBATTERIZZATORE UV IN HDPE 90 M3/H CON SENSORE	UV STERILIZER IN HDPE 90 M3/H WITH SENSOR
HA818	DEBATTERIZZATORE UV IN HDPE 110 M3/H CON SENSORE	UV STERILIZER IN HDPE 110 M3/H WITH SENSOR
HA820	DEBATTERIZZATORE UV IN HDPE 150 M3/H CON SENSORE	UV STERILIZER IN HDPE 150 M3/H WITH SENSOR
HA822	DEBATTERIZZATORE UV IN HDPE 250 M3/H CON SENSORE	UV STERILIZER IN HDPE 250 M3/H WITH SENSOR
HA824	DEBATTERIZZATORE UV IN HDPE 340 M3/H CON SENSORE	UV STERILIZER IN HDPE 340 M3/H WITH SENSOR
HA826	DEBATTERIZZATORE UV IN HDPE 470 M3/H CON SENSORE	UV STERILIZER IN HDPE 470 M3/H WITH SENSOR
HA828	DEBATTERIZZATORE UV IN HDPE 600 M3/H CON SENSORE	UV STERILIZER IN HDPE 600 M3/H WITH SENSOR
HA830	DEBATTERIZZATORE UV IN HDPE 830 M3/H CON SENSORE	UV STERILIZER IN HDPE 830 M3/H WITH SENSOR
HA832	DEBATTERIZZATORE UV IN HDPE 980 M3/H CON SENSORE	UV STERILIZER IN HDPE 980 M3/H WITH SENSOR
HA840	DEBATTERIZZATORE UV2 IN AISI 316L 24 M3/H CON SENSORE	UV2 STERILIZER IN AISI 316L 24 M3/H WITH DOSING SENSOR
HA840A	DEBATTERIZZATORE UV2 IN AISI 316L 24 M3/H PULIZIA AUT. CON SENSORE	UV2 STERILIZER IN AISI 316L 24 M3/H SELF CLEANING WITH DOSING SENSOR
HA840M	DEBATTERIZZATORE UV2 IN AISI 316L 24 M3/H PULIZIA MAN. CON SENSORE	UV2 STERILIZER IN AISI 316L 24 M3/H MAN. CLEANING WITH DOSING SENSOR
HA842	DEBATTERIZZATORE UV2 IN AISI 316L 60 M3/H CON SENSORE	UV2 STERILIZER IN AISI 316L 60 M3/H WITH DOSING SENSOR
HA842A	DEBATTERIZZATORE UV2 IN AISI 316L 60 M3/H PULIZIA AUT. CON SENSORE	UV2 STERILIZER IN AISI 316L 60 M3/H SELF CLEANING WITH DOSING SENSOR
HA842M	DEBATTERIZZATORE UV2 IN AISI 316L 60 M3/H PULIZIA MAN. CON SENSORE	UV2 STERILIZER IN AISI 316L 60 M3/H MAN. CLEANING WITH DOSING SENSOR
HA844	DEBATTERIZZATORE UV2 IN AISI 316L 96 M3/H CON SENSORE	UV2 STERILIZER IN AISI 316L 96 M3/H WITH DOSING SENSOR
HA844A	DEBATTERIZZATORE UV2 IN AISI 316L 96 M3/H PULIZIA AUT. CON SENSORE	UV2 STERILIZER IN AISI 316L 96 M3/H SELF CLEANING WITH DOSING SENSOR
HA846	DEBATTERIZZATORE UV2 IN AISI 316L 125 M3/H CON SENSORE	UV2 STERILIZER IN AISI 316L 125 M3/H WITH DOSING SENSOR
HA848	DEBATTERIZZATORE UV2 IN AISI 316L 160 M3/H CON SENSORE	UV2 STERILIZER IN AISI 316L 160 M3/H WITH DOSING SENSOR
HA848A	DEBATTERIZZATORE UV2 IN AISI 316L 160 M3/H PULIZIA AUT. CON SENSORE	UV2 STERILIZER IN AISI 316L 160 M3/H SELF CLEANING WITH DOSING SENSOR
HA860A	DEBATTERIZZATORE UV4 IN AISI 316L 150 M3/H PULIZIA AUT. CON SENSORE	UV4 STERILIZER IN AISI 316L 150 M3/H SELF CLEANING WITH DOSING SENSOR
HA862A	DEBATTERIZZATORE UV4 IN AISI 316L 250 M3/H PULIZIA AUT. CON SENSORE	UV4 STERILIZER IN AISI 316L 250 M3/H SELF CLEANING WITH DOSING SENSOR
HA864A	DEBATTERIZZATORE UV4 IN AISI 316L 300 M3/H PULIZIA AUT. CON SENSORE	UV4 STERILIZER IN AISI 316L 300 M3/H SELF CLEANING WITH DOSING SENSOR
HA866A	DEBATTERIZZATORE UV4 IN AISI 316L 420 M3/H PULIZIA AUT. CON SENSORE	UV4 STERILIZER IN AISI 316L 420 M3/H SELF CLEANING WITH DOSING SENSOR
HA868A	DEBATTERIZZATORE UV4 IN AISI 316L 600 M3/H PULIZIA AUT. CON SENSORE	UV4 STERILIZER IN AISI 316L 600 M3/H SELF CLEANING WITH DOSING SENSOR
HA870A	DEBATTERIZZATORE UV4 IN AISI 316L 830 M3/H PULIZIA AUT. CON SENSORE	UV4 STERILIZER IN AISI 316L 830 M3/H SELF CLEANING WITH DOSING SENSOR
HA872A	DEBATTERIZZATORE UV4 IN AISI 316L 980 M3/H PULIZIA AUT. CON SENSORE	UV4 STERILIZER IN AISI 316L 980 M3/H SELF CLEANING WITH DOSING SENSOR
MCNE4040-40	MEMBRANA CSM 4" NE4040-40	CSM 4" MEMBRANE NE4040-40
MCNE4040-70	MEMBRANA CSM 4" NE4040-70	CSM 4" MEMBRANE NE4040-70
MCNE8040-40	MEMBRANA CSM 8" NE8040-40	CSM 8" MEMBRANE NE8040-40
MCNE8040-70	MEMBRANA CSM 8" NE8040-70	CSM 8" MEMBRANE NE8040-70
MCRE2540-SHN	MEMBRANA CSM2.5" RE2540-SHN	CSM 2.5" MEMBRANE RE2540-SHN
MCRE4021-SHN	MEMBRANA CSM 4" RE4021-SHN	CSM 4" MEMBRANE RE4021-SHN
MCRE4040-CE	MEMBRANA CSM 4" RE4040-CE	CSM 4"MEMBRANE RE4040-CE
MCRE8040-BR400	MEMBRANA CSM 8" RE8040-BR400	CSM 8" MEMBRANE RE8040-BR400
MCRE8040-FEN440	MEMBRANA CSM 8" RE8040-FEN440	CSM 8" MEMBRANE RE8040-FEN440
MCRE8040-FL	MEMBRANA CSM 8" RE8040-FL	CSM 8" MEMBRANE RE8040-FL
MMBW4040FR	MEMBRANA MWG 4" BW-4040FR	MWG 4" MEMBRANE BW-4040FR
MMSW8040MR	MEMBRANA MWG 8" SW-8040MR	MWG 8" MEMBRANE SW-8040MR
MVFR11-4040	MEMBRANA VONTRON 4" FR11-4040	VONTRON 4" MEMBRANE FR11-4040
MVFR11-8040	MEMBRANA VONTRON 8" FR11-8040	VONTRON 8" MEMBRANE FR11-8040
MVFR12-8040	MEMBRANA VONTRON 8" FR12-8040	VONTRON 8" MEMBRANE FR12-8040
MVSW8040HR-400	MEMBRANA VONTRON 8" SW8040HR-400	VONTRON 8" MEMBRANE SW8040HR-400
MVSW8040LE-400	MEMBRANA VONTRON 8" SW8040LE-400	VONTRON 8" MEMBRANE SW8040LE-400
MVVNF1-1812	MEMBRANA VONTRON 1.8" VNF1-1812	VONTRON 1.8" MEMBRANE VNF1-1812
MVVNF1-2012	MEMBRANA VONTRON 2" VNF1-2012	VONTRON 2" MEMBRANE VNF1-2012
MVVNF1-2540	MEMBRANA VONTRON 2.5" VNF1-2540	VONTRON 2.5" MEMBRANE VNF1-2540
MVVNF1-4040	MEMBRANA VONTRON 4" VNF1-4040	VONTRON 4" MEMBRANE VNF1-4040
MVVNF1-8040	MEMBRANA VONTRON 8" VNF1-8040	VONTRON 8" MEMBRANE VNF1-8040
MVVNF2812	MEMBRANA VONTRON 2.8" VNF-2812	VONTRON 2.8" MEMBRANE VNF-2812
MVXLP12-8040	MEMBRANA VONTRON 8" XLP12-8040	VONTRON 8" MEMBRANE XLP12-8040
PA059	INSERTO CRYSTAL TRASPARENTE	TRANSPARENT CRYSTAL INSERT
PA515	INSERTO COPERCHIO OCEAN TRASPARENTE	TRANSPARENT OCEAN INSERT
PA516	INSERTO COPERCHIO LOGIX AZZURRO	LIGHT BLUE INSERT LOGIX COVER
PA580	SPORTELLO SALE COPERCHIO LOGIX-OCEAN NERO	SALT LID FOR BLACK LOGIX-OCEAN COVER
PA581	SPORTELLO SALE COPERCHIO LOGIX-OCEAN BIANCO	SALT LID FOR WHITE LOGIX-OCEAN COVER
PB326	CORPO CAB. SURF 17" GRIGIO	BODY CAB. SURF 17" GREY
PB336	CORPO CAB. SURF 35" GRIGIO	BODY CAB. SURF 35" GREY
PV324	LATERALE FILETTATO PER RAGGIERA 14"-16" MONTAGGIO SUPERIORE	THREADED LATERAL FOR DIFFUSER 14"-16" TOP MOUNT
PV324B	LATERALE A BAIONETTA PER RAGGIERA 14"-16" TOP MOUNT	TWIST LOCK LATERAL DIFFUSER 14"-16" TOP MOUNT

PV325	LATERALE FILETTATO PER RAGGIERA 18"-21"-24" MONTAGGIO SUPERIORE	THREADED LATERAL FOR DIFFUSER 18"-21"-24" TOP MOUNT
PV325B	LATERALE A BAIONETTA PER RAGGIERA 18"-21"-24" TOP MOUNT	TWIST LOCK LATERAL DIFFUSER 18"-21"-24" TOP MOUNT
PV326	LATERALE FILETTATO PER RAGGIERA 30" MONTAGGIO SUPERIORE	THREADED LATERAL FOR DIFFUSER 30" TOP MOUNT
PV326B	LATERALE A BAIONETTA PER RAGGIERA 30" TOP MOUNT	TWIST LOCK LATERAL DIFFUSER 30" TOP MOUNT
PV327	LATERALE FILETTATO PER RAGGIERA 36" MONTAGGIO SUPERIORE	THREADED LATERAL FOR DIFFUSER 36" TOP MOUNT
PV327B	LATERALE A BAIONETTA PER RAGGIERA 36" TOP MOUNT	TWIST LOCK LATERAL DIFFUSER 36" TOP MOUNT
PV406	ADATTATORE 2 1/2 - IN/OUT 3/4" F TAPPO 1/2" LATERALE	ADAPTER 2 1/2 - IN/OUT 3/4" F 1/2" LATERAL PLUG
PV422A	RESILITE 200K OHM 1/2" NPT 110V 60HZ	RESILITE 200K OHM 1/2" NPT 110V 60HZ
PV509	RIDUZIONE FLANGIATA 6" - 3" - 3" BSPP COMPLETA DI O-RING E VITERIA	FLANGED ADAPTER 6" - 3" - 3" BSPP W/ O-RING AND SCREWS
RA061A	ANTRACITE GRANULOMETRIA 2-3 BIG BAG DA 1000 KG.	ANTHRACITE 2 - 3 BIG BAG 1000 KG
RA068C	FILTER MEDIA GFH (GRANULAR FERRIC HYDROXIDE) BIG BAG DA 800 KG	GRANULAR FERRIC HYDROXIDE BIG BAG 800 KG
RA069A	PIROLUSITE (BIOSSIDO DI MN) BIG BAG DA 1000 kg	PYROLUSITE (MANGANESE DIOXIDE) BIG BAG 1000LT
RA206A	BIG BAG 550 KG CARB. GAC 8X30 VEGETALE	BIG BAG 550 KG CARB. GAC 8X30 VEGETAL
RA210	SACCO 25 KG. CARB.GAC DCN 1000 6x12 VEGETALE (46 lt.ca)	BAG 25 KG. CARB.GAC DCN 1000 6x12 VEGETAL (46 lt.ABOUT)
RA212	SACCO 25 KG CARB. MIN. NORIT GAC 830 W	BAG 25 KG CARB. MIN. NORIT GAC 830 W
RA212A	BIG BAG 500 KG CARB.MIN. NORIT GAC 830 W	BIG BAG 500 KG CARB. MIN NORIT GAC 830 W
RA214A	BIG BAG 500 KG CARB.MIN. NORIT GAC 1240 W	BIG BAG 500 KG CARB. MIN. NORIT GAC 1240 W
RA218	SACCO 25 KG CARBONE VEGETALE NORIT 1240 GCN	VEGETAL CARBON GCN 1240 NORIT BAG 25 KG
RA300A	CATIONICA FORTE GEL PURE RESIN PC002 (Na) BIG BAG 1250 LT	STRONG CATION GEL PURE RESIN PC002 (Na) BIG BAG 1250 LT
RA304	CATIONICA FORTE GEL PURE RESIN PC002ID (Na)	STRONG CATION GEL PURE RESIN PC002ID (Na)
RA314	CATIONICA FORTE GEL PURE RESIN PC003UN-Na (Conf Big Bags 1200 LT)	STRONG CATION GEL PURE RESIN PC003UN-Na (Big Bags 1200 LT)
RF06301	INIETTORE MARRONE E DLFC#1 PER VALV.RUNXIN - 6301	INJECTOR BROWN + DLFC #1 FOR RUNXIN VALVES -6301
RF06302	INIETTORE ROSA E DLFC #1 PER VALV. RUNXIN - 6302	INJECTOR PINK + DLFC #1 FOR RUNXIN VALVES - 6302
RF06303	INIETTORE GIALLO E DLFC #2 PER VALV.RUNXIN - 6303	INJECTOR YELLOW+DLFC #2 FOR RUNXIN VALVES - 6303
RF06304	INIETTORE BLU E DLFC #2 PER VALV.RUNXIN - 6304	INJECTOR BLUE + DLFC #2 FOR RUNXIN VALVES - 6304
RF06305	INIETTORE BIANCO E DLFC #3 PER VALV. RUNXIN - 6305	INJECTOR WHITE + DLFC #3 FOR RUNXIN VALVES - 6305
RF06306	INIETTORE NERO E DLFC #3 PER VALV.RUNXIN - 6306	INJECTOR BLACK +DLFC #3 FOR RUNXIN VALVES - 6306
RF06307	INIETTORE VIOLA E DLFC #4 PER VALV.RUNXIN - 6307	INJECTOR PURPLE +DLFC #4 FOR RUNXIN VALVES - 6307
RF06308	INIETTORE ROSSO E DLFC #4 PER VALV.RUNXIN - 6308	INJECTOR RED + DLFC #4FOR RUNXIN VALVES - 6308
RF06309	INIETTORE VERDE E DLFC #5 PER VALV.RUNXIN - 6309	INJECTOR GREEN + DLFC #5 FOR RUNXIN VALVES - 6309
RF06310	INIETTORE ARANCIONE E DLFC #5 PER VALV.RUNXIN - 6310	INJECTOR ORANGE + DLFC #5 FOR RUNXIN VALVES - 6310
RF09902	DISPLAY F69P - 6381027	F69P DISPLAY BOARD - 6381027
RF09905	FRONTALINO F69P - 8300039	F69P FRONTAL PANEL - 8300039
RF09909	VALVOLA A SFERA ELETTRONICA PER VALVOLE F99	ELECTRONIC BALL VALVE FOR F99 VALVES
RF09961	CAVO CONNESSIONE ELETTRODO PRODUTTORE CLORO	CONNECTION CABLE FOR DISINFECTION DEVICE
RF09977	ADATTATORE USA PER TRASFORMATORE SPINA EUROPEA	USA CONNECTOR FOR EUROPEAN POWER ADAPTER
RF111A3	VALV. AUT. ADDOLC. F111A3 (63620) VOL. 2" DF	VALV. AUT. SOFT. F111A3 (63620) VOL. 2" DF
RF43024	POZZETTO DIAM. 90 MM H. 428 MM C/VALVOLA GALLEGGIANTE	BRINE WELL DIAM. 90 MM H 428 MM W/FLOATING VALVE
RF43028	POZZETTO DIAM. 90 MM H. 913 MM C/VALVOLA GALLEGGIANTE	BRINE WELL DIAM. 90 MM H 913 MM W/FLOATING VALVE
RF56A2	VALV. MANUALE FILTRO F56A (51204) 1"F - MANIGLIA IN PLASTICA	VALV. MANUAL FILTER (51204) 1"F - PLASTIC HANDLE
RF56AC	VALV. MANUALE FILTRO F56AC (51204C) 1"F	VALV. MANUAL FILTER F56AC (51204C) 1"F
RF56E1-1	VALV. MANUALE FILTRO F56E (51102) 1/2"F - MANIGLIA IN METALLO	VALV. MANUAL FILTER F56E (51102) 1/2"F - METAL HANDLE
RF56E1-2	VALV. MANUALE FILTRO F56E (51102) 3/4"F - MANIGLIA IN METALLO	VALV. MANUAL FILTER F56E (51102) 3/4"F - METAL HANDLE
RF56E2-1	VALV. MANUALE FILTRO F56E (51202) 1/2"F - MANIGLIA IN PLASTICA	VALV. MANUAL FILTER F56E (51202) 1/2"F - PLASTIC HANDLE
RF56E2-2	VALV. MANUALE FILTRO F56E (51202) 3/4" - MANIGLIA IN PLASTICA	VALV. MANUAL FILTER F56E (51202) 3/4"F - PLASTIC HANDLE
RF56EC-1	VALV. MANUALE FILTRO F56EC (51202C) 1/2"F - MANIGLIA IN PLASTICA	VALV. MANUAL FILTER F56EC (51202C) 1/2" - PLASTIC HANDLE
RF56EC-2	VALV. MANUALE FILTRO F56EC (51202C) 3/4"F - MANIGLIA IN PLASTICA	VALV. MANUAL FILTER F56EC (51202C) 3/4"F - PLASTIC HANDLE
RF63B1	VALV. AUT. ADDOLC. F63B1 (63504S) CRON. 1" DF	VALV. AUT. SOFT. F63B1 (63504S) CHRON. 1" DF
RF63D1	VALV. AUT. ADDOLC. F63D1 (62504) CRON. 1" DF	VALV. AUT. SOFT. F63D1 (62504) CHRON. 1" DF
RF63P1Y	VALV. AUT. ADDOLC. F63P1Y (63504PY) CRON. 1" DF	VALV. AUT. SOFT. F63P1Y (63504PY) CHRON. 1" DF
RF64A1	VALV. MANUALE ADDOLC. F64A (61104) 1" DF - MANIGLIA IN METALLO	VALV. MANUAL SOFT. F64A (61104) 1"DF - METAL HANDLE
RF64A2	VALV. MANUALE ADDOLC. F64A (61204) 1" DF - MANIGLIA IN PLASTICA	VALV. MANUAL SOFT. F64A (61204) 1"DF - PLASTIC HANDLE
RF64AC	VALV. MANUALE ADDOLC. F64AC (61204C) 1" DF - MANIGLIA LATERALE	VALV. MANUAL SOFT. F64AC (61204C) 1"DF - SIDE CONTROL
RF64C	VALV. MANUALE ADDOLC. F64C (71202) 3/4" UF	VALV. MANUAL SOFT. F64C (71202) 3/4" UF
RF65D1	VALV. AUT. ADDOLC. F65D1 (62502) CRON. 3/4" DF	VALV. AUT. SOFT. F65D1 (62502) CHRON. 3/4" DF
RF65D3	VALV. AUT. ADDOLC. F65D3 (62602) VOL. 3/4" DF	VALV. AUT. SOFT. F65D3 (62602) VOL. 3/4" DF
RF67C1	VALV. AUT. FILTRO F67C1 (53504) 1"	VALV. AUT. FILTER F67C1 (53504) 1"
RF70DL	BYPASS CON TURBINA PER VALVOLA F79 - 41202L	BYPASS WITH TURBINE FOR F79 VALVE - 41202L
RF77BS	VALV. MANUALE FILTRO F77BS (51215) 2"M	VALV. MANUAL FILTER F77BS (51215) 2"M
RF99A1	VALV. AUT. ADDOLC. F99A1 (63515) CRON. 2" DF	VALV. AUT. SOFT. F99A1 (63515) CHRON. 2" DF
T0190CACA	TINO LT 190 AZZURRO COP. AZZURRO*	BRINE TANK LT 190 LIGHT BLUE BODY - LIGHT BLUE COVER*
T0340CACA	TINO LT 340 AZZURRO COP. AZZURRO*	BRINE TANK LT 340 LIGHT BLUE BODY - LIGHT BLUE COVER*
T0460CACA	TINO LT 460 AZZURRO COP. AZZURRO*	BRINE TANK LT 460 LIGHT BLUE BODY - LIGHT BLUE COVER*
T0670CACA	TINO LT 670 AZZURRO COP. AZZURRO*	BRINE TANK LT 670 LIGHT BLUE BODY - LIGHT BLUE COVER*
T0920CACA	TINO LT 920 AZZURRO COP. AZZURRO*	BRINE TANK LT 920 LIGHT BLUE BODY - LIGHT BLUE COVER*
T0920CAXX	CORPO TINO LT 920 AZZURRO	BRINE TANK LT 920 LIGHT BLUE BODY - NO COVER
V-D1196-09	950 BOTTOM STACK DISTRIBUTOR 50 MM SOLVENT	950 BOTTOM STACK DISTRIBUTOR 50 MM SOLVENT
V-D1198-09	990 BOTTOM STACK DISTRIBUTOR 50 MM SOLVENT	990 BOTTOM STACK DISTRIBUTOR 50 MM SOLVENT

INDEX

- Valves, controllers and accessories
- Pressure vessels and accessories
- Cabinets
- Brine tanks
- Reverse osmosis membranes
- Vessels and accessories, rotary pumps
- UV sterilizers
- Filter housings, cartridges and polyphosphate feeders
- Ion exchange resins, filtering media
- Residential R.O. components
- Water softeners

EUROTROL®
WATER TREATMENT COMPONENTS

Valves, controllers and accessories
AUTOTROL, CLACK, FLECK, RUNXIN

Back to index

Autotrol Residential Valves Series 368

- For automatic and residential water softening systems;
- Valve body in NSF listed Noryl plastic material;
- Valve rubber compounded for cold water, NSF listed material;
- Operating flow rate Kv = 3,68;
- Backwash flow rate = 10 lpm @ Δp 1,72 bar;
- Resin volume range = 5 ÷ 25 litres;
- Available with the following controllers:
- 604 electronic chronometric; 606 electronic volumetric;
- With European transformer 12/230V – 50Hz;
- Accessories (e.g. upper screen, etc.) not included;
- Programmable chronometric regeneration (calendar override) and consumption statistical data memory.

Ref	Description	Fam.	Subfam.		
AB300	VAL.368/604 3/4″ M REFILL.14 INJ E DLFC 0.9 GPM 12/230V 50HZ EURO PLUG	10	26		
AB301	VAL.368/604 3/4″ M REFILL.14 INJ F DLFC 1.20 GPM12/230V 50HZ EURO PLUG	10	26		
AB302	VAL.368/604 3/4″ M REFILL.14 INJ G DLFC 1.60 GPM12/230V 50HZ EURO PLUG	10	26		
AB303	VAL.368/604 3/4″ M REFILL.14 INJ H DLFC 2.00 GPM12/230V 50HZ EURO PLUG	10	26		
AB400	VAL.368/606 3/4″ M REFILL.14 INJ E DLFC 0.9 GPM 12/230V 50HZ EURO PLUG	10	27		
AB401	VAL.368/606 3/4″ M REFILL.14 INJ F DLFC 1.20 GPM12/230V 50HZ EURO PLUG	10	27		
AB402	VAL.368/606 3/4″ M REFILL.14 INJ G DLFC 1.60 GPM12/230V 50HZ EURO PLUG	10	27		
AB403	VAL.368/606 3/4″ M REFILL.14 INJ H DLFC 2.00 GPM12/230V 50HZ EURO PLUG	10	27		
AB500	VAL.368/606 3/4″ M REF.14 INJ E DLFC 0.9 GPM 12/230V 50HZ EUR P+ BYPASS	10	28		
AB501	VAL.368/606 3/4″ M REF.14 INJ F DLFC 1.20 GPM 12/230V 50HZ EUR P+ BYPASS	10	28		
AB502	VAL.368/606 3/4″ M REF.14 INJ G DLFC 1.60 GPM 12/230V 50HZ EUR P+ BYPASS	10	28		
AB503	VAL.368/606 3/4″ M REF.14 INJ H DLFC 2.00 GPM 12/230V 50HZ EUR P+ BYPASS	10	28		

Characteristics:	
Pressure vessel connection	Threaded 2 ½” 8 UN male
Brine line connection	Threaded ⅜” NPT male
Distributor tube O. D. diameter	1,05” (= 27 mm)
Distributor tube length above pressure vessel	± ½” (= ± 13 mm)
Weight (valve + controller)	1,7 kg
Operating pressure	1,38 ÷ 8,27 bar
Water temperature	2°C ÷ 38°C

Box: WxLxH	Box: Q.ty	Box: Weight	Pallet: WxLxH	Pallet: Q.ty	Pallet: Weight
28x80x35	4	11,4	120x80x225	96	29,0

Certificates	Manufacturer	Sectors
DM174-2004 ACS CE, EAC	Pentair	Domestic, Commercial

Autotrol Residential Valves Series 255 with 460 tc Controller

- For automatic and residential water softening systems;
- valve body in NSF listed Noryl plastic material;
- valve rubber compounded for cold water, NSF listed material;
- operating flow rate Kv = 3,4;
- backwash flow rate = 22,7 lpm @ Δp 1,72 bar;
- resin volume range = 5 ÷ 75 litres;
- available with series 400 controller;
- 460tc electronic chronometric;
- with European transformer 12/230V – 50Hz;
- adapters and manifold kit not included, to order separately;
- accessories (e.g. upper screen, etc.) not included.

Ref	Description	Fam.	Subfam.		
AA310	VALV. 255/460tc 59´ A-A 07 12/220V 50HZ SYM	10	5		
AA311	VALV. 255/460tc 59´ A-A 08 12/220V 50HZ SYM	10	5		
AA313	VALV. 255/460tc 118´ A-A 08 12/220V 50HZ SYM	10	5		
AA315	VALV. 255/460TC 118´ B-B 10 12/220V 50HZ SYM	10	5		

Characteristics :	
Pressure vessel connection	Threaded 2 ½” 8 UN male
Brine line connection	Threaded ¼” NPT male
Distributor tube O. D. diameter	1,05” (= 27 mm)
Distributor tube length above pressure vessel	29 ± 3 mm
Weight (valve + controller)	1,8 kg
Operating pressure	1,38 ÷ 8,27 bar
Water temperature	2°C ÷ 38°C

Box: WxLxH	Box: Q.ty	Box: Weight	Pallet: WxLxH	Pallet: Q.ty	Pallet: Weight
	4				

Certificates	Manufacturer	Sectors
DM174-2004 ACS CE, EAC	Pentair	Domestic

Autotrol Residential Valves Series 255 with Series Logix Controller

- For automatic and residential water softening systems;
- valve body in NSF listed Noryl plastic material;
- valve rubber compounded for cold water, NSF listed material; operating flow rate Kv = 3,4;
- backwash flow rate = 22,7 lpm @ Δp 1,72 bar;
- resin volume range = 5 ÷ 75 litres;
- available with series LOGIX controller:
- 740 C electronic chronometric;
- 760 C electronic volumetric;
- 742 C electronic chronometric programmable;
- 762 C electronic volumetric programmable;
- with European transformer 12/230V – 50Hz;
- adapters and manifold kit not included, to order sep arately;
- accessories (e.g. upper screen, etc.) not included.

Ref	Description	Fam.	Subfam.		
AA203E	VALV. 255/740C BW 07 INJ F SYMBOL 12/230V 50HZ EURO PLUG	10	6		
AA212E	VALV. 255/740C BW 10 INJ J SYMBOL 12/230V 50HZ EURO PLUG	10	6		
AA212EE	VALV. 255/740C BW 10 INJ J SYMBOL 12/230V 50HZ ENG. PLUG	10	6		
AA101E	VALV. 255/742C .33 F 07 SYMBOL 12/230V 50HZ EUROPLUG	10	7		
AA104E	VALV. 255/742C .33 J 10 SYMBOL 12/230V 50HZ EUROPLUG	10	7		
AC203E	VALV. 255/760C BW 07 INJ F SYMBOL 12/230V 50HZ EURO PLUG	10	16		
AC206E	VALV. 255/760C BW 08 INJ G SYMBOL 12/230V 50HZ EURO PLUG	10	16		
AC209E	VALV. 255/760C BW 09 INJ H SYMBOL 12/230V 50HZ EURO PLUG	10	16		
AC212E	VALV. 255/760C BW 10 INJ J SYMBOL 12/230V 50HZ EURO PLUG	10	16		
AC212EE	VALV. 255/760C BW 10 INJ J SYMBOL 12/230V 50HZ ENG. PLUG	10	16		
AC215E	VALV. 255/760C BW 12 INJ K SYMBOL 12/230V 50HZ EURO PLUG	10	16		
AC218E	VALV. 255/760C BW 13 INJ L SYMBOL 12/230V 50HZ EURO PLUG	10	16		
AC221E	VALV. 255/760C BW 14 INJ L SYMBOL 12/230V 50HZ EURO PLUG	10	16		
AC101E	VALV. 255/762C .33 F 07 SYMBOL 12/230V 50HZ EUROPLUG	10	17		
AC102E	VALV. 255/762C .33 G 08 SYMBOL 12/230V 50HZ EUROPLUG	10	17		
AC104E	VALV. 255/762C .33 J 10 SYMBOL 12/230V 50HZ EUROPLUG	10	17		
AC105E	VALV. 255/762C .33 K 12 SYMBOL 12/230V 50HZ EUROPLUG	10	17		
AC106E	VALV. 255/762C .33 L 13 SYMBOL 12/230V 50HZ EUROPLUG	10	17		

Characteristics :	
Pressure vessel connection	Threaded 2 ½” 8 UN male
Brine line connection	Threaded ¼” NPT male
Distributor tube O. D. diameter	1,05” (= 27 mm)
Distributor tube length above pressure vessel	29 ± 3 mm
Weight (valve + controller)	1,8 kg
Operating pressure	1,38 ÷ 8,27 bar
Water temperature	2°C ÷ 38°C

Box: WxLxH	Box: Q.ty	Box: Weight	Pallet: WxLxH	Pallet: Q.ty	Pallet: Weight
40x55x50	4	14,3	120x80x210	64	245

Certificates	Manufacturer	Sectors
DM174-2004, ACS, CE, EAC	Pentair	Domestic

Residential Duplex Systems with Autotrol Valves Series 255 Twin and 764 Controller

- For automatic and residential / commercial water softening systems;
- For twin alternating and twin parallel systems;
- consisting of n.2 valves (one “main” and another one “secondary”) with 764 electronic volumetric;
- with European transformer 12/230V – 50Hz;
- valve body in NSF listed Noryl plastic material;
- valve rubber compounded for cold water, NSF listed material;
- operating flow rate for each tank Kv = 3,4;
- backwash flow rate for each tank = 22,7 lpm @ Δp 1,72 bar;
- resin volume range for each tank = 5 ÷ 75 litres;
- interconnection kit (REF. AV119) and accessories (e.g. upper screen, etc.) not included, to order separately.

Ref	Description	Fam.	Subfam.		
AF054E	VALV. 255/764 TWIN BW 10 INJ J SYMBOL 12/230V 50HZ EURO PLUG	10	30		
AF056E	VALV. 255/764 TWIN BW 13 INJ L SYMBOL 12/230V 50HZ EURO PLUG	10	30		

Characteristics:	
Pressure vessel connection	Threaded 2 ½” 8 UN male
Drain line connection	Threaded ½ male, included in interconnection kit
Brine line connection	Threaded ¼” NPT male
Distributor tube O. D. diameter	1,05” (= 27 mm)
Distributor tube length above pressure vessel	29 ± 3 mm
Weight (valve + controller)	1,8 kg
Operating pressure	1,38 ÷ 8,27 bar
Water temperature	2°C ÷ 38°C

Box: WxLxH	Box: Q.ty	Box: Weight	Pallet: WxLxH	Pallet: Q.ty	Pallet: Weight
	2				

Certificates	Manufacturer	Sectors
DM174-2004, ACS, CE, EAC	Pentair	Domestic

Autotrol Residential Valves Series 263 with 460tc Controller

- For automatic and residential water filtration systems;
- with 460tc electronic chronometric controller;
- valve body in NSF listed Noryl plastic material;
- valve rubber compounded for cold water, NSF listed material;
- operating flow rate Kv = 5,6;
- backwash flow rate = 75,7 lpm @ Δp 1,72 bar;
- with European transformer 12/230V – 50Hz;
- adapters and manifold kit not included, to order separately;
- accessories (ex. upper screen, etc.) not included.

Ref	Description	Fam.	Subfam.		
AL060	VALV. 263/460tc 118´ BW 12 - 12V.50 HZ SYM	10	45		

Characteristics :	
Pressure vessel connection	Threaded 2 ½” 8 UN male
Drain line connection	Threaded ¾” NPT, male
Brine line connection	Threaded ⅜” NPT, male
Distributor tube O. D. diameter	1,05” (= 27 mm)
Distributor tube length above pressure vessel	29 ± 3 mm
Weight (valve + controller)	2,00 kg
Operating pressure	1,38 ÷ 8,27 bar
Water temperature	2°C ÷ 38°C

Box: WxLxH	Box: Q.ty	Box: Weight	Pallet: WxLxH	Pallet: Q.ty	Pallet: Weight
	4				

Certificates	Manufacturer	Sectors
DM174-2004, ACS, CE, EAC	Pentair	Domestic

Autotrol Residential Valves Series 268 with Series Logix Controller

- For automatic and residential water softening systems;
- valve body in NSF listed Noryl plastic material;
- valve rubber compounded for cold water, NSF listed material;
- operating flow rate Kv = 5,6;
- backwash flow rate = 75,7 lpm @ Δp 1,72 bar;
- resin volume range = 30 ÷ 125 litres;
- available with series LOGIX controller:
- 740 C electronic chronometric;
- 760 C electronic volumetric;
- 742 C electronic chronometric programmable;
- 762 C electronic volumetric programmable;
- with European transformer 12/230V – 50Hz;
- adapters and manifold kit not included, to order separately;
- accessories (e.g. upper screen, etc.) not included.

Ref	Description	Fam.	Subfam.		
AM218E	VALV. 268/740C BW 13 INJ L SYMBOL 12/230V 50HZ EURO PLUG	10	47		
AM061E	VALV. 268/742C .33 J 10 SYMBOL 12/230V 50HZ EUROPLUG	10	46		
AM062E	VALV. 268/742C .33 K 12 SYMBOL 12/230V 50HZ EUROPLUG	10	46		
AP221E	VALV. 268/760C BW 14 INJ L SYMBOL 12/230V 50HZ EURO PLUG	10	49		
AP042E	VALV. 268/762C .33 K 12 SYMBOL 12/230V 50HZ EUROPLUG	10	51		
AP044E	VALV. 268/762C .33 L 14 SYMBOL 12/230V 50HZ EUROPLUG	10	51		

Characteristics:	
Pressure vessel connection	Threaded 2 ½" 8 UN male
Drain line connection	Threaded ¾" NPT, male
Brine line connection	Threaded ⅜" NPT, male
Distributor tube O. D. diameter	1,05" (= 27 mm)
Distributor tube length above pressure vessel	½" ± ½" (= 13 ± 13 mm)
Weight (valve + controller)	2,42 kg
Operating pressure	1,38 ÷ 8,27 bar
Water temperature	2°C ÷ 38°C

Box: WxLxH	Box: Q.ty	Box: Weight	Pallet: WxLxH	Pallet: Q.ty	Pallet: Weight
	4				

Certificates	Manufacturer	Sectors
DM174-2004, ACS, CE, EAC	Pentair	Domestic

Autotrol Residential Valves Series 263 with Series Logix Controller

- For automatic and residential water filtration systems;
- valve body in NSF listed Noryl plastic material;
- valve rubber compounded for cold water, NSF listed material;
- operating flow rate Kv = 5,6;
- backwash flow rate = 75,7 lpm @ Δp 1,72 bar;
- available with series LOGIX controller:
- 740 F electronic chronometric;
- 760 F electronic volumetric;
- 742 F electronic chronometric programmable;
- 762 F electronic volumetric programmable;
- with European transformer 12/230V – 50Hz;
- adapters and manifold kit not included, to order separately:
- accessories (e.g. upper screen, etc.) not included.

Ref	Description	Fam.	Subfam.		
AL209E	VALV. 263/740F BW 13 INJ H SYMBOL 12/230V 50HZ EURO PLUG	10	43		
AL215E-00	VALV.263/740F NO BW INJ K SYMBOL 12/230V 50HZ EURO PLUG	10	43		
AL075E-00	VALV.263/742F NO BW INJ L SYMBOL 12/230V 50HZ EURO PLUG	10	41		

Characteristics:	
Pressure vessel connection	Threaded 2 ½” 8 UN male
Drain line connection	Threaded ¾” NPT, male
Brine line connection	Threaded ⅜” NPT, male
Distributor tube O. D. diameter	1,05” (= 27 mm)
Distributor tube length above pressure vessel	½” ± ½” (= 13 ± 13 mm)
Weight (valve + controller)	2,42 kg
Operating pressure	1,38 ÷ 8,27 bar
Water temperature	2°C ÷ 38°C

Box: WxLxH	Box: Q.ty	Box: Weight	Pallet: WxLxH	Pallet: Q.ty	Pallet: Weight
	4				

Certificates	Manufacturer	Sectors
DM174-2004, ACS, CE, EAC	Pentair	Domestic

Autotrol Residential Valves Series 268FA with Series Logix Controller

- For automatic and residential water 5 cycles iron removal systems;
- valve body in NSF listed Noryl plastic material;
- valve rubber compounded for cold water, NSF listed material;
- operating flow rate Kv = 5,6;
- backwash flow rate = 75,7 lpm @ Δp 1,72 bar;
- available with series LOGIX controller:
- 742 F electronic chronometric programmable;
- 762 F electronic volumetric programmable;
- with European transformer 12/230V – 50Hz;
- adapters and manifold kit not included, to order separately:
- accessories (e.g. upper screen, etc.) not included.

Ref	Description	Fam.	Subfam.		
AQ066E	VALV. 268FA/742 BW 10 GPM (13″) INJ L SYMBOL 12/230V 50HZ EURO PLUG	10	48		

Characteristics :	
Pressure vessel connection	Threaded 2 ½” 8 UN male
Drain line connection	Threaded ¾” NPT, male
Brine line connection	Threaded ⅜” NPT, male
Distributor tube O. D. diameter	1,05” (= 27 mm)
Distributor tube length above pressure vessel	½” ± ½” (= 13 ± 13 mm)
Weight (valve + controller)	2,42 kg
Operating pressure	1,38 ÷ 8,27 bar
Water temperature	2°C ÷ 38°C

Box: WxLxH	Box: Q.ty	Box: Weight	Pallet: WxLxH	Pallet: Q.ty	Pallet: Weight
	4				

Certificates	Manufacturer	Sectors
DM174-2004, ACS, CE, EAC	Pentair	Domestic

Autotrol Residential Valves Series 278 with Series Logix Controller

- For automatic water softening systems with high resin volume;
- valve body in NSF listed Noryl plastic material;
- valve rubber compounded for cold water, NSF listed material;
- operating flow rate Kv = 5,6;
- backwash flow rate = 75,7 lpm @ Δp 1,72 bar;
- resin volume range = 45 ÷ 225 litres;
- available with series LOGIX controller:
- 742 C electronic chronometric programmable;
- 762 C electronic volumetric programmable;
- with European transformer 12/230V – 50Hz;
- adapters and manifold kit not included, to order separately:
- accessories (e.g. upper screen, etc.) not included.

Ref	Description	Fam.	Subfam.		
AR104E	VALV. 278/742C 1.3 M 14 SYMBOL 12/230V 50HZ EUROPLUG	10	60		
AR105E	VALV. 278/742C 1.3 N 16 (7 GPM) SYMBOL 12/230V 50HZ EURO PLUG	10	60		
AR106E	VALV. 278/742C 1.3 Q 18 (9 GPM) SYMBOL 12/230V 50HZ EURO PLUG	10	60		
AR114E	VALV. 278/762C 1.3 M 14 SYMBOL 12/230V 50HZ EUROPLUG	10	60		
AR115E	VALV. 278/762C 1.3 N 16 (7 GPM) SYMBOL 12/230V 50HZ EURO PLUG	10	60		
AR116E	VALV. 278/762C 1.3 Q 18 (9 GPM) SYMBOL 12/230V 50HZ EURO PLUG	10	60		
AR117E	VALV. 278/762C 1.3 R 21 (12 GPM) SYMBOL 12/230V 50HZ EURO PLUG	10	60		

Characteristics :	
Pressure vessel connection	Threaded 2 ½” 8 UN male
Drain line connection	Threaded ¾” NPT, male
Brine line connection	Threaded ⅜” NPT, male
Distributor tube O. D. diameter	1,05” (= 27 mm)
Distributor tube length above pressure vessel	½” ± ½” (= 13 ± 13 mm)
Weight (valve + controller)	2,42 kg
Operating pressure	1,38 ÷ 8,27 bar
Water temperature	2°C ÷ 38°C

Box: WxLxH	Box: Q.ty	Box: Weight	Pallet: WxLxH	Pallet: Q.ty	Pallet: Weight
	4				

Certificates	Manufacturer	Sectors
DM174-2004, CS, CE, EAC	Pentair	Commercial, Industrial

Residential Duplex Systems with Autotrol Residential Valves Series 278 Twin and 764 Controller

- For automatic and residential / commercial water softening systems;
- for twin alternating and twin parallel systems;
- consisting of n.2 valves (one “main” and another one “secondary”) with 764 electronic volumetric;
- with European transformer 12/230V – 50Hz;
- valve body in NSF listed Noryl plastic material;
- valve rubber compounded for cold water, NSF listed material;
- operating flow rate for each tank Kv = 5,6;
- backwash flow rate for each tank = 75,7 lpm @ Δp 1,72 bar;
- resin volume range for each tank = 45 ÷ 225 litres;
- interconnection kit and accessories (e.g. upper screen, etc.) not included, to order separately

Ref	Description	Fam.	Subfam.		
AN083E	VALV. 278/764 TWIN 1.3 M 14 SYMBOL 12/230V 50HZ EURO PLUG	10	53		
AN084E	VALV. 278/764 TWIN 1.3 N 16 (7 GPM) SYMBOL 12/230V 50HZ EURO PLUG	10	53		
AN085E	VALV. 278/764 TWIN 1.3 Q 18 (9 GPM) SYMBOL 12/230V 50HZ EURO PLUG	10	53		
AN086E	VALV. 278/764 TWIN 1.3 R 21 (12 GPM) SYMBOL 12/230V 50HZ EURO PLUG	10	53		

Characteristics :	
Pressure vessel connection	Threaded 2 ½” 8 UN male
Drain line connection	Threaded ¾” NPT, male
Brine line connection	Threaded ⅜” NPT, male
Distributor tube O. D. diameter	1,05” (= 27 mm)
Distributor tube length above pressure vessel	½” ± ½” (= 13 ± 13 mm)
Weight (valve + controller)	2,42 kg
Operating pressure	1,38 ÷ 8,27 bar
Water temperature	2°C ÷ 38°C

Box: WxLxH	Box: Q.ty	Box: Weight	Pallet: WxLxH	Pallet: Q.ty	Pallet: Weight
40x55x50	2	14,3	120x80x210	32	245

Certificates	Manufacturer	Sectors
DM174-2004, ACS, CE, EAC	Pentair	Commercial, Industrial

Autotrol Residential Valves Series 278 with 764 Controller for Multitank Systems

- For automatic and residential / commercial water softening systems;
- with electronic volumetric 764 controller;
- for parallel systems;
- valve body in NSF listed Noryl plastic material;
- valve rubber compounded for cold water, NSF listed material;
- operating flow rate for each tank Kv = 5,6;
- backwash flow rate for each tank = 75,7 lpm @ Δp 1,72 bar;
- resin volume range for each tank = 45 ÷ 225 litres;
- with European transformer 12/230V – 50Hz for each valve;
- adapters and manifold kit not included, to order separately
- accessories (e.g. upper screen, etc.) not included.

Ref	Description	Fam.	Subfam.		
AN103E	VALV. 278/764L 1.3 M 14 SYMBOL 12/230V 50HZ EUROPLUG	10	53		

Characteristics :	
Pressure vessel connection	Threaded 2 ½" 8 UN male
Drain line connection	Threaded ¾" NPT, male
Brine line connection	Threaded ⅜" NPT, male
Distributor tube O. D. diameter	1,05" (= 27 mm)
Distributor tube length above pressure vessel	½" ± ½" (= 13 ± 13 mm)
Weight (valve + controller)	2,42 kg
Operating pressure	1,38 ÷ 8,27 bar
Water temperature	2°C ÷ 38°C

Box: WxLxH	Box: Q.ty	Box: Weight	Pallet: WxLxH	Pallet: Q.ty	Pallet: Weight
	4				

Certificates	Manufacturer	Sectors
DM174-2004, ACS, CE, EAC	Pentair	Commercial, Industrial

Autotrol Industrial Softening Magnum CV 1,5” Valves with Series Logix Controller

- For automatic and industrial water softening systems;
- valve body in NSF listed Noryl plastic material with 304 Stainless Steel tank adapter (for heavy applications, like iron removal using KMnO4 or decarbonisation using HCl, the Noryl tank adapter is available on request);
- o-rings in EPDM material;
- operating flow rate Kv = 17,3;
- backwash flow rate = 337 lpm @ Δp 1,72 bar;
- resin volume range = 100 ÷ 700 litres;
- available with series LOGIX controller;
- 742 electronic chronometric programmable;
- 762 electronic volumetric programmable;
- with European transformer 12/230V – 50/60 Hz;
- available with or without by-pass;
- adapters, manifold kit and accessories (e.g. upper screen, etc.) not included, to order separately;
- brine tank refill system doesn’t need a brine valve, but just an air-check;
- PVC 2” side mounting adapter available on demand;
- if you want to connect the 2" turbine, you must order our ref. CD163 separately.

Ref	Description	Fam.	Subfam.		
CA201E	MAGNUM 1.5″ 298/742 16″ (6 GPM) HWB SYMBOL 12/230V 50HZ EURO PLUG	20	80		
CA205E	MAGNUM 1.5″ 298/742 30″ (20 GPM) HWB SYMBOL 12/230V 50HZ EURO PLUG	20	80		
CA215E	MAGNUM 1.5″ 298/742 30″ (20 GPM) NHB SYMBOL 12/230V 50HZ EURO PLUG	20	80		
CA221E	MAGNUM 1.5″ 298/762 16″ (6 GPM) HWB SYMBOL 12/230V 50HZ EURO PLUG	20	80		
CA222E	MAGNUM 1.5″ 298/762 18″ (8 GPM) HWB SYMBOL 12/230V 50HZ EURO PLUG	20	80		
CA236E	MAGNUM 1.5″ 298/762 36″ (30 GPM) NHB SYMBOL 12/230V 50HZ EURO PLUG	20	80		

Characteristics:	
Pressure vessel connection	Threaded 4” - 8 UN male
Drain line connection	1,5” SS – NPT/BSPT male D50 CPVC to glue
Brine line connection	Threaded ¾” NPT male
Distributor tube O. D. diameter	1,5” (= 48,3 mm)
Pilot drain and auxiliary hydraulic out	¼” tube fitting Jaco
Distributor tube length above pressure vessel	16 ± 3 mm
Weight (valve + controller)	12,3 kg
Operating pressure	1,72 ÷ 6,90 bar
Water temperature	1°C ÷ 36°C

Box: WxLxH	Box: Q.ty	Box: Weight	Pallet: WxLxH	Pallet: Q.ty	Pallet: Weight
41x60x50	1	17,0	120x80x210	16	28,5

Certificates	Manufacturer	Sectors
DM174-2004 CE, EAC	Pentair	Commercial, Industrial

Autotrol Industrial Magnum CV 1,5” Valves for Filtration with Series Logix Controller

- For automatic and industrial water filtration systems;
- valve body in NSF listed Noryl plastic material with 304 Stainless Steel tank adapter (for heavy applications, like sea water, the Noryl tank adapter is available on request);
- o-rings in EPDM material;
- operating flow rate Kv = 17,3;
- backwash flow rate = 337 lpm @ Δp 1,72 bar;
- available with series LOGIX controller
- 742 F electronic chronometric programmable;
- 762 F electronic volumetric programmable;
- with European transformer 12/230V – 50/60 Hz;
- available with or without by-pass;
- adapters, manifold kit and accessories (e.g. upper screen, etc.) not included, to order separately
- PVC 2” side mounting adapter available on demand (REF. CC084).

Ref	Description	Fam.	Subfam.		
CA240E	MAGNUM 1.5″ 293/742F (5 GPM) UWB SYMBOL 12/230V 50HZ EURO PLUG	20	80		
CA241E	MAGNUM 1.5″ 293/742F (5 GPM) NUB SYMBOL 12/230V 50HZ EURO PLUG	20	80		

Characteristics:	
Pressure vessel connection	Threaded 4” - 8 UN male
Drain line connection	1,5” SS – NPT/BSPT male D50 CPVC to glue
Brine line connection	Threaded ¾” NPT male
Distributor tube O. D. diameter	1,5” (= 48,3 mm)
Pilot drain and auxiliary hydraulic out	¼” tube fitting Jaco
Distributor tube length above pressure vessel	16 ± 3 mm
Weight (valve + controller)	12,3 kg
Operating pressure	1,72 ÷ 6,90 bar
Water temperature	1°C ÷ 36°C

Box: WxLxH	Box: Q.ty	Box: Weight	Pallet: WxLxH	Pallet: Q.ty	Pallet: Weight
	1				

Certificates	Manufacturer	Sectors
DM174-2004 CE, EAC	Pentair	Commercial, Industrial

Autotrol Industrial Softening Magnum IT 2” Valves with Series Logix Controller

- for automatic and industrial water softening systems;
- valve body in NSF listed Noryl plastic material with 304 Stainless Steel tank adapter (for heavy applications, like iron removal using
- KMnO4 or decarbonisation using HCl, the Noryl tank adapter is available on request);
- o-rings in EPDM material;
- operating flow rate Kv = 18,2;
- backwash flow rate = 337 lpm @ Δp 1,72 bar;
- resin volume range = 100 ÷ 700 litres;
- available with series LOGIX controller:
- 742 electronic chronometric programmable;
- 762 electronic volumetric programmable;
- with European transformer 12/230V – 50/60 Hz;
- available with or without by-pass;
- adapters, manifold kit and accessories (e.g. upper screen, etc.) not included, to order separately;
- brine tank refill system doesn’t need a brine valve, but just an air-check;
- PVC 2” side mounting adapter available on demand (REF. CC084).

Ref	Description	Fam.	Subfam.		
CB202E	MAGNUM IT 2″ 298/742 18″ (8 GPM) HWB SYMBOL 12/230V 50HZ EURO PLUG	20	81		
CB221E	MAGNUM IT 2″ 298/762 16″ (6 GPM) HWB SYMBOL 12/230V 50HZ EURO PLUG	20	81		
CB222E	MAGNUM IT 2″ 298/762 18″ (8 GPM) HWB SYMBOL 12/230V 50HZ EURO PLUG	20	81		
CB223E	MAGNUM IT 2″ 298/762 21″ (10 GPM) HWB SYMBOL 12/230V 50HZ EURO PLUG	20	81		
CB224E	MAGNUM IT 2″ 298/762 24″ (14 GPM) HWB SYMBOL 12/230V 50HZ EURO PLUG	20	81		
CB226E	MAGNUM IT 2″ 298/762 36″ (30 GPM) HWB SYMBOL 12/230V 50HZ EURO PLUG	20	81		
CB234E	MAGNUM IT 2″ 298/762 24″ (14 GPM) NHB SYMBOL 12/230V 50HZ EURO PLUG	20	81		
CB236E	MAGNUM IT 2″ 298/762 36″ (30 GPM) NHB SYMBOL 12/230V 50HZ EURO PLUG	20	81		

Characteristics:	
Pressure vessel connection	Threaded 4” - 8 UN male
Drain line connection	1,5” SS – NPT/BSPT male D50 CPVC to glue
Brine line connection	Threaded ¾” NPT male
Distributor tube O. D. diameter	1,5” (= 48,3 mm)
Pilot drain and auxiliary hydraulic out	Jaco ¼” tubo
Distributor tube length above pressure vessel	16 ± 3 mm
Weight (valve + controller)	12,3 kg
Operating pressure	1,72 ÷ 6,90 bar
Water temperature	1°C ÷ 36°C

Box: WxLxH	Box: Q.ty	Box: Weight	Pallet: WxLxH	Pallet: Q.ty	Pallet: Weight
	1				

Certificates	Manufacturer	Sectors
DM174-2004 CE, EAC	Pentair	Commercial, Industrial

Autotrol Industrial Magnum IT 2” Valves for Filtration with Series Logix Controller

- For automatic and industrial water filtration systems;
- valve body in NSF listed Noryl plastic material with 304 Stainless Steel tank adapter (for heavy applications, like sea water, the Noryl tank adapter is available on request);
- o-rings in EPDM material;
- operating flow rate Kv = 18,2;
- backwash flow rate = 337 lpm @ Δp 1,72 bar;
- available with series LOGIX controller;
- 742 F electronic chronometric programmable;
- 762 F electronic volumetric programmable;
- with European transformer 12/230V – 50/60 Hz;
- available with or without by-pass;
- adapters, manifold kit and accessories (e.g. upper screen, etc.) not included, to order separately;
- PVC 2” side mounting adapter available on demand (REF. CC084).

Ref.	Description	Fam.	Subfam.		
CB240E	MAGNUM IT 2″ 293/742F (5 GPM) UWB SYMBOL 12/230V50HZ EURO PLUG	20	81		
CB241E	MAGNUM IT 2″ 293/742F (5 GPM) NUB SYMBOL 12/230V50HZ EURO PLUG	20	81		
CB245E	MAGNUM IT 2″ 293/762F (5 GPM)NUB SYMBOL 12/230V50HZ EURO PLUG	20	81		

Characteristics :	
Pressure vessel connection	Threaded 4” - 8 UN male
Drain line connection	1,5” SS – NPT/BSPT male D50 CPVC to glue
Brine line connection	Threaded ¾” NPT male
Distributor tube O. D. diameter	1,5” (= 48,3 mm)
Pilot drain and auxiliary hydraulic out	¼” tube fitting Jaco
Distributor tube length above pressure vessel	16 ± 3 mm
Weight (valve + controller)	12,3 kg
Operating pressure	1,72 ÷ 6,90 bar
Water temperature	1°C ÷ 36°C

Box: WxLxH	Box: Q.ty	Box: Weight	Pallet: WxLxH	Pallet: Q.ty	Pallet: Weight
	1				

Certificates	Manufacturer	Sectors
DM174-2004 CE, EAC	Pentair	Commercial, Industrial

Industrial Duplex Systems with Autotrol Softening Magnum IT 2” Valves and 764 Controller

- For automatic and industrial water softening systems;

- for twin alternating and twin parallel systems;
- consisting of n.2 valves (one “main” and another one “secondary”) with 764 electronic volumetric;
- valve body in NSF listed Noryl plastic material with 304 Stainless Steel tank adapter (for heavy applications, like iron removal using KMnO4 or decarbonisation using HCl, the Noryl tank adapter is available on request);
- o-rings in EPDM material;
- operating flow rate for each tank Kv = 18,2;
- backwash flow rate for each tank = 337 lpm @ Δp 1,72 bar;
- resin volume range for each tank = 100 ÷ 700 litres;
- with European transformer 12/230V – 50/60 Hz;
- available with or without by-pass;
- adapters, manifold kit and accessories (e.g. upper screen, etc.) not included, to order separately;
- brine tank refill system doesn’t need a brine valve, but just an air-check;
- PVC 2” side mounting adapter available on demand (REF. CC084);
- interconnection not included.

Ref	Description	Fam.	Subfam.		
CB250E	MAGNUM 298 2″ MIT-TWS-764-14″ (5 GPM) NHB SYMBOL12/230V 50HZ EURO PLUG	20	81		
CB251E	MAGNUM 298 2″ MIT-TWS-764-16″ (6 GPM) NHB SYMBOL12/230V 50HZ EURO PLUG	20	81		
CB252E	MAGNUM 298 2″ MIT-TWS-764-18″ (8 GPM) NHB SYMBOL12/230V 50HZ EURO PLUG	20	81		
CB253E	MAGNUM 298 2″ MIT-TWS-764-21″ (10 GPM) NHB SYMBOL12/230V 50HZ EURO PLUG	20	81		
CB254E	MAGNUM 298 2″ MIT-TWS-764-24″ (14 GPM) NHB SYMBOL12/230V 50HZ EURO PLUG	20	81		
CB255E	MAGNUM 298 2″ MIT-TWS-764-30″ (20 GPM) NHB SYMBOL12/230V 50HZ EURO PLUG	20	81		
CB256E	MAGNUM 298 2″ MIT-TWS-764-36″ (30 GPM) NHB SYMBOL12/230V 50HZ EURO PLUG	20	81		

Characteristics:	
Pressure vessel connection	Threaded 4” - 8 UN male
Drain line connection	1,5” SS – NPT/BSPT male D50 CPVC to glue
Brine line connection	Threaded ¾” NPT male
Distributor tube O. D. diameter	1,5” (= 48,3 mm)
Pilot drain and auxiliary hydraulic out	¼” tube fitting Jaco
Distributor tube length above pressure vessel	16 ± 3 mm
Weight (valve + controller)	12,3 kg
Operating pressure	1,72 ÷ 6,90 bar
Water temperature	1°C ÷ 36°C

Box: WxLxH	Box: Q.ty	Box: Weight	Pallet: WxLxH	Pallet: Q.ty	Pallet: Weight
41x60x50	1	34,0	120x80x210	8	28,5

Certificates	Manufacturer	Sectors
DM174-2004 CE, EAC	Pentair	Commercial, Industrial

Autotrol Industrial Softening Magnum IT 2” Valves with 764 Controller for Multitank Systems

- For automatic and industrial water softening systems;
- with electronic volumetric 764 controller;
- for parallel systems;
- valve body in NSF listed Noryl plastic material with 304 Stainless Steel tank adapter (for heavy applications, like iron removal using KMnO4 or decarbonisation using HCl, the Noryl tank adapter is available on request);
- o-rings in EPDM material;
- operating flow rate for each tank Kv = 18,2;
- backwash flow rate for each tank = 337 lpm @ Δp 1,72 bar;
- resin volume range for each tank = 100 ÷ 700 litres;
- with European transformer 12/230V – 50/60 Hz for each valve;
- available with or without by-pass;
- adapters, manifold kit and accessories (e.g. upper screen, etc.) not included, to order separately;
- brine tank refill system doesn’t need a brine valve, but just an air-check;
- PVC 2” side mounting adapter available on demand;
- interconnection not included.

Ref	Description	Fam.	Subfam.		
CB266E	MAGNUM 298 2″ MIT-SN-764-36″ (30 GPM) NHB SYMBOL12/230V 50HZ EURO PLUG	20	81		

Characteristics:	
Pressure vessel connection	Threaded 4 ”- 8 UN male
Drain line connection	1,5” SS – NPT/BSPT male D50 CPVC to glue
Brine line connection	Threaded ¾” NPT male
Distributor tube O. D. diameter	1,5” (= 48,3 mm)
Pilot drain and auxiliary hydraulic out	¼” tube fitting Jaco
Distributor tube length above pressure vessel	16 ± 3 mm
Weight (valve + controller)	12,3 kg
Operating pressure	1,72 ÷ 6,90 bar
Water temperature	1°C ÷ 36°C

Box: WxLxH	Box: Q.ty	Box: Weight	Pallet: WxLxH	Pallet: Q.ty	Pallet: Weight
	1				

Certificates	Manufacturer	Sectors
DM174-2004 CE, EAC	Pentair	Commercial, Industrial

Series 400 Controllers for Autotrol Valves Series 255 - 263 – 268

Controllers for softeners characteristics

Characteristic	440i	460tc	460i
Controller type	Electromechanical	Electronic	Electronic
Regeneration mode	Chronometric: 7 or 6 day	Chronometric	Volumetric
Regeneration frequency	Daily	Daily	Daily
Regeneration cycle length	59’ or 118’	59’ or 118’	59’ or 118’
Cycle length	Fixed not modifiable	Fixed not modifiable	Fixed not modifiable
Salt setting	Pounds of salt	Pounds of salt	Pounds of salt

Controllers for filtration characteristics

Characteristic		460tc
Controller type		Electronic
Backwash mode		Chronometric
Backwash frequency		Daily
Filter cycle length		Fixed not modifiable

Logix Controllers for Autotrol Valves Series 255 – 263 – 268 – 273 – 278 – 293 – 298

Controllers for softeners characteristics

Characteristics	740 C	760 C	742 C	762 C	764
Controller type	Electronic	Electronic	Electronic	Electronic	Electronic
Regeneration mode	Chronometric	Volumetric	Chronometric	Volumetric	Volumetric
Regeneration frequency	Fixed day or 0,5 ÷ 99 days calendar override	0,5 ÷ 99 days calendar override	Fixed day or 0,5 ÷ 99 days calendar override	0,5 ÷ 99 days calendar override	0,5 ÷ 99 days calen dar override
Adjustable regenera tion time	Yes	Yes	Yes	Yes	Yes
Cycle length	Computer calculated	Computer calculated	Fully programmable	Fully programmable	Fully programmable
Salt setting	3 options	3 options	Fully adjustable	Fully adjustable	Fully adjustable

Controllers for filtration characteristics

Characteristics	740 F	760 F	742 F	762 F	764 F
Controller type	Electronic	Electronic	Electronic	Electronic	Electronic
Backwash mode	Chronometric	Volumetric	Chronometric	Volumetric	Volumetric
Backwash frequency	Fixed day or 0,5 ÷ 99 days calendar override	0,5 ÷ 99 days calendar override	Fixed day or 0,5 ÷ 99 days calendar override	0,5 ÷ 99 days calendar override	0,5 ÷ 99 days calendar override
Adjustable cycle times	Programmable back wash time	Programmable back wash time	Fully programmable	Fully programmable	Fully programmable
Filter cycle length	Computer calculated	Computer calculated	Fully adjustable	Fully adjustable	Fully adjustable

368/604 VALVE PARTS LIST

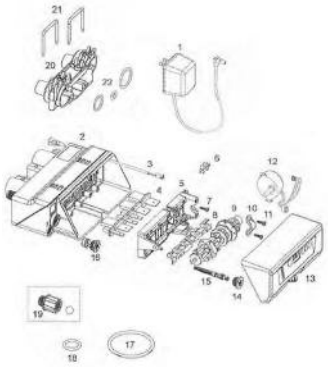

Number	Ref	P.N.	Description	Fam.	Subfam.		
1	AW500	1000814	EUROPEAN TRANFORMER 230/12V	10	64		
1	AW501	1000813	BRITISH TRANFORMER	10	64		
4	AW250	3007947	VALVE DISCS KIT FOR 366 367 368	10	64		
6	AW129	1235373	OPTIC SENSOR P/N 1235373	10	64		
7	AW174	3030450	TOP PLATE SCREW NO 8x9/16″	10	64		
8	AW252	3022017	SPRING ONE PIECE 366 367 368	10	64		
9	AW253	3022014	CAMSHAFT FOR 366 367 368	10	64		
10	CD100	1000589	PILLOW BLOCK CAP	20	83		
11	AW174	3030450	TOP PLATE SCREW NO 8x9/16″	10	64		
12	AW254	3026537	MOTOR CABLE ASSEMBLY 366 367 368	10	64		
13	AW280	4001737	TIMER 604 12V 50-60HZ	10	64		
14	AW107	1000269	INJECTOR CAP/BACKWASH OPEN 00	10	64		
15	AW266	3025326	SCREEN ASSEMBLY INJECTOR E YELLOW WITH O-RING + FILTER 366 367 368	10	64		
15	AW267	3025327	SCREEN ASSEMBLY INJECTOR F PEACH WITH O-RING + FILTER 366 367 368	10	64		
15	AW268	3025328	SCREEN ASSEMBLY INJECTOR G TAN WITH O-RING + FILTER 366 367 368	10	64		
15	AW269	3025329	SCREEN ASSEMBLY INJECTOR H LIGHT PURPLE WITH O-RING + FILTER 366 367 368	10	64		
16	AW115	1000221	BRINE REFILL CONTROL ASSEMBLY .14GPM	10	64		
17	AW172	3029969	O-RING ADAPTER FOR PRESSURE VESSEL 2.1/2″	10	64		
18	AW169	3030918	O-RING 1.05″	10	64		
19	AV146	3031526	EXTERNAL BACKWASH CONTROL PEANUT 0.9 GPM # 06	10	62		
19	AV147	3031527	EXTERNAL BACKWASH CONTROL PEANUT 1.20 GPM # 07	10	62		
19	AV148	3031528	EXTERNAL BACKWASH CONTROL PEANUT 1.60 GPM # 08	10	62		
19	AV149	3031529	EXTERNAL BACKWASH CONTROL PEANUT 2.00 GPM # 09	10	62		
20	AW255	3027832	MANIFOLD 3/4″ BSPT INLET/OUTLET	10	64		
22	AW257	3031825	O-RING KIT MANIFOLD 367	10	64		
Not shown	AV185	3022042	MIXING VALVE FOR 366-368 VALVE	10	62		

368/606 VALVE PARTS LIST

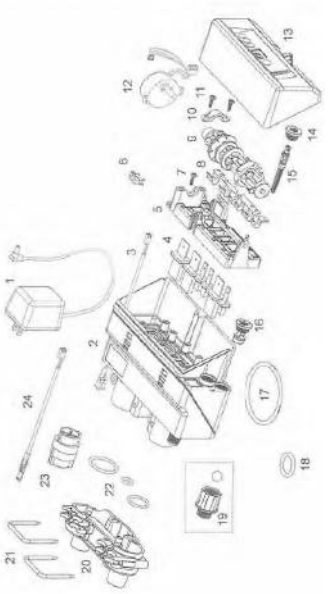

Number	Ref	P.N.	Description	Fam.	Subfam.		
1	AW500	1000814	EUROPEAN TRANFORMER 230/12V	10	64		
1	AW501	1000813	BRITISH TRANFORMER	10	64		
4	AW250	3007947	VALVE DISCS KIT FOR 366 367 368	10	64		
6	AW129	1235373	OPTIC SENSOR P/N 1235373	10	64		
7	AW174	3030450	TOP PLATE SCREW NO 8x9/16″	10	64		
8	AW252	3022017	SPRING ONE PIECE 366 367 368	10	64		
9	AW253	3022014	CAMSHAFT FOR 366 367 368	10	64		
10	CD100	1000589	PILLOW BLOCK CAP	20	83		
11	AW174	3030450	TOP PLATE SCREW NO 8x9/16″	10	64		
12	AW254	3026537	MOTOR CABLE ASSEMBLY 366 367 368	10	64		
13	AW281	4001738	TIMER 606 12V 50-60HZ	10	64		
14	AW107	1000269	INJECTOR CAP/BACKWASH OPEN 00	10	64		
15	AW266	3025326	SCREEN ASSEMBLY INJECTOR E YELLOW WITH O-RING + FILTER 366 367 368	10	64		
15	AW267	3025327	SCREEN ASSEMBLY INJECTOR F PEACH WITH O-RING + FILTER 366 367 368	10	64		
15	AW268	3025328	SCREEN ASSEMBLY INJECTOR G TAN WITH O-RING + FILTER 366 367 368	10	64		
15	AW269	3025329	SCREEN ASSEMBLY INJECTOR H LIGHT PURPLE WITH O-RING + FILTER 366 367 368	10	64		
16	AW115	1000221	BRINE REFILL CONTROL ASSEMBLY .14GPM	10	64		
17	AW172	3029969	O-RING ADAPTER FOR PRESSURE VESSEL 2.1/2″	10	64		
18	AW169	3030918	O-RING 1.05″	10	64		
19	AV146	3031526	EXTERNAL BACKWASH CONTROL PEANUT 0.9 GPM # 06	10	62		
19	AV147	3031527	EXTERNAL BACKWASH CONTROL PEANUT 1.20 GPM # 07	10	62		
19	AV148	3031528	EXTERNAL BACKWASH CONTROL PEANUT 1.60 GPM # 08	10	62		
19	AV149	3031529	EXTERNAL BACKWASH CONTROL PEANUT 2.00 GPM # 09	10	62		
20	AW255	3027832	MANIFOLD 3/4″ BSPT INLET/OUTLET	10	64		
21	AW256	3027831	CLIP ATTACCO VALV. 367	10	64		
22	AW257	3031825	O-RING KIT MANIFOLD 367	10	64		
24	AW259	3027837	TURBINE CABLE 367	10	64		
Not shown	AV185	3022042	MIXING VALVE FOR 366-368 VALVE	10	62		

368/606B VALVE EXPLODED VIEW

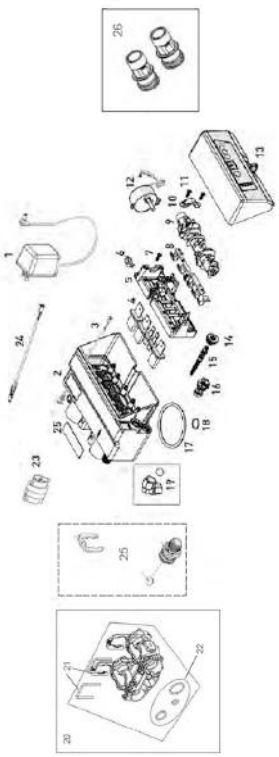

Number	Ref	P.N.	Description	Fam.	Subfam.		
1	AW500	1000814	EUROPEAN TRANFORMER 230/12V	10	64		
1	AW501	1000813	BRITISH TRANFORMER	10	64		
4	AW250	3007947	VALVE DISCS KIT FOR 366 367 368	10	64		
6	AW129	1235373	OPTIC SENSOR P/N 1235373	10	64		
7	AW174	3030450	TOP PLATE SCREW NO 8x9/16″	10	64		
8	AW252	3022017	SPRING ONE PIECE 366 367 368	10	64		
9	AW253	3022014	CAMSHAFT FOR 366 367 368	10	64		
10	CD100	1000589	PILLOW BLOCK CAP	20	83		
11	AW174	3030450	TOP PLATE SCREW NO 8x9/16″	10	64		
12	AW254	3026537	MOTOR CABLE ASSEMBLY 366 367 368	10	64		
13	AW281	4001738	TIMER 606 12V 50-60HZ	10	64		
14	AW107	1000269	INJECTOR CAP/BACKWASH OPEN 00	10	64		
15	AW266	3025326	SCREEN ASSEMBLY INJECTOR E YELLOW WITH O-RING + FILTER 366 367 368	10	64		
15	AW267	3025327	SCREEN ASSEMBLY INJECTOR F PEACH WITH O-RING + FILTER 366 367 368	10	64		
15	AW268	3025328	SCREEN ASSEMBLY INJECTOR G TAN WITH O-RING + FILTER 366 367 368	10	64		
15	AW269	3025329	SCREEN ASSEMBLY INJECTOR H LIGHT PURPLE WITH O-RING + FILTER 366 367 368	10	64		
16	AW115	1000221	BRINE REFILL CONTROL ASSEMBLY .14GPM	10	64		
17	AW172	3029969	O-RING ADAPTER FOR PRESSURE VESSEL 2.1/2″	10	64		
18	AW169	3030918	O-RING 1.05″	10	64		
19	AV174		ELBOW DRAIN FITTING 1/2″ F	10	62		
20	AW290	4000886	BYPASS VALVE 368/606	10	64		
22	AW257	3031825	O-RING KIT MANIFOLD 367	10	64		
24	AW259	3027837	TURBINE CABLE 367	10	64		
25	AV146B	4001297	EXTERNAL BACKWASH CONTROL 368 BYPASS 0.90 GPM # 0	10	62		
25	AV147B	4001298	EXTERNAL BACKWASH CONTROL 368 BYPASS 1.20 GPM # 0	10	62		
25	AV148B	4001299	EXTERNAL BACKWASH CONTROL 368 BYPASS 1.60 GPM # 0	10	62		
25	AV149B	4001300	EXTERNAL BACKWASH CONTROL 368 BYPASS 2.0 GPM # 09	10	62		
26	AW275	4001606	KIT 3/4″ BSP CONNECTORS	10	64		
Not shown	AV185	3022042	MIXING VALVE FOR 366-368 VALVE	10	62		

366/604 VALVE PARTS LIST

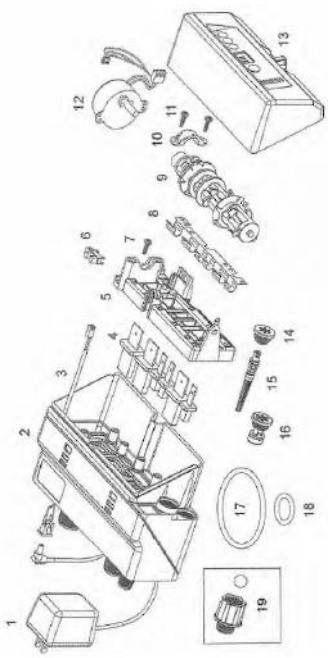

Number	Ref	P.N.	Description	Fam.	Subfam.		
1	AW500	1000814	EUROPEAN TRANFORMER 230/12V	10	64		
1	AW501	1000813	BRITISH TRANFORMER	10	64		
4	AW250	3007947	VALVE DISCS KIT FOR 366 367 368	10	64		
6	AW129	1235373	OPTIC SENSOR P/N 1235373	10	64		
7	AW174	3030450	TOP PLATE SCREW NO 8x9/16″	10	64		
8	AW252	3022017	SPRING ONE PIECE 366 367 368	10	64		
9	AW253	3022014	CAMSHAFT FOR 366 367 368	10	64		
10	CD100	1000589	PILLOW BLOCK CAP	20	83		
11	AW174	3030450	TOP PLATE SCREW NO 8x9/16″	10	64		
12	AW254	3026537	MOTOR CABLE ASSEMBLY 366 367 368	10	64		
13	AW280	4001737	TIMER 604 12V 50-60HZ	10	64		
14	AW107	1000269	INJECTOR CAP/BACKWASH OPEN 00	10	64		
15	AW266	3025326	SCREEN ASSEMBLY INJECTOR E YELLOW WITH O-RING + FILTER 366 367 368	10	64		
15	AW267	3025327	SCREEN ASSEMBLY INJECTOR F PEACH WITH O-RING + FILTER 366 367 368	10	64		
15	AW268	3025328	SCREEN ASSEMBLY INJECTOR G TAN WITH O-RING + FILTER 366 367 368	10	64		
15	AW269	3025329	SCREEN ASSEMBLY INJECTOR H LIGHT PURPLE WITH O-RING + FILTER 366 367 368	10	64		
16	AW115	1000221	BRINE REFILL CONTROL ASSEMBLY .14GPM	10	64		
17	AW172	3029969	O-RING ADAPTER FOR PRESSURE VESSEL 2.1/2″	10	64		
18	AW169	3030918	O-RING 1.05″	10	64		
19	AV146	3031526	EXTERNAL BACKWASH CONTROL PEANUT 0.9 GPM # 06	10	62		
19	AV147	3031527	EXTERNAL BACKWASH CONTROL PEANUT 1.20 GPM # 07	10	62		
19	AV148	3031528	EXTERNAL BACKWASH CONTROL PEANUT 1.60 GPM # 08	10	62		
19	AV149	3031529	EXTERNAL BACKWASH CONTROL PEANUT 2.00 GPM # 09	10	62		
Not shown	AV185	3022042	MIXING VALVE FOR 366-368 VALVE	10	62		

367/606 VALVE PARTS LIST

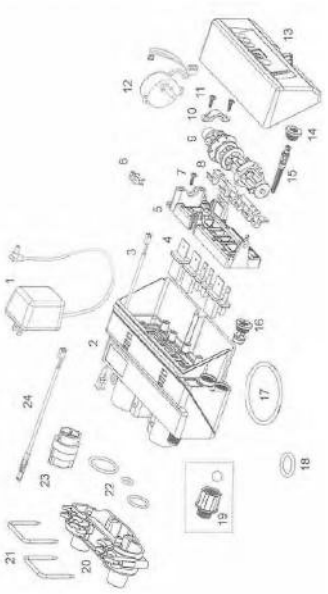

Number	Ref	P.N.	Description	Fam.	Subfam.		
1	AW500	1000814	EUROPEAN TRANFORMER 230/12V	10	64		
1	AW501	1000813	BRITISH TRANFORMER	10	64		
4	AW250	3007947	VALVE DISCS KIT FOR 366 367 368	10	64		
6	AW129	1235373	OPTIC SENSOR P/N 1235373	10	64		
7	AW174	3030450	TOP PLATE SCREW NO 8x9/16″	10	64		
8	AW252	3022017	SPRING ONE PIECE 366 367 368	10	64		
9	AW253	3022014	CAMSHAFT FOR 366 367 368	10	64		
10	CD100	1000589	PILLOW BLOCK CAP	20	83		
11	AW174	3030450	TOP PLATE SCREW NO 8x9/16″	10	64		
12	AW254	3026537	MOTOR CABLE ASSEMBLY 366 367 368	10	64		
13	AW281	4001738	TIMER 606 12V 50-60HZ	10	64		
14	AW107	1000269	INJECTOR CAP/BACKWASH OPEN 00	10	64		
15	AW266	3025326	SCREEN ASSEMBLY INJECTOR E YELLOW WITH O-RING + FILTER 366 367 368	10	64		
15	AW267	3025327	SCREEN ASSEMBLY INJECTOR F PEACH WITH O-RING + FILTER 366 367 368	10	64		
15	AW268	3025328	SCREEN ASSEMBLY INJECTOR G TAN WITH O-RING + FILTER 366 367 368	10	64		
15	AW269	3025329	SCREEN ASSEMBLY INJECTOR H LIGHT PURPLE WITH O-RING + FILTER 366 367 368	10	64		
16	AW115	1000221	BRINE REFILL CONTROL ASSEMBLY .14GPM	10	64		
17	AW172	3029969	O-RING ADAPTER FOR PRESSURE VESSEL 2.1/2″	10	64		
18	AW169	3030918	O-RING 1.05″	10	64		
19	AV146	3031526	EXTERNAL BACKWASH CONTROL PEANUT 0.9 GPM # 06	10	62		
19	AV147	3031527	EXTERNAL BACKWASH CONTROL PEANUT 1.20 GPM # 07	10	62		
19	AV148	3031528	EXTERNAL BACKWASH CONTROL PEANUT 1.60 GPM # 08	10	62		
19	AV149	3031529	EXTERNAL BACKWASH CONTROL PEANUT 2.00 GPM # 09	10	62		
20	AW255	3027832	MANIFOLD 3/4″ BSPT INLET/OUTLET	10	64		
21	AW256	3027831	CLIP ATTACCO VALV. 367	10	64		
22	AW257	3031825	O-RING KIT MANIFOLD 367	10	64		
24	AW259	3027837	TURBINE CABLE 367	10	64		
Not shown	AV185	3022042	MIXING VALVE FOR 366-368 VALVE	10	62		

255-440i/460i/460TC VALVE EXPLODED VIEW & PARTS LIST

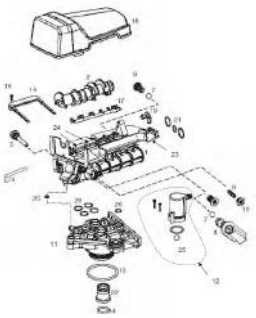

Number	Ref	P.N.	Description	Fam.	Subfam.		
	AW164A		255/400 VALVE ASSEMBLY NEW STYLE PLATE W/O FLOW CONTROLS	10	64		
1+17+19+23+24	AW164A	1000232	255/400 VALVE ASSEMBLY NEW STYLE PLATE W/O FLOW CONTROLS	10	64		
3	AW146A	1030501	CAMSHAFT BEARING FOR COVER Lid NEW STYLE	10	64		
5	AW125	1000226	SCREEN/CAP ASSEMBLY WITH O-RING	10	64		
6	AW100	1000209	BACKWASH CONTROL 07 WITH O-RING	10	64		
6	AW101	1000210	BACKWASH CONTROL 08 WITH O-RING	10	64		
6	AW102	1000211	BACKWASH CONTROL 09 WITH O-RING	10	64		
6	AW103	1000212	BACKWASH CONTROL 10 WITH O-RING	10	64		
6	AW104	1000213	BACKWASH CONTROL 12 WITH O-RING	10	64		
6	AW105	1000214	BACKWASH CONTROL 13 WITH O-RING	10	64		
6	AW106	1000215	BACKWASH CONTROL 14 WITH O-RING	10	64		
7	AW139	1030502	FLOW CONTROL BALL	10	64		
8	AW110	1034261	BRINE REFILL CONTROL 10 Lbs	10	64		
8	AW111	1034263	BRINE REFILL CONTROL 19 Lbs	10	64		
9	AW130	1032970	INJECTOR A WHITE WITH O-RING	10	64		
9	AW131	1032971	INJECTOR B BLUE WITH O-RING	10	64		
9	AW132	1032972	INJECTOR C RED WITH O-RING	10	64		
10	AW107	1000269	INJECTOR CAP/BACKWASH OPEN 00	10	64		

255-440i/460i/460TC VALVE EXPLODED VIEW & PARTS LIST

Number	Ref	P.N.	Description	Fam.	Subfam.		
11	AW170	1033784	ADAPTER PRESSURE VESSEL 2.1/2″ FOR TUBE 1.05″	10	64		
12	AW190	1032417	KIT AIR-CHECK 1/4″ MALE	10	64		
13	AW186	3029969	NUT 3/4″ - 1″	10	64		
14	AW169	3030918	O-RING 1.05″	10	64		
15	AW173	1031405	LOCKING BAR	10	64		
16	AW174	3030450	TOP PLATE SCREW NO 8x9/16″	10	64		
17	AW163	1235341	SPRING ONE PIECE 255 VALVE P/N 1235341	10	64		
Not shown	AW181	1001580	VALVE DISC SPRING	10	64		
19	AW146A	3019873	CAMSHAFT BEARING FOR COVER Lid NEW STYLE	10	64		
Not shown	AW191	1033066	NEW TO OLD AIR CHECK ADAPTER	10	64		
20	AW195	1001404	O-RING SET FOR 255 VALVE TOP/BOTTOM COUPLING	10	64		
21	AW196	1040459	O-RING SET*	10	64		
Not shown	AW197		O-RING SET W/SCREWS AND NUTS*	10	64		
22	AW171	1001986	13/16 RUBBER INSERT	10	64		
23	AW160A	3019871	NEW STYLE SERIES 400 TOP PLATE FOR VALVE 255	10	64		
24	AW180	1000250	VALVE DISCS KIT FOR 255	10	64		
25	AW140	1030528	AIR-CHECK BALL	10	64		
Not shown	AV037	1239760	BLENDING KIT SCREW FOR 700 SERIES AND 255/400 NEWSTYLE	10	62		
Not shown	AV059	1239753	TOP PLATE SWITCH KIT 253-5/263-8 0,1A	10	62		
Not shown	AV069	1239754	TOP PLATE SWITCH KIT 253-5/263-8 5A	10	62		

VALVE LOGIX 255 PARTS LIST

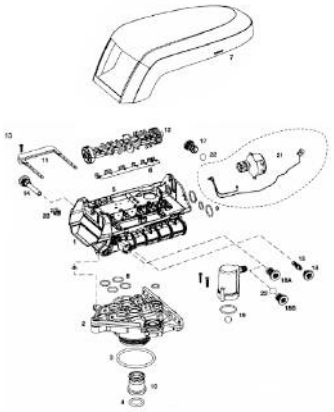

Number	Ref	P.N.	Description	Fam.	Subfam.		
1+5+6	AW168	1244650	255/700 VALVE ASSEMBLY W/O FLOW CONTROLS	10	64		
2	AW170	1033784	ADAPTER PRESSURE VESSEL 2.1/2″ FOR TUBE 1.05″	10	64		
3	AW172	3029969	O-RING ADAPTER FOR PRESSURE VESSEL 2.1/2″	10	64		
4	AW169	3030918	O-RING 1.05″	10	64		
5	AW162	1235340	TOP PLATE 253/255 LOGIX P/N 1235341	10	64		
6	AW163	1235341	SPRING ONE PIECE 255 VALVE P/N 1235341	10	64		
7	AW148	1236246	253-5/263-8 LOGIX STANDARD COVER P/N 1236246	10	64		
Not shown	AW145	1242234	255 LOGIX SLIM COVER	10	64		
8	AW195	1001404	O-RING SET FOR 255 VALVE TOP/BOTTOM COUPLING	10	64		
9	AW196	1040459	O-RING SET*	10	64		
10	AW171	1001986	13/16 RUBBER INSERT	10	64		
Not shown	AW180	1000250	VALVE DISCS KIT FOR 255	10	64		
Not shown	AV037	1239760	BLENDING KIT SCREW FOR 700 SERIES AND 255/400 NEWSTYLE	10	62		
11	AW173	1031405	LOCKING BAR	10	64		
12	AW149	1235353	CAMSHAFT 253/255 LOGIX P/N 1235353	10	64		
13	AW174	3030450	TOP PLATE SCREW NO 8x9/16″	10	64		
14	AW125	1000226	SCREEN/CAP ASSEMBLY WITH O-RING	10	64		
15	AW133	1035730	INJECTOR E YELLOW WITH O-RING	10	64		
15	AW134	1035731	INJECTOR F PEACH WITH O-RING	10	64		
15	AW135	1035732	INJECTOR G TAN WITH O-RING	10	64		
15	AW136	1035733	INJECTOR H LIGHT PURPLE WITH O-RING	10	64		
15	AW137	1035734	INJECTOR J LIGHT BLUE WITH O-RING	10	64		
15	AW138	1035735	INJECTOR K PINK WITH O-RING	10	64		
15	AW348	1035736	INJECTOR L ORANGE WITH O-RING P/N 1035736	10	64		
15	AW349	1035737	INJECTOR M BROWN WITH O-RING P/N 1035737	10	64		
15	AW350	1035738	INJECTOR N GREEN WITH O-RING P/N 1035738	10	64		
15	AW351	1035739	INJECTOR Q PURPLE WITH O-RING P/N 1035739	10	64		
15	AW352	1035884	INJECTOR R GREY WITH O-RING P/N 1035884	10	64		

VALVE LOGIX 255 EXPLODED VIEW AND PARTS LIST

Number	Ref	P.N.	Description	Fam.	Subfam.		
16	AW107	1000269	INJECTOR CAP/BACKWASH OPEN 00	10	64		
17	AW100	1000209	BACKWASH CONTROL 07 WITH O-RING	10	64		
17	AW101	1000210	BACKWASH CONTROL 08 WITH O-RING	10	64		
17	AW102	1000211	BACKWASH CONTROL 09 WITH O-RING	10	64		
17	AW103	1000212	BACKWASH CONTROL 10 WITH O-RING	10	64		
17	AW104	1000213	BACKWASH CONTROL 12 WITH O-RING	10	64		
17	AW105	1000214	BACKWASH CONTROL 13 WITH O-RING	10	64		
17	AW106	1000215	BACKWASH CONTROL 14 WITH O-RING	10	64		
18B	AW118	1243511	BRINE REFILL CONTROL .33 GPM	10	64		
19	AW190	1032417	KIT AIR-CHECK 1/4″ MALE	10	64		
20	AW129	1235373	OPTIC SENSOR P/N 1235373	10	64		
21	AW126	1238861	MOTOR W/SPACER AND PINION AND CABLE SERIES 700 P/N 1238861	10	64		
22	AW139	1030502	FLOW CONTROL BALL	10	64		
Not shown	AW191	1033066	NEW TO OLD AIR CHECK ADAPTER	10	64		
Not shown	AW140	1030528	AIR-CHECK BALL	10	64		
Not shown	AW128	1035446	TURBINE CABLE 255-268-278/700	10	64		
Not shown	AX040	1244336	KIT CHLORINE GENERATOR 255/268 LOGIX	10	70		
Not shown	AW124	3029962	MOTOR LOCKING PIN P/N 3029962	10	64		
Not shown	AV057	1239711	FRONT MOUNT SWITCH KIT 253-5/263-8 0,1A	10	62		
Not shown	AV058	1239752	FRONT MOUNT SWITCH KIT 253-5/263-8 5A	10	62		
Not shown	AV059	1239753	TOP PLATE SWITCH KIT 253-5/263-8 0,1A	10	62		
Not shown	AV069	1239754	TOP PLATE SWITCH KIT 253-5/263-8 5A	10	62		
Not shown	AV036A	1256257	KIT REMOTE LOGIX CONTROL W/TERMINAL BLOCKS P/N 1256257	10	62		
Not shown	AV023	1242411	EXTENSION CORD Lg=50cm FOR CAB. P/N 1242411	10	62		
Not shown	AV023A	1239979	4 PIN CONNECTOR CABLE START 700 SERIES	10	62		
Not shown	AW500	1000814	EUROPEAN TRANFORMER 230/12V	10	64		
Not shown	AW501	1000813	BRITISH TRANFORMER	10	64		

SERIES 400 TIMER EXPLODED VIEW (440i-460i-460TC)

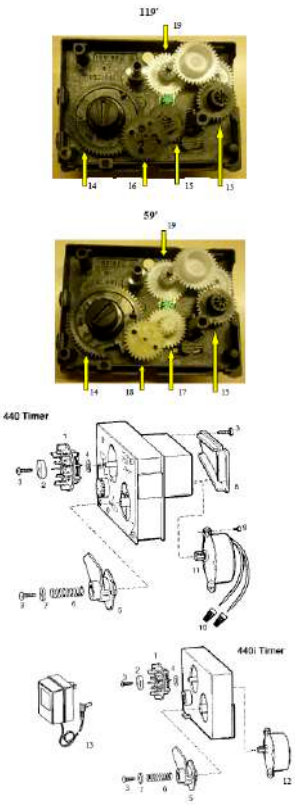

Number	Ref.	P.N.	Description	Fam.	Subfam.		
1	AW401	1031742	7 DAYS KIT DISCS FOR 440-440i	10	64		
5	AW402	1031756	TRIPPER ARM ASSEMBLY 440-440i	10	64		
11	AW421	3003134	MOTORE 24V.50 HZ PER 440-450	10	64		
12	AW423	1001568	12V-50HZ MOTOR FOR 440i	10	64		
12	AW433	1001569	12V-60HZ MOTOR FOR 440i	10	64		
12	AW424	1000098	9V-50HZ MOTOR FOR 460i-460tc	10	64		
13	AW500	1000814	EUROPEAN TRANFORMER 230/12V	10	64		
13	AW501	1000813	BRITISH TRANFORMER	10	64		
14	AW405	1001833	OUTPUT CONNECTOR W/BLACK START BUTTON 440i	10	64		
Not shown	AW406	1001000	BLACK START BUTTON 460i-460 tc	10	64		
Not shown	AW453	1005120	CABLE PRESS W/CABLE (440)	10	64		
15	AW454	1031554	BLACK GEAR 119´ A(INF.# 8)	10	64		
16	AW455	1030844	BLACK GEAR 119´ B	10	64		
17	AW456	1030842	WHITE GEAR 59´ A (INF.# 13)	10	64		
18	AW457	1030843	WHITE GEAR 59´ B	10	64		
19	AW449	1030841	WHITE GEAR FOR TIMER 440I P/N 1030841	10	64		

SERIES 400 TIMER LIST

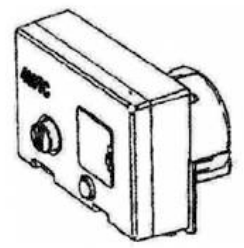

460tc

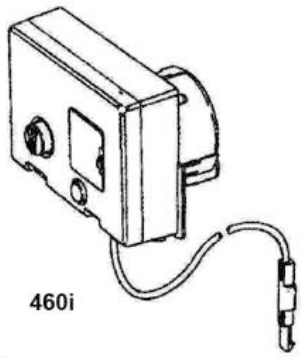

460i

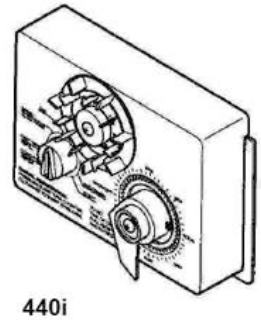

440i

Number	Ref	P.N.	Description	Fam.	Subfam.		
1	AW460	1051826	TIMER 440i 7DAYS 119´ 12V.50HZ ITA	10	64		
1	AW474	1051828	TIMER 440i 7DAYS 119´ 12V.50HZ E.	10	64		
2	AW482	4000610	TIMER 460tc 118´ 12V.50HZ SYM	10	64		
2	AW483	4000611	TIMER 460tc 59´ 12V.50HZ SYM	10	64		
2	AW480	1030007	TIMER 460i 118´ 12V.50HZ SYM	10	64		
2	AW481	1051811	TIMER 460i 59´ 12V.50HZ SYM	10	64		

SERIES 700 TIMER LIST

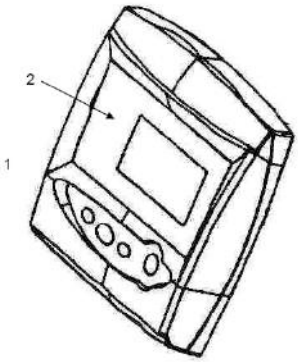

Number	Ref	P.N.	Description	Fam.	Subfam.		
1	AW511E		TIMER 740C W/CHECK SALT 12V 50/60HZ SYMBOL	10	64		
1	AW514E		TIMER 760C W/CHECK SALT 12V 50/60HZ SYMBOL	10	64		
1	AW517E		TIMER 740F W/CHECK SALT 12V 50/60HZ SYMBOL	10	64		
1	AW524E		TIMER 760F W/CHECK SALT 12V 50/60HZ SYMBOL	10	64		
1	AW512E		TIMER 742C W/CHECK SALT 12V 50/60HZ SYMBOL	10	64		
1	AW515E		TIMER 762C W/CHECK SALT 12V 50/60HZ SYMBOL	10	64		
1	AW518E		TIMER 742F W/CHECK SALT 12V 50/60HZ SYMBOL	10	64		
1	AW525E		TIMER 762F W/CHECK SALT 12V 50/60HZ SYMBOL	10	64		
1	AW505E		TIMER 764C W/CHECK SALT 12V 50/60HZ SYMBOL	10	64		
Not shown	AW504	1254886	SLAVE CONTROLLER P/N 1254886	10	64		

METER, MANIFOLD, 256 BYPASS SPARE PARTS

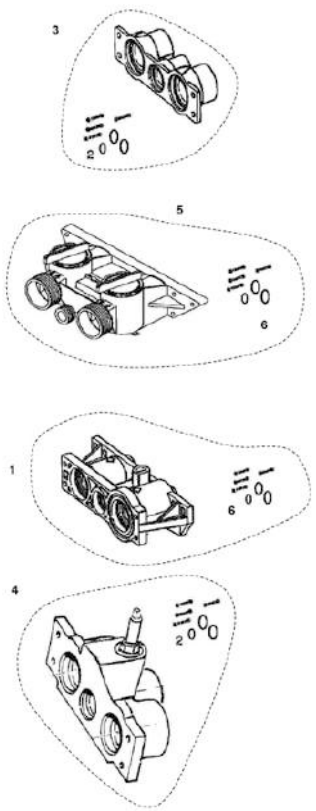

Number	Ref	P.N.	Description	Fam.	Subfam.		
1	AW201	1032350	METER ADAPTER KIT	10	64		
2	AW197		O-RING SET W/SCREWS AND NUTS*	10	64		
3	AV015		MANIFOLD BRASS FEMALE 3/4″ GAS	10	62		
3	AV016		MANIFOLD BRASS FEMALE 1″ GAS	10	62		
3	AV010		MANIFOLD KIT BRASS FEMALE 3/4″ GAS*	10	62		
3	AV011		MANFOLD KIT BRASS FEMALE 1″ GAS*	10	62		
Not shown	AV013	1040283	MANIFOLD KIT NORYL FEMALE 3/4″ BSPT*	10	62		
4	AV006		MANIFOLD 3/4″ GAS MIXER	10	62		
4	AV017		MANIFOLD BRASS FEMALE 1″ GAS MIXER	10	62		
Not shown	AV007		MANIFOLD KIT 3/4″ GAS BRASS MIXER*	10	62		
Not shown	AV012		MANIFOLD KIT BRASS FEMALE 1″ GAS MIXER*	10	62		
Not shown	AV001		MANIFOLD 3/4″ MALE WITH TURBINE P/N 1234260	10	62		
Not shown	AV001A		MANIFOLD 255 3/4″ BSP MALE NORYL + KIT P/N 123425	10	62		
Not shown	AV022		MANIFOLD 1″ MALE WITH TURBINE + KIT P/N 1234259	10	62		
Not shown	AV022A		MANIFOLD 255 1″ BSP MALE NORYL + KIT P/N 1234255	10	62		
5	AV026	1040769	BY-PASS 256 W/O-RING, SCREWS,NUTS	10	62		
6	AW197N	1040524	O-RING DET W/SCREWS & NUTS FOR NORYL MANIFOLD P/N1040524	10	64		

263-268-268F A/400 VALVE EXPLODED VIEW

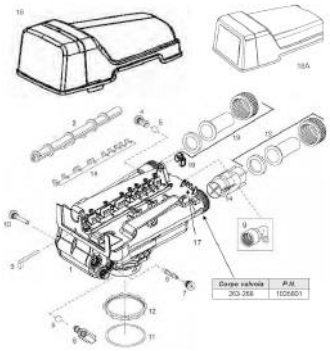

Number	Ref	P.N.	Description	Fam.	Subfam.		
4	AW100	1000209	BACKWASH CONTROL 07 WITH O-RING	10	64		
4	AW101	1000210	BACKWASH CONTROL 08 WITH O-RING	10	64		
4	AW102	1000211	BACKWASH CONTROL 09 WITH O-RING	10	64		
4	AW103	1000212	BACKWASH CONTROL 10 WITH O-RING	10	64		
4	AW104	1000213	BACKWASH CONTROL 12 WITH O-RING	10	64		
4	AW105	1000214	BACKWASH CONTROL 13 WITH O-RING	10	64		
4	AW106	1000215	BACKWASH CONTROL 14 WITH O-RING	10	64		
5	AW139	1030502	FLOW CONTROL BALL	10	64		
6	AW130	1032970	INJECTOR A WHITE WITH O-RING	10	64		
6	AW131	1032971	INJECTOR B BLUE WITH O-RING	10	64		
6	AW132	1032972	INJECTOR C RED WITH O-RING	10	64		
7	AW107	1000269	INJECTOR CAP/BACKWASH OPEN 00	10	64		
8	AW110	1034261	BRINE REFILL CONTROL 10 Lbs	10	64		
8	AW111	1034263	BRINE REFILL CONTROL 19 Lbs	10	64		
8	AW308	1030334	PLUGGED REFILL CONTROL 263	10	64		
9	AV175	1002449	ELBOW DRIAN FITTING 3/4″ F	10	62		

263-268-268F A/400 VALVE EXPLODED VIEW

Number	Ref	P.N.	Description	Fam.	Subfam.		
10	AW125	1000226	SCREEN/CAP ASSEMBLY WITH O-RING	10	64		
11	AW172	3029969	O-RING ADAPTER FOR PRESSURE VESSEL 2.1/2″	10	64		
12	AW319	1035622	TANK RING 2″1/2 263-268 P/N 1035622	10	64		
13	AV030B		MANIFOLD KIT BRASS MALE 3/4″ GAS*	10	62		
13	AV031B		MANIFOLD KIT BRASS MALE ″ GAS*	10	62		
13	AV032	1001615	MANIFOLD KIT PVC D,32	10	62		
13	AV038		MANIFOLD KIT BRASS MALE 1 1/4″ GAS*	10	62		
14	AW328	1033444	TURBINE ASSEMBLY	10	64		
15	AW360	1235339	VALVE DISC SPRING ONE PIECE 263/268 LOGIX P/N 1235339	10	64		
Not shown	AW181	1001580	VALVE DISC SPRING	10	64		
16	AW146A	3019873	CAMSHAFT BEARING FOR COVER Lid NEW STYLE	10	64		
18	AW141A	3019870	COVER FOR 255-263-268 SERIE 400 (I-Lid) NEW STYLE	10	64		
Not shown	AW329	1041174	VALVE DISCS KIT FOR 263-268-273-278	10	64		
Not shown	AW309	1035778	CAMSHAFT CLIP	10	64		
Not shown	AV037	1239760	BLENDING KIT SCREW FOR 700 SERIES AND 255/400 NEWSTYLE	10	62		
Not shown	AV065	1041116	MICRO-SWITCH KIT FOR 268 0.1 A	10	62		
Not shown	AV039		BY-PASS 1265 KIT BRASS 1″ GAS*	10	62		
Not shown	AV040		BY-PASS KIT 1265 BRASS 1 1/4″ GAS*	10	62		
Not shown	AW174	3030450	TOP PLATE SCREW NO 8x9/16″	10	64		

LOGIX 263-268-278 VALVE EXPLODED VIEW

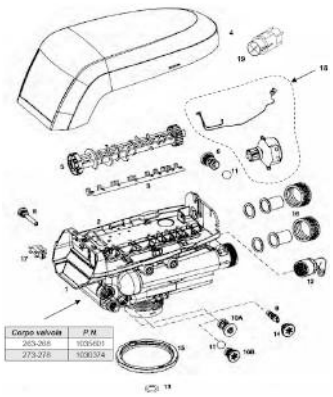

Number	Ref	P.N.	Description	Fam.	Subfam.		
1+2+3+13	AW362	1255104	263-268/700 VALVE ASSEMBLY W/O FLOW CONTROLS	10	64		
1+2+3+13	AW363	1255105	278 VALVE ASSMBLY W/O FLOW CONTROLS	10	64		
3	AW360	1235339	VALVE DISC SPRING ONE PIECE 263/268 LOGIX P/N 1235339	10	64		
4	AW148	1236246	253-5/263-8 LOGIX STANDARD COVER P/N 1236246	10	64		
5	AW358	1235352	CAMSHAFT 263/268 LOGIX P/N 1235352	10	64		
5	AW361	1237405	CAMSHAFT 278 LOGIX P/N 1237405	10	64		
6	AW100	1000209	BACKWASH CONTROL 07 WITH O-RING	10	64		
6	AW101	1000210	BACKWASH CONTROL 08 WITH O-RING	10	64		
6	AW102	1000211	BACKWASH CONTROL 09 WITH O-RING	10	64		
6	AW103	1000212	BACKWASH CONTROL 10 WITH O-RING	10	64		
6	AW104	1000213	BACKWASH CONTROL 12 WITH O-RING	10	64		
6	AW105	1000214	BACKWASH CONTROL 13 WITH O-RING	10	64		
6	AW106	1000215	BACKWASH CONTROL 14 WITH O-RING	10	64		
6	AV044	1030355	EXTERNAL BACKWASH 05 GPM	10	62		
6	AV045	1030356	EXTERNAL BACKWASH 06 GPM	10	62		
6	AV046	1030357	EXTERNAL BACKWASH 07 GPM	10	62		
6	AV047	1030358	EXTERNAL BACKWASH 08 GPM	10	62		
6	AV048	1030359	EXTERNAL BACKWASH 09 GPM	10	62		

PARTS LIST VALVE LOGIX 263-268-278

Number	Ref	P.N.	Description	Fam.	Subfam.		
6	AV049	1030360	EXTERNAL BACKWASH 10 GPM	10	62		
6	AV141	1000406	EXTERNAL BACKWASH CONTROL 12 GPM	10	62		
6	AV142	1000407	EXTERNAL BACKWASH CONTROL 15 GPM	10	62		
6	AV144	1000409	EXTERNAL BACKWASH CONTROL 20 GPM	10	62		
8	AW125	1000226	SCREEN/CAP ASSEMBLY WITH O-RING	10	64		
9	AW133	1035730	INJECTOR E YELLOW WITH O-RING	10	64		
9	AW134	1035731	INJECTOR F PEACH WITH O-RING	10	64		
9	AW135	1035732	INJECTOR G TAN WITH O-RING	10	64		
9	AW136	1035733	INJECTOR H LIGHT PURPLE WITH O-RING	10	64		
9	AW137	1035734	INJECTOR J LIGHT BLUE WITH O-RING	10	64		
9	AW138	1035735	INJECTOR K PINK WITH O-RING	10	64		
9	AW348	1035736	INJECTOR L ORANGE WITH O-RING P/N 1035736	10	64		
9	AW349	1035737	INJECTOR M BROWN WITH O-RING P/N 1035737	10	64		
9	AW350	1035738	INJECTOR N GREEN WITH O-RING P/N 1035738	10	64		
9	AW351	1035739	INJECTOR Q PURPLE WITH O-RING P/N 1035739	10	64		
9	AW352	1035884	INJECTOR R GREY WITH O-RING P/N 1035884	10	64		
10B	AW118	1243511	BRINE REFILL CONTROL .33 GPM	10	64		
10B	AW327	1000519	BRINE REFILL CONTROL 1.3 GPM P/N 1000519	10	64		
11	AW139	1030502	FLOW CONTROL BALL	10	64		
11	AW308	1030334	PLUGGED REFILL CONTROL 263	10	64		
12	AV175	1002449	ELBOW DRIAN FITTING 3/4″ F	10	62		
13	AW169	3030918	O-RING 1.05″	10	64		
14	AW107	1000269	INJECTOR CAP/BACKWASH OPEN 00	10	64		

PARTS LIST VALVE LOGIX 263-268-278

Number	Ref	P.N.	Description	Fam.	Subfam.		
15	AW319	1035622	TANK RING 2″1/2 263-268 P/N 1035622	10	64		
16	AV030B		MANIFOLD KIT BRASS MALE 3/4″ GAS*	10	62		
16	AV031B		MANIFOLD KIT BRASS MALE ″ GAS*	10	62		
16	AV032	1001615	MANIFOLD KIT PVC D,32	10	62		
16	AV038		MANIFOLD KIT BRASS MALE 1 1/4″ GAS*	10	62		
17	AW129	1235373	OPTIC SENSOR P/N 1235373	10	64		
18	AW126	1238861	MOTOR W/SPACER AND PINION AND CABLE SERIES 700 P/N 1238861	10	64		
Not shown	AW172	3029969	O-RING ADAPTER FOR PRESSURE VESSEL 2.1/2″	10	64		
Not shown	AW329	1041174	VALVE DISCS KIT FOR 263-268-273-278	10	64		
Not shown	AV037	1239760	BLENDING KIT SCREW FOR 700 SERIES AND 255/400 NEWSTYLE	10	62		
Not shown	AW128	1235446	TURBINE CABLE 255-268-278/700	10	64		
19	AW328	1033444	TURBINE ASSEMBLY	10	64		
Not shown	AX040	1244336	KIT CHLORINE GENERATOR 255/268 LOGIX	10	70		
Not shown	AW124	3029962	MOTOR LOCKING PIN P/N 3029962	10	64		
Not shown	AV057	1239711	FRONT MOUNT SWITCH KIT 253-5/263-8 0,1A	10	62		
Not shown	AV058	1239752	FRONT MOUNT SWITCH KIT 253-5/263-8 5A	10	62		
Not shown	AV059	1239753	TOP PLATE SWITCH KIT 253-5/263-8 0,1A	10	62		
Not shown	AV069	1239754	TOP PLATE SWITCH KIT 253-5/263-8 5A	10	62		
Not shown	AV036A	1256257	KIT REMOTE LOGIX CONTROL W/TERMINAL BLOCKS P/N 1256257	10	62		
Not shown	AV023	1242411	EXTENSION CORD Lg=50cm FOR CAB. P/N 1242411	10	62		
Not shown	AV023A	1239979	4 PIN CONNECTOR CABLE START 700 SERIES	10	62		

255/764 VALVE EXPLODED VIEW & PARTS LIST

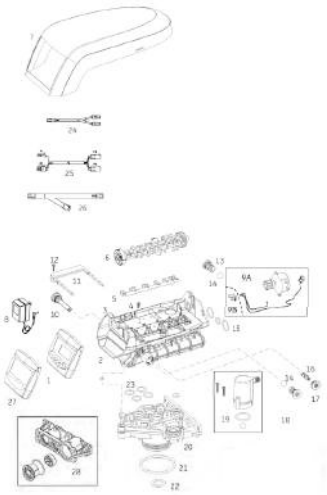

Number	Ref	P.N.	Description	Fam.	Subfam.		
1	AW505E		TIMER 764C W/CHECK SALT 12V 50/60HZ SYMBOL	10	64		
2+3+4+5	AW168	1244650	255/700 VALVE ASSEMBLY W/O FLOW CONTROLS	10	64		
3	AW162	1235340	TOP PLATE 253/255 LOGIX P/N 1235341	10	64		
4-12	AW174	3030450	TOP PLATE SCREW NO 8x9/16″	10	64		
5	AW163	1235341	SPRING ONE PIECE 255 VALVE P/N 1235341	10	64		
6	AW149	1235353	CAMSHAFT 253/255 LOGIX P/N 1235353	10	64		
6	AW177	1236251	CAMSHAFT 255 LOGIX 764 TWIN P/N 1236251	10	64		
7	AW148	1236246	253-5/263-8 LOGIX STANDARD COVER P/N 1236246	10	64		
8	AW500	1000814	EUROPEAN TRANFORMER 230/12V	10	64		
8	AW501	1000813	BRITISH TRANFORMER	10	64		
9A	AW126	1238861	MOTOR W/SPACER AND PINION AND CABLE SERIES 700 P/N 1238861	10	64		
9B	AW129	1235373	OPTIC SENSOR P/N 1235373	10	64		
10	AW125	1000226	SCREEN/CAP ASSEMBLY WITH O-RING	10	64		
11	AW173	1031405	LOCKING BAR	10	64		
13	AW100	1000209	BACKWASH CONTROL 07 WITH O-RING	10	64		
13	AW101	1000210	BACKWASH CONTROL 08 WITH O-RING	10	64		
13	AW102	1000211	BACKWASH CONTROL 09 WITH O-RING	10	64		
13	AW103	1000212	BACKWASH CONTROL 10 WITH O-RING	10	64		
13	AW104	1000213	BACKWASH CONTROL 12 WITH O-RING	10	64		
13	AW105	1000214	BACKWASH CONTROL 13 WITH O-RING	10	64		
13	AW106	1000215	BACKWASH CONTROL 14 WITH O-RING	10	64		
14	AW139	1030502	FLOW CONTROL BALL	10	64		
15	AW196	1040459	O-RING SET*	10	64		

PARTS LIST VALVE 255/764

Number	Ref	P.N.	Description	Fam.	Subfam.		
16	AW133	1035730	INJECTOR E YELLOW WITH O-RING	10	64		
16	AW134	1035731	INJECTOR F PEACH WITH O-RING	10	64		
16	AW135	1035732	INJECTOR G TAN WITH O-RING	10	64		
16	AW136	1035733	INJECTOR H LIGHT PURPLE WITH O-RING	10	64		
16	AW137	1035734	INJECTOR J LIGHT BLUE WITH O-RING	10	64		
16	AW138	1035735	INJECTOR K PINK WITH O-RING	10	64		
16	AW348	1035736	INJECTOR L ORANGE WITH O-RING P/N 1035736	10	64		
16	AW349	1035737	INJECTOR M BROWN WITH O-RING P/N 1035737	10	64		
16	AW350	1035738	INJECTOR N GREEN WITH O-RING P/N 1035738	10	64		
16	AW351	1035739	INJECTOR Q PURPLE WITH O-RING P/N 1035739	10	64		
16	AW352	1035884	INJECTOR R GREY WITH O-RING P/N 1035884	10	64		
17	AW107	1000269	INJECTOR CAP/BACKWASH OPEN 00	10	64		
18	AW118	1243511	BRINE REFILL CONTROL .33 GPM	10	64		
19	AW190	1032417	KIT AIR-CHECK 1/4″ MALE	10	64		
20	AW170	1033784	ADAPTER PRESSURE VESSEL 2.1/2″ FOR TUBE 1.05″	10	64		
21	AW172	3029969	O-RING ADAPTER FOR PRESSURE VESSEL 2.1/2″	10	64		
22	AW169	3030918	O-RING 1.05″	10	64		
23	AW195	1001404	O-RING SET FOR 255 VALVE TOP/BOTTOM COUPLING	10	64		
24	AW365	3016715	Y CABLE 4 PIN TURBINE SENSOR P/N 3016715	10	64		
25	AW366	3016775	INTERCONNECTION CABLE LOGIX TWIN LG 3 M P/N 3016775	10	64		
26	AW367	3020228	START/LOCKOUT CABLE 3 PIN MULTI TANK P/N 3020228	10	64		
27	AW504	1254886	SLAVE CONTROLLER P/N 1254886	10	64		
28	AW201	1032350	METER ADAPTER KIT	10	64		
Not shown	AW124	3029962	MOTOR LOCKING PIN P/N 3029962	10	64		
Not shown	AW128	1235446	TURBINE CABLE 255-268-278/700	10	64		

PARTS LIST VALVE 278/764

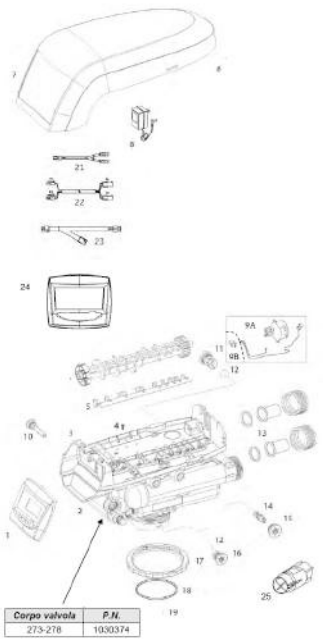

Number	Ref	P.N.	Description	Fam.	Subfam.		
1	AW505E		TIMER 764C W/CHECK SALT 12V 50/60HZ SYMBOL	10	64		
2+3+4+5+19	AW363	1255105	278 VALVE ASSMBLY W/O FLOW CONTROLS	10	64		
4	AW174	3030450	TOP PLATE SCREW NO 8x9/16″	10	64		
5	AW360	1235339	VALVE DISC SPRING ONE PIECE 263/268 LOGIX P/N 1235339	10	64		
6	AW361	1237405	CAMSHAFT 278 LOGIX P/N 1237405	10	64		
6	AW364	1237406	CAMSHAFT 278 LOGIX 764 TWIN P/N 1237406	10	64		
7	AW148	1236246	253-5/263-8 LOGIX STANDARD COVER P/N 1236246	10	64		
8	AW500	1000813	EUROPEAN TRANFORMER 230/12V	10	64		
8	AW501	1000811	BRITISH TRANFORMER	10	64		
9A	AW126	1238861	MOTOR W/SPACER AND PINION AND CABLE SERIES 700 P/N 1238861	10	64		
9B	AW129	1235373	OPTIC SENSOR P/N 1235373	10	64		
10	AW125	1000226	SCREEN/CAP ASSEMBLY WITH O-RING	10	64		
11	AW100	1000209	BACKWASH CONTROL 07 WITH O-RING	10	64		
11	AW101	1000211	BACKWASH CONTROL 08 WITH O-RING	10	64		
11	AW103	1000212	BACKWASH CONTROL 10 WITH O-RING	10	64		
11	AW104	1000213	BACKWASH CONTROL 12 WITH O-RING	10	64		
11	AW105	1000214	BACKWASH CONTROL 13 WITH O-RING	10	64		
11	AW106	1000215	BACKWASH CONTROL 14 WITH O-RING	10	64		
12	AW139	1030502	FLOW CONTROL BALL	10	64		
13	AV031B		MANIFOLD KIT BRASS MALE ″ GAS*	10	62		
13	AV032	1001615	MANIFOLD KIT PVC D,32	10	62		
13	AV038		MANIFOLD KIT BRASS MALE 1 1/4″ GAS*	10	62		
13	AW183		MANIFOLD+NUT 1,1/4″ BRASS	10	64		

PARTS LIST VALVE 278/764

Number	Ref	P.N.	Description	Fam.	Subfam.		
14	AW133	1035730	INJECTOR E YELLOW WITH O-RING	10	64		
14	AW134	1035731	INJECTOR F PEACH WITH O-RING	10	64		
14	AW135	1035732	INJECTOR G TAN WITH O-RING	10	64		
14	AW136	1035733	INJECTOR H LIGHT PURPLE WITH O-RING	10	64		
14	AW137	1035734	INJECTOR J LIGHT BLUE WITH O-RING	10	64		
14	AW138	1035735	INJECTOR K PINK WITH O-RING	10	64		
14	AW348	1035736	INJECTOR L ORANGE WITH O-RING P/N 1035736	10	64		
14	AW349	1035737	INJECTOR M BROWN WITH O-RING P/N 1035737	10	64		
14	AW350	1035738	INJECTOR N GREEN WITH O-RING P/N 1035738	10	64		
14	AW351	1035739	INJECTOR Q PURPLE WITH O-RING P/N 1035739	10	64		
14	AW352	1035884	INJECTOR R GREY WITH O-RING P/N 1035884	10	64		
15	AW107	1000269	INJECTOR CAP/BACKWASH OPEN 00	10	64		
16	AW118	1243511	BRINE REFILL CONTROL .33 GPM	10	64		
16	AW327	1000519	BRINE REFILL CONTROL 1.3 GPM P/N 1000519	10	64		
17	AW319	1035622	TANK RING 2″1/2 263-268 P/N 1035622	10	64		
18	AW172	3029969	O-RING ADAPTER FOR PRESSURE VESSEL 2.1/2″	10	64		
19	AW169	3030918	O-RING 1.05″	10	64		
21	AW365	3016715	Y CABLE 4 PIN TURBINE SENSOR P/N 3016715	10	64		
22	AW366	3016775	INTERCONNECTION CABLE LOGIX TWIN LG 3 M P/N 3016775	10	64		
23	AW367	3020228	START/LOCKOUT CABLE 3 PIN MULTI TANK P/N 3020228	10	64		
24	AW504	1254886	SLAVE CONTROLLER P/N 1254886	10	64		
Not shown	AW124	3029962	MOTOR LOCKING PIN P/N 3029962	10	64		
Not shown	AW128	1235446	TURBINE CABLE 255-268-278/700	10	64		
25	AW328	1033444	TURBINE ASSEMBLY	10	64		

MAGNUM VALVE 700 SERIES EXPLODED VIEW

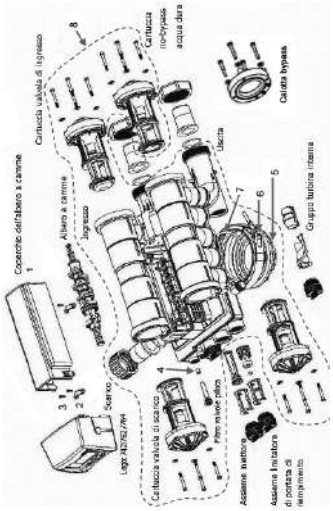

Number	Ref	P.N.	Description	Fam.	Subfam.		
1	CD140	1000343	CAMSHAFT COVER	20	83		
2	CD100	1000589	PILLOW BLOCK CAP	20	83		
3	CD109	3030505	MAGNUM VALVE LONG SCREW	20	83		
4	CD144	3025780	INTERNAL CHECK VALVE	20	83		
6	CD173	3024785	CLAMP AISI 304 P/N 3024785	20	83		
7	CD174	3026486	O RING CLAMP P/N 3026486	20	83		

MAGNUM VALVE 700 SERIES SPARE PARTS

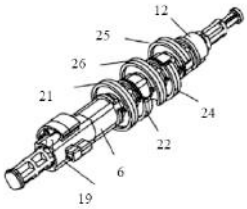

A) ALBERO A CAMME 5 CICLI ADDOLCITORE/FILTRO LOGIX

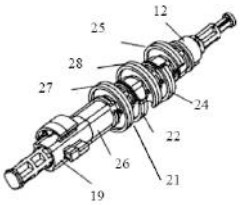

B) ALBERO A CAMME TWIN LOGIX

Number	Ref	P.N.	Description	Fam.	Subfam.		
A)	CD125	1267726	3-5 CYCLES MAGNUM LOGIX SIMPLEX CAMSHAFT	20	83		
consisting of							
19		1000499	Brine Cam - TAN				
6		1000462	Standard Cam - BLACK				
21		1001620	Pilot Cam # 1 - TAN				
22		1001621	Pilot Cam # 2 - BLU				
26		1267724	Pilot Cam # 3 - GREY				
24		1001623	Pilot Cam # 4 - YELLOW				
25		1001624	Pilot Cam # 5 - ORANGE				
12		1000469	Pilot Cam # 6 - RED				

Number	Ref	P.N.	Description	Fam.	Subfam.		
B)	CD126	1001751	3-5 CYCLES MAGNUM LOGIX TWIN CAMSHAFT P/N 1001751	20	83		
consisting of							
19		1000499	Brine Cam - TAN				
26		1034356	Spacer Cam - BLACK				
27		1233554	Standard Cam - TAN				
21		1001620	Pilot Cam # 1 - TAN				
22		1001621	Pilot Cam # 2 - BLU				
28		1001622	Pilot Cam # 3 - GREEN				
24		1001623	Pilot Cam # 4 - YELLOW				
25		1001624	Pilot Cam # 5 - ORANGE				
12		1000469	Pilot Cam # 6 - RED				

MAGNUM VALVE 700 SERIES SPARE PARTS

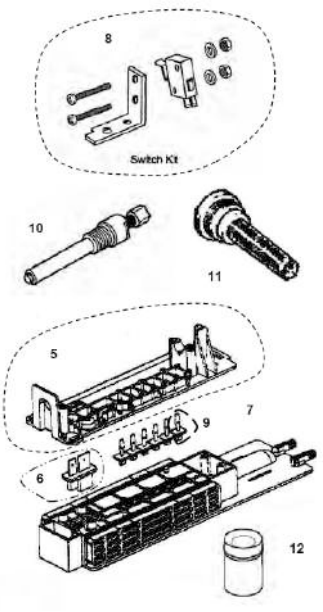

Number	Ref	P.N.	Description	Fam.	Subfam.		
5	CD141	1000339	MAGNUM PLATE P/N 1000339	20	83		
Not shown	AW174	3030450	TOP PLATE SCREW NO 8x9/16″	10	64		
Not shown	CD109	3030505	MAGNUM VALVE LONG SCREW	20	83		
6	CD143	1000391	BRINE FLAPFOR VALVE P/N 1000391	20	83		
9	CD142	1000328	PILOT FLAPPER VALVE P/N 1000328	20	83		
Not shown	AW181	1001580	VALVE DISC SPRING	10	64		
6+7	CD020	1040692	VALVE DISCS KIT FOR MAGNUM	20	83		
Not shown	CD161	1010162	4″ TANK ADAPTER O-RING	20	83		
8	CC119	3019468	KIT N.1 MICRO SWITCH 0.1 AMPERE P/N 3109468	20	82		
8	CC120	3019469	KIT N. 1 MICRO SWITCH 5.0 AMPERE P/N 3019469	20	82		
Not shown	CC124	3019467	KIT N. 3 MICRO SWITCH 5,0 AMPERE P/N 3019467	20	82		
10	CC130	1040668	EXTERNAL PILOT FEED ADAPTER	20	82		
11	AW125	1000226	SCREEN/CAP ASSEMBLY WITH O-RING	10	64		
12	CD144	3025780	INTERNAL CHECK VALVE	20	83		

MAGNUM VALVE INSTALLATION ADAPTER PARTS

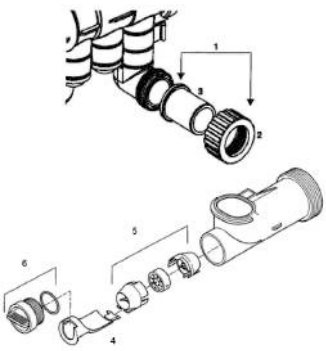

Number	Ref	P.N.	Description	Fam.	Subfam.		
1	CC080	3023673	MAGNUM 1,5″ STAINLESS STEEL ADAPTER KIT BSPT	20	82		
1	CC081	1001656	MAGNUM 1.5″ PVC D.50 MM ADAPTER KIT	20	82		
1	CC082	3023674	MAGNUM 2″ STAINLESS STEEL ADAPTER KIT BSPT	20	82		
1	CC083	1040785	MAGNUM 2″ PVC D.63 MM ADAPTER KIT	20	82		
2	CD151	1000356	1.5″ NORYL ADAPTER NUT	20	83		
2	CD152	1030664	2″ SS ADAPTER NUT	20	83		
3	CD153	3014556	1.5″ SS BSPT ADAPTER	20	83		
3	CD163		1.5″ BSPT FEMALE ADAPTER AVP GALVANIZED	20	83		
3	CD164		1.1/4″ BSPT FEMALE ADAPTER AVP GALVANIZED	20	83		
3	CD154	3014559	2″ SS BSPT ADAPTER	20	83		
4	CD067	1000074	INSERT CORNER 2″	20	83		
5	CD068	1232965	ASSEMBLY TURBINE IT 2″ P/N 1232965	20	83		
6	CD099	1040688	PLUG FOR INJECTOR, REFILL AND PRESSURE REGULATORPORTS	20	83		
Not shown	CD158	3029966	1.5″ ADAPTER & 48.3 MM TUBE O-RING	20	83		
Not shown	CD159	3029964	2″ ADAPTER O-RING	20	83		
Not shown	CD161	1010162	4″ TANK ADAPTER O-RING	20	83		
Not shown	CD162	1030891	GASKET FOR 2″ TURBINE	20	83		
Not shown	CC084	1040921	SIDE MOUNT ADAPTER PVC 2″ BSPT FEMALE	20	82		
Not shown	CD069	1033358	2″ FLOW METER BODY	20	83		
Not shown	CD073	1034081	2″ FLOW METER W/ 63 MM METRIC CPVC ADAPTER	20	83		

MAGNUM REFILL CONTROL ASSEMBLY PARTS

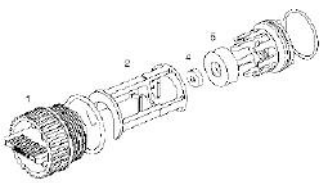

Number	Ref	P.N.	Description	Fam.	Subfam.		
1	CD099	1040688	PLUG FOR INJECTOR, REFILL AND PRESSURE REGULATORPORTS	20	83		
3	CD089	1040687	REFILL CONTROL ASSEMBLY W/O REFILL CONTROL	20	83		
4	CD081	1000421	BRINE REFIL CONTROLLER 0.7 GPM FOR PRESSURE VESSEL 14″	20	83		
4	CD082	1000422	BRINE REFIL CONTROLLER 0.8 GPM FOR PRESSURE VESSEL 16″	20	83		
4	CD083	1000423	BRINE REFIL COMTROLLES 1.0 GPM FOR PRESSURE VESSEL 18″	20	83		
4	CD084	1000424	BRINE REFIL CONTROLLER 1.4 GPM FOR PRESSURE VESSEL 21″	20	83		
4	CD085	1000425	BRINE REFIL CONTROLLER 2.0 GPM FOR PRESSURE VESSEL 24″	20	83		
4	CD086	1000426	BRINE REFIL CONTROLLER 3.0 GPM FOR PRESSURE VESSEL 30″	20	83		
4	CD087	1000427	BRINE REFIL CONTROLLER 5.0 GPM FOR PRESSURE VESSEL 36″	20	83		
5	CD080	1000479	REFILL CONTROL CAGE	20	83		

MAGNUM INJECTOR ASSEMBLY PARTS

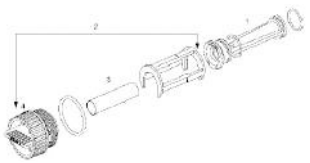

Number	Ref	P.N.	Description	Fam.	Subfam.		
1	CD091	1040670	INJECTOR 0.5 GPM FOR PRESSURE VESSEL 14″	20	83		
1	CD092	1040671	INJECTOR 0.5 GPM FOR PRESSURE VESSEL 16″	20	83		
1	CD093	1040672	INJECTOR 0.6 GPM FOR PRESSURE VESSEL 18″	20	83		
1	CD094	1040673	INJECTOR 0.9 GPM FOR PRESSURE VESSEL 21″	20	83		
1	CD095	1040674	INJECTOR 1.4 GPM FOR PRESSURE VESSEL 24″	20	83		
1	CD096	1040675	INJECTOR 2.0 GPM FOR PRESSURE VESSEL 30″	20	83		
1	CD097	1040676	INJECTOR 3.3 GPM FOR PRESSURE VESSEL 36″	20	83		
1	CD097A	1000491	INJECTOR 4.2 GPM FOR PRESSURE VESSEL 42″	20	83		
1	CD098	1040669	BLANK INJECTOR	20	83		
2	CD088	1040677	INJECTOR ASSEMBLY W/O INJECTOR	20	83		
3	CD090	1000322	INJECTOR SCREEN P/N 1000332	20	83		
4	CD099	1040688	PLUG FOR INJECTOR, REFILL AND PRESSURE REGULATORPORTS	20	83		

MAGNUM DRAIN LINE FLOW CONTROL PART LIST

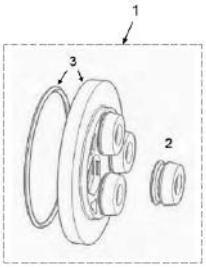

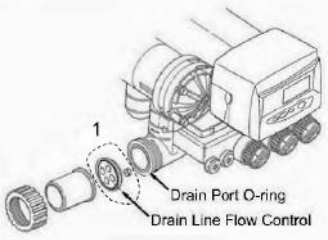

Number	Ref	P.N.	Description	Fam.	Subfam.		
1	CC101	1040720	FLOW CONTROL DISK 05 GPM	20	82		
1	CC102	1040721	FLOW CONTROL DISK 06 GPM	20	82		
1	CC103	1040723	FLOW CONTROL DISK 08 GPM	20	82		
1	CC104	1040725	FLOW CONTROL DISK 10 GPM	20	82		
1	CC105	1040728	FLOW CONTROL DISK 13 GPM	20	82		
1	CC114	1040729	FLOW CONTROL DISK 14 GPM	20	82		
1	CC106	1040740	FLOW CONTROL DISK 15 GPM	20	82		
1	CC107	1040745	FLOW CONTROL DISK 20 GPM	20	82		
1	CC108	1040747	FLOW CONTROL DISK 22 GPM	20	82		
1	CC110	1040735	FLOW CONTROL DISK 30 GPM	20	82		
1	CC111	1040750	FLOW CONTROL DISK 35 GPM	20	82		
1	CC112	1040755	FLOW CONTROL DISK 40 GPM	20	82		
1	CD101	1040756	FLOW CONTROL INSERT 05 GPM BLUE	20	83		
2	CD102	1040757	FLOW CONTROL INSERT 06 GPM RED	20	83		
2	CD103	1040758	FLOW CONTROL INSERT 07 GPM LIGHT BROWN	20	83		
2	CD104	1040759	FLOW CONTROL INSERT 08 GPM GREEN	20	83		
2	CD105	1040760	FLOW CONTROL INSERT 09 GPM LIGHT BROWNED	20	83		
2	CD106	1040761	FLOW CONTROL INSERT 10 GPM BRICK RED	20	83		
2	CD107	1040763	BLANK FLOW CONTROL INSERT BLACK	20	83		
2	CD180		DLFC INSERTS KIT*	20	83		
3	CD108	1040762	FLOW CONTROL DISC WITH O-RING	20	83		

MAGNUM CARTRIDGES PARTS LIST

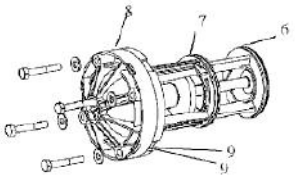

2 - Rinse Valve Cartridge

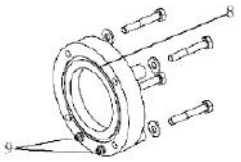

4 - Hard Water Bypass Cap

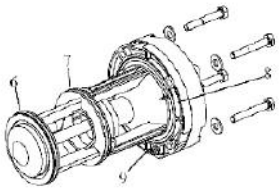

5 - Inlet Valve Cartridge

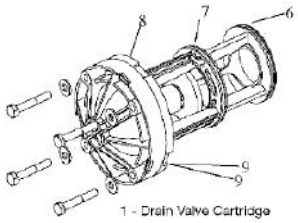

1 - Drain Valve Cartridge

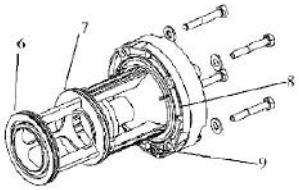

3 - No Hard Water Bypass Valve Cartridge

Number	Ref	P.N.	Description	Fam.	Subfam.		
1-3	CD111	1000366	DRAIN VALVE/NO HARD WATER BYPASS VALVE CARTRIDGE	20	83		
2	CD112	1000365	RINSE VALVE CARTRIDGE	20	83		
4	CD114	1000336	HARD WATER BYPASS CAP	20	83		
5	CD113	1000317	INLET VALVE CARTRIDGE	20	83		
6	CD118	1010157	O RING # 6 P/N 1010157	20	83		
7	CD119	1010158	O RING # 7 P/N 1010158	20	83		
8	CD120	3030497	O RING # 8 P/N 3030497	20	83		
9	CD124	1010116	O RING # 9 P/N 3030531	20	83		
Not shown	CD116	1040690	O-RING KIT FOR HARD WATER BYPASS CAP P/N 1040690	20	83		
Not shown	CD115	1040689	O-RING KIT P/N 1040689	20	83		

SERIES MAGNUM 700 TIMER LIST

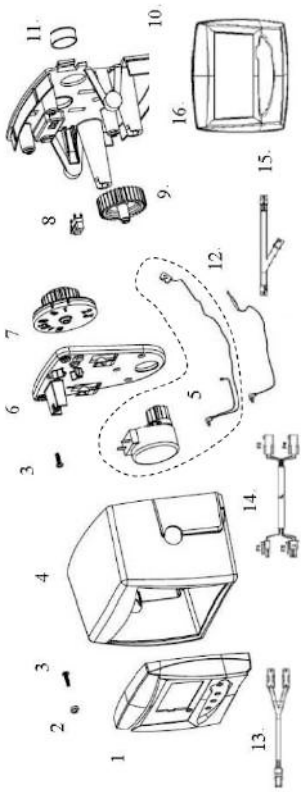

Number	Ref	P.N.	Description	Fam.	Subfam.		
1	AW512E		TIMER 742C W/CHECK SALT 12V 50/60HZ SYMBOL	10	64		
1	AW515E		TIMER 762C W/CHECK SALT 12V 50/60HZ SYMBOL	10	64		
1	AW518E		TIMER 742F W/CHECK SALT 12V 50/60HZ SYMBOL	10	64		
1	AW525E		TIMER 762F W/CHECK SALT 12V 50/60HZ SYMBOL	10	64		
1	AW505E		TIMER 764C W/CHECK SALT 12V 50/60HZ SYMBOL	10	64		
2	CD135	3030921	BUSHING LOGIX MOUNT	20	83		
3	CD136	3030001	NUT P/N 3030001	20	83		
5	AW126	1238861	MOTOR W/SPACER AND PINION AND CABLE SERIES 700 P/N 1238861	10	64		
7	CD139	1262581	DRIVE GEAR LOGIX MAGNUM CONTROL	20	83		
8	AW129	1235373	OPTIC SENSOR P/N 1235373	10	64		
9	CD128	1262672	IDLE GEAR LOGIX MAGNUM CONTROL	20	83		
12	CD131	1266722	TURBINE CABLE LOGIX LG=0.8 M	20	83		
12	CD132	1266723	TURBINE CABLE LOGIX LG=3 M	20	83		
13	AW365	3016715	Y CABLE 4 PIN TURBINE SENSOR P/N 3016715	10	64		
14	AW366	3016775	INTERCONNECTION CABLE LOGIX TWIN LG 3 M P/N 3016775	10	64		
15	AW367	3020228	START/LOCKOUT CABLE 3 PIN MULTI TANK P/N 3020228	10	64		
16	AW504	1254886	SLAVE CONTROLLER P/N 1254886	10	64		
Not shown	AW500	1000814	EUROPEAN TRANFORMER 230/12V	10	64		
Not shown	AW501	1000813	BRITISH TRANFORMER	10	64		
Not shown	AV036A	1256257	KIT REMOTE LOGIX CONTROL W/TERMINAL BLOCKS P/N 1256257	10	62		
Not shown	AV023A	1239979	4 PIN CONNECTOR CABLE START 700 SERIES	10	62		

PARTS LIST VALVE 255 D.I.

Number	Ref	P.N.	Description	Fam.	Subfam.		
Not shown	AW030	1030933	BACWASH BALL 155 DEMI	10	64		
Not shown	AW040	1033441	CAP 255 DI P/N 1033442	10	64		
Not shown	AW041	1034117	INJECTOR A 255 DI P/N 1034117	10	64		
Not shown	AW042	1034118	INJECTOR B 255 DI P/N 1034118	10	64		
Not shown	AW043	1034119	INJECTOR C 255 DI P/N 1034119	10	64		
Not shown	AW044	1033437	BACKWASH 08 255DI P/N 1033437	10	64		
Not shown	AW045	1033438	BACKWASH 09 255 DI P/N 1033438	10	64		
Not shown	AW046	1033439	BACKWASH 10 255DI P/N 1033439	10	64		
Not shown	AW047	1033440	BACKWASH 12 255DI P/N 1033440	10	64		
Not shown	AW048	1034110	CHECK VALVE 255 DI	10	64		
Not shown	AW049EP	1034185	EPDM O-RING SET FOR 255 DI VALVE TOP/BOTTOM COUPLING*	10	64		
Not shown	AW050EP	1033268	KIT OR EPDM 255 DI*	10	64		

PARTS LIST VALVE 155

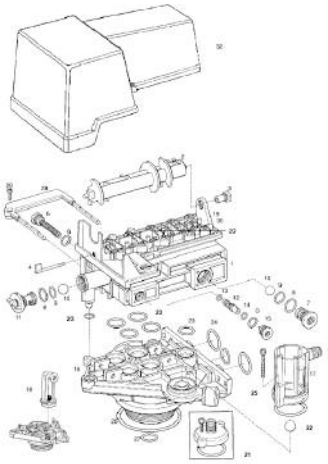

Number	Ref	P.N.	Description	Fam.	Subfam.		
3	AW146A	1030501	CAMSHAFT BEARING FOR COVER Lid NEW STYLE	10	64		
7	AW014	1000208	BACKWASH CONTROL 06 WITH O-RING	10	64		
7	AW100	1000209	BACKWASH CONTROL 07 WITH O-RING	10	64		
7	AW101	1000210	BACKWASH CONTROL 08 WITH O-RING	10	64		
7	AW102	1000211	BACKWASH CONTROL 09 WITH O-RING	10	64		
7	AW103	1000212	BACKWASH CONTROL 10 WITH O-RING	10	64		
7	AW104	1000213	BACKWASH CONTROL 12 WITH O-RING	10	64		
7	AW105	1000214	BACKWASH CONTROL 13 WITH O-RING	10	64		
10	AW139	1030502	FLOW CONTROL BALL	10	64		
11	AW110	1034261	BRINE REFILL CONTROL 10 Lbs	10	64		
11	AW111	1034263	BRINE REFILL CONTROL 19 Lbs	10	64		
12	AW130	1032970	INJECTOR A WHITE WITH O-RING	10	64		
12	AW131	1032971	INJECTOR B BLUE WITH O-RING	10	64		
12	AW132	1032972	INJECTOR C RED WITH O-RING	10	64		
16	AW170	1033784	ADAPTER PRESSURE VESSEL 2.1/2″ FOR TUBE 1.05″	10	64		
17	AW190	1032417	KIT AIR-CHECK 1/4″ MALE	10	64		
20	AW025	1033013	VALVE DISCS KIT FOR 155-163-168	10	64		
21	AW191	1033066	NEW TO OLD AIR CHECK ADAPTER	10	64		
22	AW140	1030528	AIR-CHECK BALL	10	64		
23	AW195	1001404	O-RING SET FOR 255 VALVE TOP/BOTTOM COUPLING	10	64		
24	AW196	1040459	O-RING SET*	10	64		
25	AW175		INOX SCREW 8-32 UNC LG. 75mm	10	64		
Not shown	AW197		O-RING SET W/SCREWS AND NUTS*	10	64		
26	AW172	3029969	O-RING ADAPTER FOR PRESSURE VESSEL 2.1/2″	10	64		
27	AW169	3030918	O-RING 1.05″	10	64		
28	AW173	1031405	LOCKING BAR	10	64		
29	AW174	3030450	TOP PLATE SCREW NO 8x9/16″	10	64		
30	AW181	1001580	VALVE DISC SPRING	10	64		

Autotrol Valves Series 255 Accessories

Bypass Kits 256: with gaskets, brass adapters, screws and nuts.

Ref	Description	Fam.	Subfam.		
AV028	BY-PASS 256 KIT BRASS 3/4″ GAS*	10	62		
AV029	BY-PASS 256 KIT BRASS 1″ GAS*	10	62		

Ref	Description	Connections in/out	Drain line
AV028	BY-PASS 256 KIT BRASS 3/4″ GAS*	¾”	½”
AV029	BY-PASS 256 KIT BRASS 1″ GAS*	1”	½”

Box: WxLxH	Box: Q.ty	Box: Weight	Pallet: WxLxH	Pallet: Q.ty	Pallet: Weight

Female mainfold kits: with o-rings, screws and nuts.

Ref	Description	Fam.	Subfam.		
AV013	MANIFOLD KIT NORYL FEMALE 3/4″ BSPT*	10	62		
AV010	MANIFOLD KIT BRASS FEMALE 3/4″ GAS*	10	62		
AV011	MANFOLD KIT BRASS FEMALE 1″ GAS*	10	62		

Ref	Description	Connections In/Out	Drain line	Material
AV013	MANIFOLD KIT NORYL FEMALE 3/4″ BSPT*	¾"	½"	Noryl
AV010	MANIFOLD KIT BRASS FEMALE 3/4″ GAS*	¾"	⅜"	Brass
AV011	MANFOLD KIT BRASS FEMALE 1″ GAS*	1"	½"	Brass

Box: WxLxH	Box: Q.ty	Box: Weight	Pallet: WxLxH	Pallet: Q.ty	Pallet: Weight

Female mixing mainfold kits : with o-rings, screws and nuts.

Ref	Description	Fam.	Subfam.		
AV007	MANIFOLD KIT 3/4″ GAS BRASS MIXER*	10	62		
AV012	MANIFOLD KIT BRASS FEMALE 1″ GAS MIXER*	10	62		

Ref	Description	Connections in/out	Drain line	Material
AV007	MANIFOLD KIT 3/4″ GAS BRASS MIXER*	¾	⅜	Brass
AV012	MANIFOLD KIT BRASS FEMALE 1″ GAS MIXER*	1"	½	Brass

Box: WxLxH	Box: Q.ty	Box: Weight	Pallet: WxLxH	Pallet: Q.ty	Pallet: Weight

Autotrol Valves Series 255 Accessories

Male mainfold kits

- in plastic material Noryl;
- with o-rings, screws and nuts.

Ref	Description	Fam.	Subfam.		
AV001	MANIFOLD 3/4″ MALE WITH TURBINE P/N 1234260	10	62		
AV001A	MANIFOLD 255 3/4″ BSP MALE NORYL + KIT P/N 123425	10	62		
AV022	MANIFOLD 1″ MALE WITH TURBINE + KIT P/N 1234259	10	62		
AV022A	MANIFOLD 255 1″ BSP MALE NORYL + KIT P/N 1234255	10	62		

Ref	Description	Connections in/out	Drain line	Option
AV001	MANIFOLD 3/4″ MALE WITH TURBINE P/N 1234260	¾	¾	With turbine
AV001A	MANIFOLD 255 3/4″ BSP MALE NORYL + KIT P/N 123425	¾	¾	Without turbine
AV022	MANIFOLD 1″ MALE WITH TURBINE + KIT P/N 1234259	1"	½	With turbine
AV022A	MANIFOLD 255 1″ BSP MALE NORYL + KIT P/N 1234255	1"	½	Without turbine

Box: WxLxH	Box: Q.ty	Box: Weight	Pallet: WxLxH	Pallet: Q.ty	Pallet: Weight

Slim cover for valve 255 Logix

- in plastic material.

Ref	Description	Fam.	Subfam.		
AW145	255 LOGIX SLIM COVER	10	10		

Box: WxLxH	Box: Q.ty	Box: Weight	Pallet: WxLxH	Pallet: Q.ty	Pallet: Weight

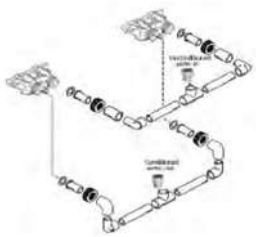

D. 32 interconnection kit for 255/764twin residential duplex systems

- special manifold for AUTOTROL 255 valves included;
- for twin alternating and twin parallel systems

Ref	Description	Fam.	Subfam.		
AV119	INTERCONNECTION KIT 255/764 TWIN D.32 X 1″ FEMALE*	10	62		

Quantity	Description
2	Adapter PVC-U D = 32 mm - 1”
2	Tee connection T PVC-U D = 32 mm
4	Elbow PVC-U D = 32 mm D1 = 25 mm
4	Tube PVC-U D = 32 mm
2	Elbow D = 32 mm
2	Coupling sleeve D = 32 mm
2	Manifold kit with adapter D. 32 to glue
2	256 by-pass with o-rings, screws and nuts

Box: WxLxH	Box: Q.ty	Box: Weight	Pallet: WxLxH	Pallet: Q.ty	Pallet: Weight

Autotrol Valves Series 263 – 268 – 278 Accessories

1265 bypass Kits

- special manifold for AUTOTROL valves series 263, 268 and 278;
- with gaskets, brass adapters and nuts.

Ref	Description	Fam.	Subfam.		
AV039	BY-PASS 1265 KIT BRASS 1″ GAS*	10	62		
AV040	BY-PASS KIT 1265 BRASS 1 1/4″ GAS*	10	62		

Ref	Description	Connections in/out
AV039	BY-PASS 1265 KIT BRASS 1″ GAS*	1"
AV040	BY-PASS KIT 1265 BRASS 1 1/4″ GAS*	1 ¼ "

Box: WxLxH	Box: Q.ty	Box: Weight	Pallet: WxLxH	Pallet: Q.ty	Pallet: Weight

Manifold Kits

- special manifold for AUTOTROL valves series 263, 268 and 278;
- with 2 gaskets, 2 adapters and 2 nuts.

Ref	Description	Fam.	Subfam.		
AV030B	MANIFOLD KIT BRASS MALE 3/4″ GAS*	10	62		
AV031B	MANIFOLD KIT BRASS MALE ″ GAS*	10	62		
AV032	MANIFOLD KIT PVC D,32	10	62		
AV038	MANIFOLD KIT BRASS MALE 1 1/4″ GAS*	10	62		

Ref	Description	Raccordi in/out
AV030B	MANIFOLD KIT BRASS MALE 3/4″ GAS*	¾
AV031B	MANIFOLD KIT BRASS MALE ″ GAS*	1"
AV032	MANIFOLD KIT PVC D,32	D.32
AV038	MANIFOLD KIT BRASS MALE 1 1/4″ GAS*	1¼"

Box: WxLxH	Box: Q.ty	Box: Weight	Pallet: WxLxH	Pallet: Q.ty	Pallet: Weight

Autotrol Valves Series 278 Accessories

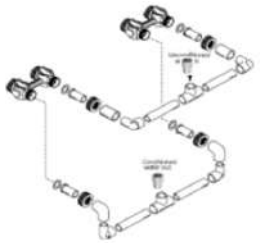

Kit di intercollegamento D. 32 per sistemi duplex residenziali 278/764 twin

- special manifold for AUTOTROL 278 valves included;
- for twin alternating and twin parallel systems;
- with IN/OUT connection D.32;

Ref	Description	Fam.	Subfam.		
AV128	INTERCONNECTION KIT 278/764 TWIN D.32 X 1″ FEMALE*	10	62		

Quantity	Description
2	Adapter PVC-U D = 32 mm - 1”
2	Tee connection T PVC-U D = 32 mm
4	Elbow PVC-U D = 32 mm D1 = 25 mm
4	Tube PVC-U D = 32 mm
2	Elbow D = 32 mm
2	Coupling sleeve D = 32 mm
2	Manifold kit with adapter D. 32 to glue
2	1265 by-pass with o-rings, screws and nuts

Box: WxLxH	Box: Q.ty	Box: Weight	Pallet: WxLxH	Pallet: Q.ty	Pallet: Weight

D.40 interconnection kit for 278/764twin residential duplex systems

- special manifold for AUTOTROL 278 valves included;
- for twin alternating and twin parallel systems;
- with IN/OUT connection D.40;

Ref	Description	Fam.	Subfam.		
AV129	INTERCONNECTION KIT 278/764 TWIN D.40 X 1″ 1/4 FEMALE *	10	62		

Quantity	Description
2	Adapter PVC-U D = 40 mm – 1 ¼”
2	Tee connection T PVC-U D = 40 mm
4	Reducing socket PVC-U D = 40 mm D2 = 32 mm
4	Elbow PVC-U D = 32 mm D1 = 25 mm
4	Tube PVC-U D = 32 mm
2	Elbow D = 32 mm
2	Coupling sleeve D = 32 mm
2	Manifold kit with adapter D. 32 to glue
2	1265 by-pass with o-rings, screws and nuts

Box: WxLxH	Box: Q.ty	Box: Weight	Pallet: WxLxH	Pallet: Q.ty	Pallet: Weight

Autotrol Valves Magnum Accessories

Magnum side mounting adapters

- in PVC material

Ref	Description	Fam.	Subfam.		
CC084	SIDE MOUNT ADAPTER PVC 2″ BSPT FEMALE	20	82		
CC084A	MAGNUM SIDE MOUNT ADAPTER PVC D.63 MALE TO GLUE	20	82		

Box: WxLxH	Box: Q.ty	Box: Weight	Pallet: WxLxH	Pallet: Q.ty	Pallet: Weight

Manifold kits

- with 3 nuts, 3 gaskets and 3 adapters.

Ref	Description	Fam.	Subfam.		
CC080	MAGNUM 1,5″ STAINLESS STEEL ADAPTER KIT BSPT	20	82		
CC081	MAGNUM 2″ PVC D.50 MM ADAPTER KIT	20	82		
CC082	MAGNUM 2″ STAINLESS STEEL ADAPTER KIT BSPT	20	82		
CC083	MAGNUM 2″ PVC D.63 MM ADAPTER KIT	20	82		

Ref	Description	in/out Connection	For autotrol valve
CC080	MAGNUM 1,5″ STAINLESS STEEL ADAPTER KIT BSPT	1½"BSPT	Magnum cv 1,5” series
CC081	MAGNUM 2″ PVC D.50 MM ADAPTER KIT	D.50	Magnum cv 1,5” series
CC082	MAGNUM 2″ STAINLESS STEEL ADAPTER KIT BSPT	2” BSPT	Magnum it 2” series
CC083	MAGNUM 2″ PVC D.63 MM ADAPTER KIT	D.63	Magnum it 2” series

Box: WxLxH	Box: Q.ty	Box: Weight	Pallet: WxLxH	Pallet: Q.ty	Pallet: Weight

Autotrol Valves Magnum Accessories

D.25 NPT ¾" Pipe Union

- Suitable for brine line connection of the Magnum valves, alone or in coupling with a bonding hose connection (REF. CC086);
- In PVC-U.

Ref	Description	Fam.	Subfam.		
CC085	UNION D.25 NPT 3/4″ PVC-U	20	82		

Box: WxLxH	Box: Q.ty	Box: Weight	Pallet: WxLxH	Pallet: Q.ty	Pallet: Weight

D.25 Drain Fitting to glue

- Suitable for brine line connection of the Magnum valves, in coupling with D.25 NPT ¾" pipe union (REF. CC085);
- In PVC-U.

Ref	Description	Fam.	Subfam.		
CC086	HOSE CONNECTION D.25 PVC-U TO GLUE	20	82		

Box: WxLxH	Box: Q.ty	Box: Weight	Pallet: WxLxH	Pallet: Q.ty	Pallet: Weight

¾" - ¾" F Elbow Fitting

- Suitable for the Brine Valve CC059 or for air check CC064M;
- In PVC-U.

Ref	Description	Fam.	Subfam.		
CC066	ELBOW PVC-U 3/4″ F TO GLUE - 3/4″ F THREADED	20	82		

Box: WxLxH	Box: Q.ty	Box: Weight	Pallet: WxLxH	Pallet: Q.ty	Pallet: Weight

Valves Accessories

Blending kit for Autotrol valves

- kit of nut and screw to install on 255 and 268 valves for blending of hard and softened water;
- insert the nut into the blending valve orifice located near the bypass flapper. Insert the screw through the top plate and the nut, and the screw until it touch the bypass flapper ;
- tightening the screw will force the bypass flapper open witch will blend hard water into the softened water supply. Loosening the screw will allow the bypass flapper to close reducing the blending;
- test the water and adjust the screw until the desired hardness level is reached.

Ref	Description	Fam.	Subfam.		
AV037	BLENDING KIT SCREW FOR 700 SERIES AND 255/400 NEWSTYLE	10	62		
AV185	MIXING VALVE FOR 366-368 VALVE	10	62		

Box: WxLxH	Box: Q.ty	Box: Weight	Pallet: WxLxH	Pallet: Q.ty	Pallet: Weight

Valves Accessories

Twist lock upper screens

- in ABS;
- max diameter 60 mm, length 64 mm;
- slots 0,3 mm.

Ref	Description	Fam.	Subfam.		
AV070	UPPER SCREEN 13/16″ BAJONET (FOR 255 VALVE)	10	62		
AV071	UPPER SCREEN 1.05″ BAJONETALVES)	10	62		

Box: WxLxH	Box: Q.ty	Box: Weight	Pallet: WxLxH	Pallet: Q.ty	Pallet: Weight

Certificates	Manufacturer	Sectors
DM174-2004		Domestic

Upper screen

- in ABS;
- max diameter 60 mm, length 64 mm;
- slots 0,3 mm.

Ref	Description	Fam.	Subfam.		
AV073	UPPER SCREEN 1.05″ (FOR 163,168 VALVES)	10	62		

Box: WxLxH	Box: Q.ty	Box: Weight	Pallet: WxLxH	Pallet: Q.ty	Pallet: Weight

Certificates	Manufacturer	Sectors
DM174-2004		Domestic

Upper screens to glue

- in ABS;
- diameter 88 mm;
- slots 0,3 mm.

Ref	Description	Fam.	Subfam.		
CC050	UPPER SCREEN D=48,3 MM	20	82		
PV407	UPPER SCREEN FOR 4″ ADAPTER 1.1/4″ TUBE	50	241		

Ref	Lenght (mm)	For tube (mm)	For autotrol valve
CC050	150	48,3	Magnum
PV407	150	41,8 (1¼ ")	Adapter 4"-PV402

Box: WxLxH	Box: Q.ty	Box: Weight	Pallet: WxLxH	Pallet: Q.ty	Pallet: Weight

Certificates	Manufacturer	Sectors
DM174-2004		Domestic, Commercial, Industrial

Valves Accessories

Fittings for valves

- Jaco Style elbow fittings for ⅜” tubing;
- material PP.

Ref	Description	Fam.	Subfam.		
AV150	ELBOW FITTING AIR-CHECK 1/4″ FEMALE NPT	10	62		
AV154	ELBOW FITTING 3/8″″ FEMALE NPT	10	62		

Ref	Description	For autotrol valve
AV150	ELBOW FITTING AIR-CHECK 1/4″ FEMALE NPT	255
AV154	ELBOW FITTING 3/8″″ FEMALE NPT	268-366-368

Certificates	Manufacturer	Sectors
		Domestic

Fittings for valves

- Jaco Style straight fittings for ⅜” tubing;
- material PP.

Ref	Description	Fam.	Subfam.		
AV152	STRAIGHT FITTING 1/4″ MALE NPT	10	62		
AV153	STRAIGHT FITTING 3/8″ MALE NPT	10	62		

Certificates	Manufacturer	Sectors
		Domestic

Fittings for valves

- Jaco Style elbow fittings for ⅜” tubing;
- material PP.

Ref	Description	Fam.	Subfam.		
AV151	ELBOW FITTING AIR-CHECK 1/4″ MALE NPT	10	62		
AV160	ELBOW FITTING 1/4″ FEMALE NPT JC 45-6-4 PO	10	62		
AV159	ELBOW FITTING 3/8″ MALE NPT	10	62		

Ref	Description	For Autotrol valve
AV151	ELBOW FITTING AIR-CHECK 1/4″ MALE NPT	155
AV160	ELBOW FITTING 1/4″ FEMALE NPT JC 45-6-4 PO	
AV159	ELBOW FITTING 3/8″ MALE NPT	

Certificates	Manufacturer	Sectors
		Domestic

Valves Accessories

Fittings for valves

- Jaco Style bulkhead union for ⅜” tubing;
- material PP.

Ref	Description	Fam.	Subfam.		
AV156	BULKHEAD UNION 3/8″ NPT	10	62		

Certificates	Manufacturer	Sectors
		Domestic

Fittings for valves

- Jaco Style union elbow for ⅜” tubing;
- material PP.

Ref	Description	Fam.	Subfam.		
AV155	ELBOW FITTING UNION 3/8″ NPT	10	62		

Certificates	Manufacturer	Sectors
		Domestic

Fittings for valves

- Jaco Style union TEE for ⅜” tubing;
- material PP.

Ref	Description	Fam.	Subfam.		
AV158	UNION TEE 3/8″ UNION NPT	10	62		

Certificates	Manufacturer	Sectors
		Domestic

Straight drain fittings

- suitable for flexible hose 12,7 mm internal diameter;
- material nylon.

Ref	Description	Fam.	Subfam.		
AV170	STRAIGHT DRAIN FITTING 3/8″ M	10	62		
AV171	STRAIGHT DRAIN FITTING 1/2″M	10	62		
AV169	STRAIGHT DRAIN FITTING 1/2″ FX16	10	62		

Certificates	Manufacturer	Sectors
		Domestic

Elbowed drain fittings

- suitable for flexible hose 12,7 mm internal diameter;
- material nylon / polyethylene.

Ref	Description	Fam.	Subfam.		
AV172	ELBOW DRAIN FITTING 3/8″ M	10	62		
AV173	ELBOW DRAIN FITTING 1/2″M	10	62		
AV174	ELBOW DRAIN FITTING 1/2″ F	10	62		
AV175	ELBOW DRIAN FITTING 3/4″ F	10	62		

Certificates	Manufacturer	Sectors
		Domestic

Overflow elbows with nut

- material nylon.

Ref	Description	Fam.	Subfam.		
AV180	OVERFLOW ELBOW 3/8″	10	62		
AV181	OVERFLOW ELBOW 1/2″	10	62		

Ref	Description	For hose int. ø (mm)
AV180	OVERFLOW ELBOW 3/8″	12,7
AV181	OVERFLOW ELBOW 1/2″	15,5

Certificates	Manufacturer	Sectors
		Domestic

Valves Accessories

Pvc tubes to glue

- for lower diffusors and lower lateral systems;
- to glue;
- in PVC.

Ref	Description	Fam.	Subfam.		
AV126	PVC TUBE 3/8″ OD (D OUT.=9,5MM - D IN.=7MM +0/-0,1) L=280MM	10	62		
AV083	PVC TUBE 13/16″ OD (D OUT.=20,6MM - D IN.=18MM +0/-0,3) L=889MM(35″)	10	62		
AV084	PVC TUBE 13/16″ OD (D OUT.=20,6MM - D IN.=18MM +0/-0,3) L=1397MM(55″)	10	62		
AV087	PVC TUBE 1.05″ OD (D OUT.=26,6MM - D IN.=23MM +0/-0,3) L=1829MM(72″)	10	62		
AV632	PVC TUBE D=32 MM (D OUT.=32MM - D IN.=28,4MM +0/-0,3) L=2000MM	22	940		
CF012	PVC TUBE D=41,8 MM (D OUT.=42MM - D IN.=36MM +0/-0,3) L=2000MM	20	87		
CC052	PVC TUBE D=48,3 MM (D OUT.=48,35MM - D IN.=42,3MM+0/-0,3) L=2000MM	20	82		
CF050	PVC TUBE D=50 MM (D OUT.=50MM - D IN.=43,96MM +0/-0,3) L=2000MM	22	970		
CF063	PVC TUBE D=63 MM (D OUT.=63MM - D IN.=56,96MM +0/-0,3) L=2000MM	22	970		

Certificates	Manufacturer	Sectors
DM174-2004		Domestic, Commercial, Industrial

Diffusors with tube

- 1,05” hi-flow lower diffusor;
- PVC tube included;
- slots 0,3 mm.

Ref	Description	Fam.	Subfam.		
AV116M	PVC TUBE 1.05″ OD L=432MM(17″) + LOWER DIFFUSER AV097*	10	62		
AV117M	PVC TUBE 1.05″ OD L=889MM(35″) + LOWER DIFFUSER AV097*	10	62		
AV103M	PVC TUBE 1.05″ OD L=1397MM(55″) + LOWER DIFFUSER AV097*	10	62		
AV104M	PVC TUBE 1.05″ OD L=1829MM(72″) + LOWER DIFFUSER AV097*	10	62		

Certificates	Manufacturer	Sectors
DM174-2004		Domestic

Lower diffusors to glue

- lower diffusors in ABS; max diameter 60 mm; slots 0,3 mm; connection to glue.

Ref	Description	Fam.	Subfam.		
AV098	LOWER DIFFUSER CONIC (FOR 13/16″ OD TUBE)	10	62		
AV098A	LOWER DIFFUSER CONIC (FOR 1.05″ OD TUBE)	10	62		
AV097	LOWER DIFFUSER (FOR 1.05″ OD TUBE)	10	62		

Ref	Height (mm)	Flow (lpm) Δp 30 mbar
AV098	70	24
AV098A	80	32
AV097	90 high flow	40

Certificates	Manufacturer	Sectors
DM174-2004		Domestic

Cylindrical lower diffusors

- cylindrical lower diffusor in ABS, diameter 88 mm; slots 0,3 mm; connection to glue.

Ref	Description	Fam.	Subfam.		
PV315	CYLINDRICAL LOWER DIFFUSER D. 1,05*	10	62		
CF011	CYLINDRICAL LOWER DIFFUSER L=98MM TO GLUE FOR TUBE D=41,8MM	20	87		
CF014	CYLINDRICAL LOWER DIFFUSER L=98MM TO GLUE FOR TUBE D=48,3MM	20	87		
CC051	CYLINDRICAL LOWER DIFFUSER L=150MM TO GLUE FOR TUBE D=48,3MM	20	82		
V-D1197-09	970 BOTTOM STACK DISTRIBUTOR 50 MM SOLVENT	25	850		

Item	Ref	Length. (mm)	Ø For tube (mm)	For Autotrol valve
1	PV315	72	26,7 (1,05")	PERFORMA
1	CF011	98	41,8 (1¼")	180 old model -PV402
1	CF014	98	48,3	180 new model
2	CC051	150	48,3	Magnum
2	V-D1197-09	150	50	-

Certificates	Manufacturer	Sectors
DM174-2004		Commercial, Industrial

Segmented lower diffusors

- segmented lower diffusor in ABS; diameter 66 mm;
- slots 0,3 mm; to glue on tube 1,05”; flow = 50 lpm Δp 30 mbar.

Ref	Description	Fam.	Subfam.		
AV099A	SEGMENTED LOWER DIFFUSER (FOR 1.05″ OD TUBE)	10	62		
AV099C	SEGMENTED LOWER DIFFUSER (FOR D.32 MM TUBE)	10	62		

Ref	Length. (mm)	Ø For tube (mm)
AV099A	102	26,7 (1,05")
AV099C	98,5	32

Certificates	Manufacturer	Sectors
DM174-2004		Domestic

Valves Accessories

Lower lateral systems for top mounted valves

- For top mounted valves;
- ABS material;
- With 8 laterals (threaded connection) slots 0,3 mm;
- Hub connection to glue.

Ref	Description	Fam.	Subfam.		
PV316	LOWER THREADED LATERAL DIFFUSER FOR 263-268-278 14″-16″	10	62		
PV317	LOWER THREADED LATERAL DIFFUSER FOR 263-268-278 18″-21″-24″	10	62		
PV31632	LOWER LATERAL DIFFUSER FOR TUBE D.32 MM 14″-16″	10	62		
PV31732	LOWER LATERAL DIFFUSER FOR TUBE D.32 MM 18″-21″-24″	10	62		
PV318	LOWER THREADED LATERAL DIFFUSER FOR PV402 ADAPTER14″-16″	20	87		
PV319	LOWER THREADED LATERAL DIFFUSER FOR PV402 ADAPTER18″-21″-24″	20	87		
PV320	LOWER THREADED LATERAL DIFFUSER FOR MAGNUM 14″-16	20	82		
PV321	LOWER THREADED LATERAL DIFFUSER FOR MAGNUM 18″-21″-24″	20	82		
PV322	LOWER THREADED LATERAL DIFFUSER FOR MAGNUM 30″	20	82		
PV323	LOWER THREADED LATERAL DIFFUSER FOR MAGNUM 36″	20	82		

Ref	Description	Ø Useful fo vessel (pollici)	Ø Hub connect for tube (mm)
PV316	LOWER THREADED LATERAL DIFFUSER FOR 263-268-278 14″-16″	14"-16"	26,7 (1,05")
PV317	LOWER THREADED LATERAL DIFFUSER FOR 263-268-278 18″-21″-24″	18"-21"-24"	26,7 (1,05")
PV31632	LOWER LATERAL DIFFUSER FOR TUBE D.32 MM 14″-16″	14"-16"	32
PV31732	LOWER LATERAL DIFFUSER FOR TUBE D.32 MM 18″-21″-24″	18"-21"-24"	32
PV318	LOWER THREADED LATERAL DIFFUSER FOR PV402 ADAPTER14″-16″	14"-16"	41,8 (1¼")
PV319	LOWER THREADED LATERAL DIFFUSER FOR PV402 ADAPTER18″-21″-24″	18"-21"-24"	41,8 (1¼")
PV320	LOWER THREADED LATERAL DIFFUSER FOR MAGNUM 14″-16	14"-16"	48,3 (1,90")
PV321	LOWER THREADED LATERAL DIFFUSER FOR MAGNUM 18″-21″-24″	18"-21"-24"	48,3 (1,90")
PV322	LOWER THREADED LATERAL DIFFUSER FOR MAGNUM 30″	30"	48,3 (1,90")
PV323	LOWER THREADED LATERAL DIFFUSER FOR MAGNUM 36″	36"	48,3 (1,90")

Box: WxLxH	Box: Q.ty	Box: Weight	Pallet: WxLxH	Pallet: Q.ty	Pallet: Weight

Certificates	Manufacturer	Sectors
		Commercial, Industrial

Lower lateral systems for top mounted valves

- For top mounted valves;
- ABS material;
- With 6 twist lock laterals, slots 0,25 mm;
- Hub connection to glue.

Ref	Description	Fam.	Subfam.		
PV316B	TWIST LOCK LOWER LATERAL DIFFUSER FOR 263-268-27814-16″	10	62		
PV317B	TWIST LOCK LOWER LATERAL DIFFUSER FOR 263-268-27818-21-24″	10	62		
PV318B	TWIST LOCK LOWER LATERAL DIFFUSER FOR PV102 14-16	10	62		
PV319B	TWIST LOCK LOWER LATERAL DIFFUSER FOR PV102 18-21-24″	10	62		
PV320B	TWIST LOCK LOWER LATERAL DIFFUSER FOR MAGNUM 14-16″	10	62		
PV321B	TWIST LOCK LOWER LATERAL DIFFUSER FOR MAGNUM 18-21-24″	10	62		
PV322B	TWIST LOCK LOWER LATERAL DIFFUSER FOR MAGNUM 30″	10	62		
PV323B	TWIST LOCK LOWER LATERAL DIFFUSER FOR MAGNUM 36″	10	62		
PV320B50	TWIST LOCK LOWER LATERAL DIFFUSER FOR D.50 TUBE 14-16″	10	62		
PV321B50	TWIST LOCK LOWER LATERAL DIFFUSER FOR D.50 TUBE 18-21-24″	10	62		
PV322B50	TWIST LOCK LOWER LATERAL DIFFUSER FOR D.50 TUBE 30″	10	82		
PV323B50	TWIST LOCK LOWER LATERAL DIFFUSER FOR D.50 TUBE 36″	10	82		

Ref	Ø Useful for vessels (inch)	Ø Hub connect for tube (mm)	Ø D (mm)	For Autotrol valve
PV316B	14"-16"	26,7 (1,05")	260	PERFORMA
PV317B	18"-21"-24"	26,7 (1,05")	373	PERFORMA
PV318B	14"-16"	41,8 (1¼")	260	PV402
PV319B	18"-21"-24"	41,8 (1¼")	373	PV402
PV320B	14"-16"	48,3 (1,90")	260	MAGNUM
PV321B	18"-21"-24"	48,3 (1,90")	373	MAGNUM
PV322B	30"	48,3 (1,90")	563	MAGNUM
PV323B	36"	48,3 (1,90")	705	MAGNUM
PV320B50	14"-16"	50 (2")	260	
PV321B50	18"-21"-24"	50 (2")	373	
PV322B50	30"	50 (2")	563	
PV323B50	36"	50 (2")	705	

Box: WxLxH	Box: Q.ty	Box: Weight	Pallet: WxLxH	Pallet: Q.ty	Pallet: Weight

Certificates	Manufacturer	Sectors
		Commercial, Industrial

Valves Accessories

Diffusor for brine draw

- connection for rigid or flexible tube ⅜”.

Ref	Description	Fam.	Subfam.		
AV118	DIFFUSER FOR BRINE TUBE 3/8″ OD	10	62		

Box: WxLxH	Box: Q.ty	Box: Weight	Pallet: WxLxH	Pallet: Q.ty	Pallet: Weight

Certificates	Manufacturer	Sectors
		Domestic

Mesh type screen with tube

- mesh type screen for brine complete with ⅜” PVC tube length 42”.

Ref	Description	Fam.	Subfam.		
AV090M	PVC TUBE 3/8″ OD L=1067MM(42″) + MESH TYPE SCREENAV075	10	62		

Box: WxLxH	Box: Q.ty	Box: Weight	Pallet: WxLxH	Pallet: Q.ty	Pallet: Weight

Certificates	Manufacturer	Sectors
		Domestic

Mesh type screen for brine

- For ⅜” tube to glue.

Ref	Description	Fam.	Subfam.		
AV075	MESH TYPE SCREEN FOR BRINE (FOR 3/8″ OD TUBE)	10	62		

Box: WxLxH	Box: Q.ty	Box: Weight	Pallet: WxLxH	Pallet: Q.ty	Pallet: Weight

Certificates	Manufacturer	Sectors
		Domestic

Valves Accessories

Polyethylene flexible tubes

- flexible tubes 1/4" or 3/8" (= 9,54 mm) diameter;
- availability of different colors;
- hanks of 100 m (only AV140 is 30 m).

Ref	Description	Fam.	Subfam.		
AV140	POLYETILENE 3/8″ CLEAR ROLL 30 MT	10	62		
DH252	POLYETILENE 3/8″ BLACK ROLL 100 MT	30	175		
DH253	POLYETILENE 3/8″ WHITE ROLL 100 MT	30	175		
DH254	POLYETILENE 3/8″ RED ROLL 100 MT	30	175		
DH255	POLYETILENE 3/8″ BLUE ROLL 100 MT	30	175		
DH231	POLYETILENE 1/4″ CLEAR ROLL 100 MT	30	175		
DH232	POLYETILENE 1/4″ BLACK ROLL 100 MT	30	175		
DH233	POLYETILENE 1/4″ WHITE ROLL 100 MT	30	175		
DH234	POLYETILENE 1/4″ RED ROLL 100 MT	30	175		
DH235	POLYETILENE 1/4″ BLUE ROLL 100 MT	30	175		

Box: WxLxH	Box: Q.ty	Box: Weight	Pallet: WxLxH	Pallet: Q.ty	Pallet: Weight

Certificates	Manufacturer	Sectors
DM174-2004		Domestic

J-tube air-check with tube

- J-tube with air-check, complete with PVC tube.

Ref	Description	Fam.	Subfam.		
AV093M	PVC TUBE 3/8″ OD L=1067MM(42″) + AIR-CHECK AV108*	10	62		
CC064M	PVC TUBE 3/4″ OD L=1200MM + AIR-CHECK CC063*	10	62		

Ref	Description	Tube diameter (inch)	Lenght (mm)
AV093M	PVC TUBE 3/8″ OD L=1067MM(42″) + AIR-CHECK AV108*	⅜"	1060
CC064M	PVC TUBE 3/4″ OD L=1200MM + AIR-CHECK CC063*	¾"	1200

Box: WxLxH	Box: Q.ty	Box: Weight	Pallet: WxLxH	Pallet: Q.ty	Pallet: Weight

Certificates	Manufacturer	Sectors
		Domestic, Commercial, Industrial

Brine Valves Accessories

Model 464

- model 464 Standard version (for no timed refill controls) and High Flow (for timed refill controls);
- connection for ⅜” tubing;
- length tube 42” (1060 mm);
- length float rod 600 mm;
- brine draw rate 3,8 l/min@ 152 mm Hg vacuum;
- max operating pressure 8,5 bar 40°C;
- brine well diameter 90 mm min.

Ref	Description	Fam.	Subfam.		
AV096	464 STANDARD BRINE VALVE KIT + PVC TUBE 3/8˝ OD L=1067MM(42˝)*	10	62		
AV125	464 HIGH FLOW BRINE VALVE KIT + PVC TUBE 3/8˝ ODL=1067MM(42˝)*	10	62		

Ref	Description	Refill flow rate (l/min) @ 3,5 bar
AV096	464 STANDARD BRINE VALVE KIT + PVC TUBE 3/8˝ OD L=1067MM(42˝)*	1,3
AV125	464 HIGH FLOW BRINE VALVE KIT + PVC TUBE 3/8˝ ODL=1067MM(42˝)*	3,8

Box: WxLxH	Box: Q.ty	Box: Weight	Pallet: WxLxH	Pallet: Q.ty	Pallet: Weight

Certificates	Manufacturer	Sectors
		Domestic

Model 484

- complete with ¾” tube length 1200 mm;
- length float rod 915 mm;
- refill flow rate 15 l/min @ 3,5 bar;
- brine draw rate 38 l/min @ 66 mm Hg vacuum;
- max operating pressure 8,5 bar @ 40°C;
- brine well diameter 130 mm.

Ref	Description	Fam.	Subfam.		
CC059	PVC TUBE 3/4˝ OD L=1200MM + 484 BRINE VALVE*	20	82		

Box: WxLxH	Box: Q.ty	Box: Weight	Pallet: WxLxH	Pallet: Q.ty	Pallet: Weight

Certificates	Manufacturer	Sectors
		Commercial, Industrial

Model 2310

- length float rod 774 mm;
- refill flow rate 4,5 l/min;
- brine draw rate 2,1 l/min;
- max operating pressure 8,6 bar @ 40°C;
- brine well diameter 100 mm;
- without air check.

Ref	Description	Fam.	Subfam.		
FVA060067-03	SBV 2310 - BRINE VALVE WITHOUT AIR CHECK	23	590		

Box: WxLxH	Box: Q.ty	Box: Weight	Pallet: WxLxH	Pallet: Q.ty	Pallet: Weight

Certificates	Manufacturer	Sectors

Heads for tank

- PVC heads for tank complete with NBR o-ring;
- max operating pressure 8 bar;
- max operating temperature 50°C;
- REF. PV400 and REF. PV401 are to use with upper screen REF. AV073 and with lower diffusors on catalogue;
- REF. PV402 is to use with upper screen REF. PV407 and with lower diffusor REF. CF011.

Ref	Description	Fam.	Subfam.		
PV400	ADAPTER 2.1/2″ IN/OUT 3/4″ GAS F W/PLUG	50	240		
PV401	ADAPTER 2.1/2″ IN/OUT 3/4″ GAS F	50	240		
PV402	ADAPTER 4″ IN/OUT 1.1/4″GAS F W/PLUG	50	240		

Ref	Option plug	Rise tube diameter	Max flow rate suggested	Fit threaded tanks
PV400	½"on outlet	1,05"	2,5 m3/h	2 ½"8NPSM
PV401	no plug	1,05	2,5 m3/h	2 ½"8NPSM
PV402	½"on outlet	1 ¼"	6,0 m3/h	4"-8UN

- PP molded heads for tank with connection threaded 2 ½” – 8NPSM;
- complete with NBR o-ring;
- without plug;
- max operating pressure 8 bar;
- max operating temperature 45°C; it is to use with upper screen REF. AV070 and with lower diffusor REF. AV098.

Ref	Description	Fam.	Subfam.		
PV409	ADAPTER 2 1/2″ MOULDED IN/OUT 3/4″ NPT	50	240		

Ref	Riser tube diameter	Max suggested flow rate
PV409	13/16"	2,5 m3/h

- ABS molded heads for tank with connection threaded 2 ½” – 8NPSM; -Complete with NBR o-ring;
- Max operating pressure 8 bar; - Max operating temperature 45°C;
- Riser tube 13/16"; - Optional adapter for 1,05" tube.

Ref	Description	Fam.	Subfam.		
PV415	3-WAY MANUAL VALVE	50	240		
PV416	PLUG 3/4″ WITH O-RING FOR PV415 3-WAY MANUAL VALV	50	240		
PV417	ADAPTER FOR PV415 3-WAY MANUAL VALVE	50	240		

Conductivity Meter Resilight

- positive, reliable and economical method of monitoring water quality via conductivity;
- bright green/red visual output easy to read:
- Green: conductivity below the threshold value;
- Red: conductivity above the threshold value;
- set point conductivity adjustable from 1,5 to 200 microsiemens;
- probe with threaded ⅜” connection, probe constant K=5;
- with reduction in PVC M/F ½” x ⅜”;
- complete with transformer 230/5V - 50 Hz and 1,5 m cable;
- for installation on piping at system outlet, or directly on the heads REF. PV400 and REF. PV402.
- ATTENTION: or greatest accuracy it is required that thewater be flowing on probe.

Ref	Description	Fam.	Subfam.		
PV425	MWG RESILIGHT 1.5 - 200 MICROSIEMENS/CM W/CONDUCTIVITY PROBE	50	242		

Box: WxLxH	Box: Q.ty	Box: Weight	Pallet: WxLxH	Pallet: Q.ty	Pallet: Weight

Certificates	Manufacturer	Sectors
CE	**MWG**	Industrial

Valves Accessories

Chlorgen Chlorin Generator

- Positive, reliable and economical method of chlorine generation;
- n.1 Titanium Probe for chlorine generation, n.1 TEE ⅜” connection and n.2 Jaco straight fitting for ⅜” x ⅜” tube included;
- bright green/yellow visual output easy to read:
- Green: the system is on;
- Yellow: the system is working in disinfection;
- with time generation adjust;
- 230V - 50 Hz power supply and 1,8 m cable;
- Power 2 W;
- The Chlorin Generator can disinfect up to 140 litres of resin.

Ref	Description	Fam.	Subfam.		
AX210	MWG CHLORGEN KIT W/PROBE AND FITTINGS	10	70		

Box: WxLxH	Box: Q.ty	Box: Weight	Pallet: WxLxH	Pallet: Q.ty	Pallet: Weight

Certificates	Manufacturer	Sectors
CE	**MWG**	Domestic

Chlorine generator suitable for valve 255 and Performa 268 with Logix 740/760 and 742/762 controller

- Simple, reliable and cheap disinfection device;
- Delivery includes n.1 electrode and n.1 connection cable;
- Logix 740/760 and 742/762 controllers provide to make a low chlorine level in order to sanitize resin bed during regeneration;
- Logix controller has a light check salt that indicates to end user when salt has to be added into brine tank;
- Potassium chloride or sodium chloride can be used.

Ref	Description	Fam.	Subfam.		
AX040	KIT CHLORINE GENERATOR 255/268 LOGIX	10	70		

Box: WxLxH	Box: Q.ty	Box: Weight	Pallet: WxLxH	Pallet: Q.ty	Pallet: Weight

Certificates	Manufacturer	Sectors
CE	Pentair	Domestic

Valves Accessories

Test kit for hardness

- Kit for hardness testing with indicator and titrant complete with test tube;
- definition 0,5 °F;
- number of tests 400°F;
- available No 6 blister of indicator 15 ml (REF. AV203) and No 6 blister of titrant 25 ml (REF. AV204).

Codici	Description	Fam.	Subfam.		
AV200	HARDNESS KIT TESTING INDICATOR + TITRANT	10	66		
AV203	6 BLISTERS PACK INDICATOR 15 ML	10	66		
AV204	6 BLISTERS PACK TITRANT 15 ML	10	66		
AV200P	MULTIPACK 10 PCS - 20 ML GRADUATE TEST TUBE	10	66		

Box: WxLxH	Box: Q.ty	Box: Weight	Pallet: WxLxH	Pallet: Q.ty	Pallet: Weight

Certificates	Manufacturer	Sectors
		Domestic

- Kit for hardness testing with single reagent packaged in blister, with test tube;
- available for definition with French (REF. AV202) or German (REF. AV207) degrees.

Ref	Description	Fam.	Subfam.		
AV202	HARDNESS KIT TESTING SINGLE REAGENT 2 BLISTER	10	66		
AV207	HARDNESS KIT TESTING SINGLE REAGENT 2 BLISTER GERMAN	10	66		

Ref	Description	Definition	Number of tests
AV202	HARDNESS KIT TESTING SINGLE REAGENT 2 BLISTER	1°F	700
AV207	HARDNESS KIT TESTING SINGLE REAGENT 2 BLISTER GERMAN	1°D	600

Box: WxLxH	Box: Q.ty	Box: Weight	Pallet: WxLxH	Pallet: Q.ty	Pallet: Weight

Certificates	Manufacturer	Sectors
		Domestic

- Kit for hardness testing with single reagent packaged in blister, with test tube;
- available for definition with French (REF. AV201) or German (REF. AV206) degrees.

Ref	Description	Fam.	Subfam.		
AV201	HARDNESS KIT TESTING SINGLE REAGENT 1 BLISTER	10	66		
AV206	HARDNESS KIT TESTING SINGLE REAGENT 1 BLISTER GERMAN	10	66		

Ref	Description	Definition	Number of tests
AV201	HARDNESS KIT TESTING SINGLE REAGENT 1 BLISTER	1°F	350
AV206	HARDNESS KIT TESTING SINGLE REAGENT 1 BLISTER GERMAN	1°D	300

Box: WxLxH	Box: Q.ty	Box: Weight	Pallet: WxLxH	Pallet: Q.ty	Pallet: Weight

Certificates	Manufacturer	Sectors
		Domestic

Valves Accessories

Total chlorine kit

- Color comparison kit for Chlorine reaction;
- Ideal for water with low content of organics, like drink water.

Ref	Description	Fam.	Subfam.		
AV205	CHLORINE TESTING KIT O-TOL 0,1-1,5 PPM P/N 1011	10	66		

Ref	Range (ppm Cl2)	Test quantity
AV205	0,10-0,25-0,50-0,75-1,0-2,0	75

Box: WxLxH	Box: Q.ty	Box: Weight	Pallet: WxLxH	Pallet: Q.ty	Pallet: Weight

Chlorine DPD kit

- Color comparison kit for Chlorine reaction;
- This kit measures the free chlorine and the total chlorine. The difference is given by the combined chlorine (for water with high total organic carbon);
- IPT kits are ideal for few analyzes with discrete precision.

Ref	Description	Fam.	Subfam.		
AV208	IPT DPD CHLORINE KIT	10	66		

Ref	Sample	Range (ppm Cl2)	Test quantity
AV208	5 ml	0,1-0,2-0,3-0,4-0,5-0,75-1,0-1,5	150

Box: WxLxH	Box: Q.ty	Box: Weight	Pallet: WxLxH	Pallet: Q.ty	Pallet: Weight

Valves Accessories

Iron kit

- Color comparison kit for Iron reaction;
- IPT kits are ideal for few analyzes with discrete precision. For higher precision, we suggest the HYDROCHECK HIGH.

Ref	Description	Fam.	Subfam.		
AV210	IPT IRON KIT	10	66		

Ref	Sample	Range (ppm Fe)	Test quantity
AV210	5 ml	0,25-0,50-1,0-2,0-5,0-7,5-10-15	100
AV210	20 ml	0,05-0,10-0,15-0,20	100

Box: WxLxH	Box: Q.ty	Box: Weight	Pallet: WxLxH	Pallet: Q.ty	Pallet: Weight

Certificates	Manufacturer	Sectors
		Domestic

Ph kit

- Color comparison kit for pH;
- IPT kits are ideal for few analyzes with discrete precision. For higher precision, we suggest pH meters.

Ref	Description	Fam.	Subfam.		
AV213	IPT PH 1-11 KIT	10	66		

Ref	Range (pH)	Test quantity
AV213	1-2-3-4-5-5,5-6-6,5-7-7,5-8-8,5-9-9,5-10-11	200

Box: WxLxH	Box: Q.ty	Box: Weight	Pallet: WxLxH	Pallet: Q.ty	Pallet: Weight

Certificates	Manufacturer	Sectors
		Domestic

Sulphate kit

- Color comparison kit for Sulphate by turbidimetric method.

Ref	Description	Fam.	Subfam.		
AV214	IPT SULPHATE KIT	10	66		

Ref	Range (p pm SO4)	Test quantity
AV214	50-75-100-150-200-250-300-350	70

Box: WxLxH	Box: Q.ty	Box: Weight	Pallet: WxLxH	Pallet: Q.ty	Pallet: Weight

Certificates	Manufacturer	Sectors
		Domestic

F65 Runxin Residential Down Flow Valves

- Electronic programmable valve, suitable for automatic and residential water softening systems;
- Valve body in NSF listed Noryl plastic material;
- Operating system based on two high design ceramic discs;
- Regeneration DF;
- Operating flow rate Kv = 1,08;
- Backwash flow rate Kv = 0,50;
- Resin volume range = 5 ÷ 40 liters;
- Available in chronometric or volumetric versions;
- With White Injector mounted (Pink, Yellow and Blue Injectors included), European transformer 12/230V – 50Hz, upper screen, n.1 Base Seal O-ring, n.1 Drain Hose Connector, n.1 Brine Tube Hose Connector, n.1 Tube Bushing and n.1 Brine Line Flow Control);
- Others injectors (6800 Series)and accessories not included, to order separately;
- If you use a by-pass, you must install a floating valve (our ref. RF09959).

Ref	Description	Fam.	Subfam.		
RF65B1	VALV. AUT. SOFT. F65B1 (63502) CHRON. 3/4″ DF	22	930		

Characteristics:	
Tank size	6” ÷ 10”
Connections In/Out	Threaded ¾” female (male optional included)
Pressure vessel connection	Threaded 2 ½” - 8 NPSM male
Drain line connection	Threaded ½” male
Brine line connection	Threaded ⅜” BSPT male
Distributor tube O. D. diameter	1,05” (= 27 mm)
Distributor tube length above pressure vessel	0 ± 2 mm
Weight (valve + controller)	1,66 kg
Operating pressure	1,5 ÷ 6,0 bar
Water Temperature	5°C ÷ 50°C

Box: WxLxH	Box: Q.ty	Box: Weight	Pallet: WxLxH	Pallet: Q.ty	Pallet: Weight

Certificates	Manufacturer	Sectors
DM174-2004 CE	Runxin	Domestic

Specific Accessories

Ref	Description	Fam.	Subfam.		
RF70B	BYPASS FOR F65 AND F69 VALVES - 41102	22	940		
RF70BL	BYPASS WITH TURBINE FOR F65 AND F69 VALVES - 41102L	22	940		
RF09959	FLOATING VALVE 35″	22	940		

Spare Parts

Ref	Description	Fam.	Subfam.		
RF09967	EUROPEAN POWER ADAPTER FOR RUNXIN RES. VALVE	22	940		
RFP9999	RUNXIN UPPER SCREEN 1.05″ BAJONET	22	940		

F79B-LCD Runxin Residential Volumetric Valve

- Electronic volumetric programmable valve multilanguage, suitable for automatic and residential water softening systems;
- Valve body in NSF listed Noryl plastic material;
- Operating system based on two high design ceramic discs;
- Regeneration DF or UF;
- Operating flow rate Kv = 1,14; Backwash flow rate Kv = 0,5;
- Resin volume range = 5 ÷ 40 liters;
- With Pink Injector mounted (Yellow, Blue and White Injectors included), European transformer 12/230V – 50Hz, upper screen, n.1 Base Seal O-ring, n.1 Drain Hose Connector, n.1 Brine Tube Hose Connector,
- n.1 Tube Bushing and n.1 red Brine Line Flow Control), Meter and Bypass Adjusting Bolt;
- Others injectors (6800 Series) and accessories not included, to order separately.

Ref	Description	Fam.	Subfam.		
RF79B-LCD	VALV. AUT. SOFT. F79B-LCD (83602B) VOL. 3/4″ DF/U	22	935		

Characteristics:	
Tank size	6” ÷ 10”
Connections In/Out	Threaded ¾” male
Pressure vessel connection	Threaded 2 ½” - 8 NPSM male
Drain line connection	Threaded ½” male
Brine line connection	Threaded ⅜” BSPT male
Distributor tube O. D. diameter	1,05” (= 27 mm)
Distributor tube length above pressure vessel	0 ± 2 mm
Weight (valve + controller)	2,25 kg
Operating pressure	1,5 ÷ 6,0 bar
Water Temperature	5°C ÷ 50°C

Box: WxLxH	Box: Q.ty	Box: Weight	Pallet: WxLxH	Pallet: Q.ty	Pallet: Weight
51x63x24	4	11	105x130x255	144	41,5

Certificates	Manufacturer	Sectors
DM174-2004 CE	Runxin	Domestic

Specific accessories

Ref	Description	Fam.	Subfam.		
RF70D	BYPASS FOR F79 VALVE - 41202	22	940		

Spare parts

Ref	Description	Fam.	Subfam.		
RF09962	O-R CONNECTOR 3/4″ FOR FLOW METER FOR RF79B-LCD VALVE	22	940		
RF09963	CONNECTOR 3/4″ FLOW METER FOR RF79B-LCD VALVE W/OO-RING - 8458026	22	940		
RF09964	ELECTRONIC CONTROL BOARD FOR RF79B-LCD VALVE	22	940		
RF09965	ELECTRONIC POSITIONING BOARD FOR RF79B-LCD VALVE	22	940		
RF09966	ELECTRONIC BOARD FOR DISPLAY RF79B-LCD VALVE	22	940		
RF09967	EUROPEAN POWER ADAPTER FOR RUNXIN RES. VALVE	22	940		
RF09968	TURBINE FLOW METER FOR RF79B-LCD	22	940		
RF09969	SEMI-TRANSPARENT COVER FOR RF79B-LCD VALVE	22	940		
RF09970	PIPE CONNECTION 3/4″ FOR RF79B-LCD VALVE	22	940		
RFP9999	RUNXIN UPPER SCREEN 1.05″ BAJONET	22	940		

F69 Runxin Residential Up Flow Softening Valves

- Electronic programmable valve, suitable for residential water softening systems;
- Valve body in NSF listed Noryl plastic material;
- Operating system based on two high design ceramic discs;
- Regeneration UF;
- Operating flow rate Kv = 1,08;
- Backwash flow rate Kv = 0,5;
- Resin volume range = 5 ÷ 40 liters;
- Available in chronometric or volumetric versions;
- F69C Valve is with Brown Injector mounted;
- F69P Valves are with Pink Injector mounted (Yellow, Blue and White Injectors included);
- European transformer 12/230V – 50Hz, upper screen, n.1 Base
- Seal O-ring, n.1 Drain Hose Connector, n.1 Brine Tube Hose
- Connector, n.1 Tube Bushing and n.1 Brine Line Flow Control);
- Others injectors (6800 Series) and accessories not included, to order separately.

Ref	Description	Fam.	Subfam.		
RF69C	VALV. SEMIAUT. SOFT. F69C (70002) CHRON. 3/4″ UF	22	935		
RF69P1Y	VALV. AUT. SOFT. F69P1Y (73502PY) CHRON. 3/4″ UF	22	930		
RF69P3Y	VALV. AUT. SOFT. F69P3Y (73602PY) VOL. 3/4″ UF	22	935		

Characteristics:	
Tank size	6” ÷ 10”
Connections In/Out	Threaded ¾” female (male optional included)
Pressure vessel connection	Threaded 2 ½” - 8 NPSM male
Drain line connection	Threaded ½” male
Brine line connection	Threaded ⅜” BSPT male
Distributor tube O. D. diameter	1,05” (= 27 mm)
Distributor tube length above pressure vessel	0 ± 2 mm
Weight (valve + controller)	2,04 kg
Operating pressure	1,5 ÷ 6,0 bar
Water Temperature	5°C ÷ 50°C

Box: WxLxH	Box: Q.ty	Box: Weight	Pallet: WxLxH	Pallet: Q.ty	Pallet: Weight

Certificates	Manufacturer	Sectors
DM174-2004 CE	Runxin	Domestic

Specific accessories

Ref	Description	Fam.	Subfam.		
RF70B	BYPASS FOR F65 AND F69 VALVES - 41102	22	940		
RF70BL	BYPASS WITH TURBINE FOR F65 AND F69 VALVES - 41102L	22	940		
RF09960	USB PROGRAMMER FOR RF69C VALVES	22	940		

Spare parts

Ref	Description	Fam.	Subfam.		
RF09967	EUROPEAN POWER ADAPTER FOR RUNXIN RES. VALVE	22	940		
RFP9999	RUNXIN UPPER SCREEN 1.05″ BAJONET	22	940		

F73A Runxin Residential Up Flow Softening Valves on a Duplex Tanks

- Electronic volumetric programmable valve, suitable for automatic and residential water softening systems;
- Valve body in NSF listed Noryl plastic material;
- Operating system based on two high design ceramic discs;
- Regeneration DF or UF;
- Operating flow rate Kv = 2,33;
- Backwash flow rate Kv = 0,88;
- Resin volume range = 45 ÷ 100 liters;
- With Red Injector mounted (Black Injector included), European transformer 12/230V –50Hz, n.2 upper screen, n.1 Base Seal O-ring, n.1 Drain Hose Connector, n.1 Brine Tube Hose Connector, n.1 Tube Bushing, n.1 Brine Line Flow Control, Meter and Bypass Adjusting Bolt;
- Others injectors (**6300 Series**) and accessories not included, to order separately.

Ref	Description	Fam.	Subfam.		
RF73A	VALV. AUT. SOFT. F73A (17603) VOL. 1″ DF/UF - ONEON DUPLEX TANKS	22	935		

Characteristics:	
Tank size	10” ÷ 14”
Connections In/Out	Threaded 1” male
Pressure vessel connection	Threaded 2 ½” - 8 NPSM male
Drain line connection	Threaded ¾” male
Brine line connection	Threaded ⅜” BSPT male
Distributor tube O. D. diameter	1,05” (= 27 mm)
Distributor tube length above pressure vessel	0 ± 2 mm
Weight (valve + controller)	4,75 kg
Operating pressure	1,5 ÷ 6,0 bar
Water Temperature	5°C ÷ 50°C

Box: WxLxH	Box: Q.ty	Box: Weight	Pallet: WxLxH	Pallet: Q.ty	Pallet: Weight

Certificates	Manufacturer	Sectors
DM174-2004 CE	Runxin	Domestic

Specific accessories

Ref	Description	Fam.	Subfam.		
RF70CL	BYPASS WITH TURBINE FOR F63 F68 F73 F82 VALVES -2974015	22	940		

Spare parts

Ref	Description	Fam.	Subfam.		
RF09967	EUROPEAN POWER ADAPTER FOR RUNXIN RES. VALVE	22	940		
RFP9999	RUNXIN UPPER SCREEN 1.05″ BAJONET	22	940		

F63 Runxin Residential Down Flow Softening Valves

- Electronic programmable valve, suitable for automatic and residential water softening systems;
- Valve body in NSF listed Noryl plastic material;
- Operating system based on two high design ceramic discs;
- Regeneration DF; Resin volume range = 40 ÷ 150 liters;
- Operating flow rate Kv = 3,13; Backwash flow rate Kv = 1,25;
- Available in chronometric or volumetric versions;
- With Green Injector mounted (Purple and White Injectors included), European transformer 12/230V – 50Hz, upper screen,
- n.1 Base Seal O-ring, n.1 Drain Hose Connector, n.1 Brine Tube Hose Connector, n.1 Tube Bushing and n.1 Brine Line Flow Control);
- Others injectors (6800 Series) and accessories not included, to order separately.

Ref	Description	Fam.	Subfam.		
RF63C3	VALV. AUT. SOFT.F63C3 (63604) VOL. 1″ DF	22	935		
RF63D3	VALV. AUT. SOFT. F63D3 (62604H) VOL. 1″ DF	22	935		

Characteristics	
Tank size	10” ÷ 18”
Connections In/Out	Threaded 1” female (male optional included)
Pressure vessel connection	Threaded 2 ½” - 8 NPSM male
Drain line connection	Threaded ½” male
Brine line connection	Threaded ⅜” BSPT male
Distributor tube O. D. diameter	1,05” (= 27 mm)
Distributor tube length above pressure vessel	0 ± 2 mm
Weight (valve + controller)	2,34 kg
Operating pressure	1,5 ÷ 6,0 bar
Water Temperature	5°C ÷ 50°C

Box: WxLxH	Box: Q.ty	Box: Weight	Pallet: WxLxH	Pallet: Q.ty	Pallet: Weight

Certificates	Manufacturer	Sectors
DM174-2004 CE	Runxin	Domestic

Specific Accessories

Ref.	Description	Fam.	Subfam.		
RF70A	BYPASS FOR F63 AND F68 VALVES - 2974001	22	940		
RF70AL	BYPASS WITH TURBINE FOR F63 AND F68 VALVES - 2974013	22	940		

Spare Parts

Ref.	Description	Fam.	Subfam.		
RF09967	EUROPEAN POWER ADAPTER FOR RUNXIN RES. VALVE	22	940		
RFP9999	RUNXIN UPPER SCREEN 1.05″ BAJONET	22	940		

F82B-LCD Runxin Residential Volumetric Valves

- Electronic volumetric programmable valve multilanguage, suitable for automatic and residential water softening systems;
- Valve body in NSF listed Noryl plastic material;
- Operating system based on two high design ceramic discs;
- Regeneration DF or UF;
- Operating flow rate Kv = 3,13;
- Backwash flow rate Kv = 1,25;
- Resin volume range = 40 ÷ 150 liters;
- With White Injector mounted (Red, Black and Orange Injectors included), European transformer 12/230V – 50Hz, upper screen, n.1 Base Seal O-ring, n.1 Drain Hose Connector, n.1 Brine Tube Hose Connector, n.1 Tube Bushing and n.1 Brine Line Flow Control), Meter and Bypass Adjusting Bolt;
- Others injectors (6800 Series) and accessories not included, to order separately

Ref	Description	Fam.	Subfam.		
RF82B-LCD	VALV. AUT. SOFT. F82B-LCD (82604B) VOL. 1″ DF/UF	22	935		

Characteristics:	
Tank size	10” ÷ 18”
Connections In/Out	Threaded 1” male
Pressure vessel connection	Threaded 2 ½” - 8 NPSM male
Drain line connection	Threaded ½” male
Brine line connection	Threaded ⅜” BSPT male
Distributor tube O. D. diameter	1,05” (= 27 mm)
Distributor tube length above pressure vessel	0 ± 2 mm
Weight (valve + controller)	2,72 kg
Operating pressure	1,5 ÷ 6,0 bar
Water Temperature	5°C ÷ 50°C

Box: WxLxH	Box: Q.ty	Box: Weight	Pallet: WxLxH	Pallet: Q.ty	Pallet: Weight

Certificates	Manufacturer	Sectors
DM174-2004 CE	Runxin	Domestic

Accessories

Ref.	Description	Fam.	Subfam.		
RF70CL	BYPASS WITH TURBINE FOR F63 F68 F73 F82 VALVES -2974015	22	940		

Spare parts

Ref	Description	Fam.	Subfam.		
RF09967	EUROPEAN POWER ADAPTER FOR RUNXIN RES. VALVE	22	940		
RFP9999	RUNXIN UPPER SCREEN 1.05″ BAJONET	22	940		

F68 Runxin Residential Up Flow Valves

- Electronic programmable valve, suitable for automatic and residential water softening systems;
- Valve body in NSF listed Noryl plastic material;
- Operating system based on two high design ceramic discs;
- Regeneration UF;
- Operating flow rate Kv = 3,13;
- Backwash flow rate Kv = 1,25;
- Resin volume range = 18 ÷ 150 liters;
- Available in volumetric version;
- With Yellow Injector mounted (Red, Black and Orange Injectors included), European transformer 12/230V – 50Hz, upper screen, n.1 Base Seal O-ring, n.1 Drain Hose Connector, n.1 Brine Tube Hose Connector, n.1 Tube Bushing and n.1 Brine Line Flow Control);
- Others injectors (Series 6800) and accessories not included, to order separately.

Ref	Description	Fam.	Subfam.		
RF68C3	VALV. AUT. SOFT. F68C3 (73604) VOL. 1″ UF	22	935		
RF68P3Y	VALV. AUT. SOFT. F68P3Y VOL. 1″ UF	22	935		

Characteristics	
Tank size	10” ÷ 18”
Connections In/Out	Threaded 1” male
Pressure vessel connection	Threaded 2 ½” - 8 NPSM male
Drain line connection	Threaded ½” male
Brine line connection	Threaded ⅜” BSPT male
Distributor tube O. D. diameter	1,05” (= 27 mm)
Distributor tube length above pressure vessel	0 ± 2 mm
Weight (valve + controller)	2,90 kg
Operating pressure	1,5 ÷ 6,0 bar
Water Temperature	5°C ÷ 50°C

Box: WxLxH	Box: Q.ty	Box: Weight	Pallet: WxLxH	Pallet: Q.ty	Pallet: Weight

Certificates	Manufacturer	Sectors
DM174-2004 CE	Runxin	Domestic

Specific Accessories

Ref	Description	Fam.	Subfam.		
RF70AL	BYPASS WITH TURBINE FOR F63 AND F68 VALVES - 2974013	22	940		
RF70CL	BYPASS WITH TURBINE FOR F63 F68 F73 F82 VALVES -2974015	22	940		

Spare Parts

Ref	Description	Fam.	Subfam.		
RF09967	EUROPEAN POWER ADAPTER FOR RUNXIN RES. VALVE	22	940		
RFP9999	RUNXIN UPPER SCREEN 1.05″ BAJONET	22	940		

F92A-LED Runxin Residential Up Flow Valve

- Electronic programmable valve, suitable for automatic and residential water softening systems;
- Valve body in NSF listed Noryl plastic material;
- Operating system based on two high design ceramic discs;
- Regeneration UF;
- Operating flow rate Kv = 4,77;
- Backwash flow rate Kv = 1,35;
- Resin volume range = 120 ÷ 300 liters;
- Available in volumetric version;
- With Red Injector mounted (Purple, Green, Yellow and Orange Injectors included), European transformer 12/230V – 50Hz, upper screen, n.1 Base Seal O-ring, n.1 Drain Hose Connector, n.1 Brine Tube Hose Connector, n.1 Tube Bushing and n.1 Brine Line Flow Control).

Ref	Description	Fam.	Subfam.		
RF92A-LED	VALV. AUT. SOFT. F92A-LED (73605) VOL. 1″ UF	22	935		

Characteristics	
Tank size	16” ÷ 24”
Connections In/Out	Threaded 1” male
Pressure vessel connection	Threaded 2 ½” - 8 UN male
Drain line connection	Threaded ½” male
Brine line connection	Threaded ⅜” BSPT male
Distributor tube O. D. diameter	32 mm
Distributor tube length above pressure vessel	0 ± 2 mm
Weight (valve + controller)	2,72 kg
Operating pressure	1,5 ÷ 6,0 bar
Water Temperature	5°C ÷ 50°C

Box: WxLxH	Box: Q.ty	Box: Weight	Pallet: WxLxH	Pallet: Q.ty	Pallet: Weight

Certificates	Manufacturer	Sectors
DM174-2004 CE	Runxin	Domestic

Spare parts

Codici	Description	Fam.	Subfam.		
RF09967	EUROPEAN POWER ADAPTER FOR RUNXIN RES. VALVE	22	940		
RF09949	UPPER SCREEN 32 MM FOR RUNXIN VALVES - 6939003	22	940		

Runxin Residential Valves Accessories

- Injectors and Accessories not included in the Runxin Residential Valves, to order separately.

Specific accessories

Ref	Description	Fam.	Subfam.		
RF06801	INJECTOR BROWN + DLFC FOR RUNXIN VALVES - 6801	22	940		
RF06802	INJECTOR PINK + DLFC FOR RUNXIN VALVES - 6802	22	940		
RF06803	INJECTOR YELLOW + DLFC FOR RUNXIN VALVES - 6803	22	940		
RF06804	INJECTOR BLUE + DLFC FOR RUNXIN VALVES - 6804	22	940		
RF06805	INJECTOR WHITE + DLFC FOR RUNXIN VALVES - 6805	22	940		
RF06806	INJECTOR BLACK + DLFC FOR RUNXIN VALVES - 6806	22	940		
RF06807	INJECTOR PURPLE + DLFC FOR RUNXIN VALVES - 6807	22	940		
RF06808	INJECTOR RED + DLFC FOR RUNXIN VALVES - 6808	22	940		
RF06809	INJECTOR GREEN FOR RUNXIN VALVES - 6809	22	940		
RF06810	INJECTOR ORANGE FOR RUNXIN VALVES - 6810	22	940		
RF09995	SERVICE WRENCH FOR RUNXIN VALVES - 8484003	22	940		
RF47010	RUNXIN CHLORINATOR FOR VALVE F79, F82 AND FOR VALVES D SERIES	22	940		
RF09998	SPACER 2.5″ M/F W/ O-RING AND WRENCH	22	940		
RF09997	SPANNER FOR SPACER RF09998	22	940		
RF09971	ENGLISH POWER ADAPTER FOR RF79B-LCD VALVE	22	940		
RF43010	BRINE WELL DIAM. 60 MM H 396 MM W/FLOATING VALVE	45	230		
RF43011	BRINE WELL DIAM. 60 MM H 308 MM W/FLOATING VALVE	45	230		
RF09922	INTERLOCK WIRE FOR RUNXIN VALVES F63(68)C - F63(65-68)P	22	940		
RFP07	434 STANDARD BRINE VALVE	22	940		
RFP08	454 STANDARD BRINE VALVE	22	940		

F74 Runxin Industrial Down Flow Valve

- Electronic programmable valve, suitable for automatic and industrial water softening systems;
- Valve body in NSF listed Noryl plastic material;
- Operating system based on two high design ceramic discs;
- Regeneration DF;
- Operating flow rate Kv = 6,50;
- Backwash flow rate Kv = 3,57;
- Resin volume range = 120 ÷ 450 liters;
- With Pink Injector mounted (Brown and Blue Injectors included), European transformer 12/230V – 50Hz, upper screen,
- n.1 Base Seal O-ring,
- n.1 Drain Hose Connector,
- n.1 Brine Tube Hose Connector,
- n.1 Tube Bushing and n.1 Brine Line Flow Control);
- Others injectors (series 7400) and accessories not included, to order separately.

Ref	Description	Fam.	Subfam.		
RF74A3	VALV. AUT. SOFT. F74A3 (63610) VOL. 2″ DF	27	965		

Characteristics	
Tank size	21” ÷ 30”
Connections In/Out	Threaded 2” male
Pressure vessel connection	Threaded 4 ”- 8 UN male
Drain line connection	Threaded 1” male
Brine line connection	Threaded ½” BSPT male
Distributor tube O. D. diameter	50 mm
Distributor tube length above pressure vessel	0 ± 2 mm
Weight (valve + controller)	5,88 kg
Operating pressure	2,0 ÷ 6,0 bar
Water Temperature	5°C ÷ 50°C

Box: WxLxH	Box: Q.ty	Box: Weight	Pallet: WxLxH	Pallet: Q.ty	Pallet: Weight

Certificates	Manufacturer	Sectors
DM174-2004 CE	Runxin	Industrial

Spare parts

Ref	Description	Fam.	Subfam.		
RF09974	EUROPEAN POWER ADAPTER FOR RUNXIN IND.VALVES	27	970		
RF09950	UPPER SCREEN 50 MM FOR RUNXIN VALVES	27	970		

F99 Runxin Industrial Down Flow Valves

- Electronic programmable valve, suitable for automatic and industrial water softening systems;
- Valve body in NSF listed Noryl plastic material;
- Operating system based on two high design ceramic discs;
- Regeneration DF;
- Operating flow rate Kv = 14,4;
- Backwash flow rate Kv = 5,72;
- Resin volume range = 450 ÷ 800 liters;
- With Yellow Injector mounted (Pink Injectors included), European transformer 12/230V – 50Hz, upper screen,
- n.1 Base Seal O-ring,
- n.1 Drain Hose Connector,
- n.1 Brine Tube Hose Connector,
- n.1 Tube Bushing and n.1 Brine Line Flow Control);
- Others injectors (7700 Series) and accessories not included, to order separately.

Ref	Description	Fam.	Subfam.		
RF99A3	VALV. AUT. SOFT. F99A3 (63615) VOL. 2″ DF	27	965		

Characteristics	
Tank size	30” ÷ 42”
Connections In/Out	Threaded 2” male
Pressure vessel connection	Threaded 4 ”- 8 UN male
Drain line connection	Threaded 1,5” male
Brine line connection	Threaded ¾” BSPT male
Distributor tube O. D. diameter	50 mm
Distributor tube length above pressure vessel	0 ± 2 mm
Weight (valve + controller)	11,50 kg
Operating pressure	2,0 ÷ 6,0 bar
Water Temperature	5°C ÷ 50°C

Box: WxLxH	Box: Q.ty	Box: Weight	Pallet: WxLxH	Pallet: Q.ty	Pallet: Weight

Certificates	Manufacturer	Sectors
DM174-2004 CE	Runxin	Industrial

Spare parts

Ref	Description	Fam.	Subfam.		
RF09974	EUROPEAN POWER ADAPTER FOR RUNXIN IND.VALVES	27	970		
RF09950	UPPER SCREEN 50 MM FOR RUNXIN VALVES	27	970		

F111 Runxin Industrial Down Flow Valves

- Electronic programmable valve, suitable for automatic and industrial water softening systems;
- Valve body in NSF listed Noryl plastic material;
- Operating system based on two high design ceramic discs;
- Regeneration DF;
- Operating flow rate Kv = 16,71;
- Backwash flow rate Kv = 18,97;
- Resin volume range = 450 ÷ 800 liters;
- Available in chronometric versions;
- With Blue Injector mounted (Yellow and White Injectors included), European transformer 12/230V – 50Hz, upper screen, n.1 Base Seal O-ring, n.1 Drain Hose Connector, n.1 Brine Tube Hose Connector, n.1 Tube Bushing and n.1 Brine Line Flow Control);
- Others injectors (7700 Series) and accessories not included, to order separately.

Ref	Description	Fam.	Subfam.		
RF111A1	VALV. AUT. SOFT. F111A1 (63520) CHRON. 2˝ DF	27	960		

Characteristics	
Tank size	30” ÷ 48”
Connections In/Out	Threaded 2” male
Pressure vessel connection	Threaded 4 ”- 8 UN male
Drain line connection	Threaded 1,5” male
Brine line connection	Threaded ¾” BSPT male
Distributor tube O. D. diameter	63 mm
Distributor tube length above pressure vessel	0 ± 2 mm
Weight (valve + controller)	11,50 kg
Operating pressure	2,0 ÷ 6,0 bar
Water Temperature	5°C ÷ 50°C

Box: WxLxH	Box: Q.ty	Box: Weight	Pallet: WxLxH	Pallet: Q.ty	Pallet: Weight

Certificates	Manufacturer	Sectors
DM174-2004 CE	Runxin	Industrial

Spare parts

Ref	Description	Fam.	Subfam.		
RF09974	EUROPEAN POWER ADAPTER FOR RUNXIN IND.VALVES	27	970		
RF09951	UPPER SCREEN 63 MM FOR RUNXIN VALVES	27	970		

- **Specific accessories** - Injectors and Accessories not included in the Runxin Industrial Valves, to order separately.

Ref.	Description	Fam.	Subfam.		
RF07401	INJECTOR BROWN + DLFC FOR RUNXIN VALVES - 7401	27	970		
RF07402	INJECTOR PINK + DLFC FOR RUNXIN VALVES - 7402	27	970		
RF07403	INJECTOR YELLOW + DLFC FOR RUNXIN VALVES - 7403	27	970		
RF07404	INJECTOR BLUE + DLFC FOR RUNXIN VALVES - 7404	27	970		
RF07701	INJECTOR BROWN FOR RUNXIN VALVES - 7701	27	970		
RF07702	INJECTOR PINK FOR RUNXIN VALVES - 7702	27	970		
RF07703	INJECTOR YELLOW FOR RUNXIN VALVES - 7703	27	970		
RF07704	INJECTOR BLUE FOR RUNXIN VALVES - 7704	27	970		
RF07705	INJECTOR WHITE FOR RUNXIN VALVES - 7705	27	970		
RF09995	SERVICE WRENCH FOR RUNXIN VALVES - 8484003	22	940		

F75 Runxin Industrial Filter Valve

- Electronic valve, suitable for automatic and industrial water filtering systems;
- Valve body in NSF listed Noryl plastic material;
- Operating system based on two high design ceramic discs;
- Operating flow rate Kv = 8,7;
- Backwash flow rate Kv = 8,0;
- With European transformer 12/230V – 50Hz, upper screen,
- n.1 Base Seal O-ring, n.1 Drain Hose Connector.

Ref	Description	Fam.	Subfam.		
RF75A	VALV. AUT. FILTER F75A 2˝	27	968		

Characteristics	
Tank size	16” ÷ 24”
Connections In/Out	Threaded 2” male
Pressure vessel connection	Threaded 4 ”- 8 UN male
Drain line connection	Threaded 2” male
Distributor tube O. D. diameter	50 mm
Distributor tube length above pressure vessel	0 ± 2 mm
Weight (valve + controller)	4,4 kg
Operating pressure	2,0 ÷ 6,0 bar
Water Temperature	5°C ÷ 50°C

Box: WxLxH	Box: Q.ty	Box: Weight	Pallet: WxLxH	Pallet: Q.ty	Pallet: Weight

Certificates	Manufacturer	Sectors
DM174-2004 CE	Runxin	Industrial

Spare parts

Ref	Description	Fam.	Subfam.		
RF09974	EUROPEAN POWER ADAPTER FOR RUNXIN IND.VALVES	27	970		
RF09950	UPPER SCREEN 50 MM FOR RUNXIN VALVES	27	970		

Runxin Manual Softening Valves

- Multi-way valves having five functions: service, backwash, brine, fast rinse and refill;
- IN/OUT connections ¾” BSPP female;
- Drain line connection ½” BSPP female;
- Brine line connection ⅜” BSPT male;
- Riser tube diameter 1,05” (26,7 mm);
- Max suggested flow 1,5 m3/h (only valve) @ Δp = 1,75 bar;
- Operating flow rate Kv = 1,09;
- Backwash flow rate Kv = 0,55;
- Max operating pressure 6 bar @ 20°C;
- Max operating temperature 50°C;
- Upper screen included.

Ref	Description	Fam.	Subfam.		
RF64B	VALV. MANUAL SOFT. F64B (61202) 3/4″ DF	22	950		
RF64BC	VALV. MANUAL SOFT. F64BC (61202C) 3/4″ DF - SIDECONTROL	22	950		

Ref	Description	Mounting
RF64B	VALV. MANUAL SOFT. F64B (61202) 3/4″ DF	Vertical
RF64BC	VALV. MANUAL SOFT. F64BC (61202C) 3/4″ DF - SIDECONTROL	Side

Box: WxLxH	Box: Q.ty	Box: Weight	Pallet: WxLxH	Pallet: Q.ty	Pallet: Weight

Certificates	Manufacturer	Sectors
	Runxin	Domestic

Runxin Manual Filter Valves

Max 4 m³/h Multi-way Manual Valve

- Multi-way valve having three functions: filtration, backwash, rinse;
- Fits threaded tanks 2 ½” – 8NPSM;
- IN/OUT connections and drain 1” BSPP female;
- Riser tube diameter 1,05” (26,7 mm);
- Max suggested flow 4 m3/h (only valve);
- Max operating pressure 6 bar @ 20°C;
- Max operating temperature 50°C;
- Upper screen included
- **ATTENTION**: this multi-way valve is prohibited to change working position with pressure; make sure to shut down pump or close feed valve before rotating the handle to other working position.

Ref	Description	Fam.	Subfam.		
PV410	MULTI-WAY MANUAL VALVE 2.5˝ IN/OUT AND DRAIN W/UPPER SCREEN 1.05˝	50	240		

Box: WxLxH	Box: Q.ty	Box: Weight	Pallet: WxLxH	Pallet: Q.ty	Pallet: Weight

Certificates	Manufacturer	Sectors
	Runxin	Industrial

Max 10 m³/h Multi-way Manual Valves

- Multi-way valve having three functions: filtration, backwash, rinse;
- Fits threaded tanks 4” – 8UN;
- IN/OUT connections 2” BSPP female;
- Drain line connection 1,5” BSPP female;
- Riser tube diameter 50 mm;
- Max suggested flow 10 m3/h (only valve) @ Δp = 1,75 bar;
- Operating flow rate Kv = 8,2;
- Backwash flow rate Kv = 6,1;
- Max operating pressure 6 bar @ 20°C;
- Max operating temperature 50°C;
- Upper screen included.
- **ATTENTION**: this multi-way valve is prohibited to change working position with pressure; make sure to shut down pump or close feed valve before rotating the handle to other working position.

Ref	Description	Fam.	Subfam.		
RF56D1	VALV. MANUAL FILTER F56D1 (51110) 2˝F - METAL HANDLE	22	980		
RF56D2	VALV. MANUAL FILTER F56D2 (51210) 2˝F - PLASTIC HANDLE	22	980		

Box: WxLxH	Box: Q.ty	Box: Weight	Pallet: WxLxH	Pallet: Q.ty	Pallet: Weight

Certificates	Manufacturer	Sectors
	Runxin	Industrial

Fleck Residential Valves Series 4600

- Made in European Union (Italy)
- The 4600 control valve is suitable for residential softening applications,
- fully adjustable, for efficient and reliable water treatment.
- Designed with a double backwash for less loss of hardness.
- Valve body in brass.
- It is a single piston valve, with a protective cover against atmospheric agents resistant to water, corrosion and UV rays.
- Down Flow regeneration
- Operating Flow Rate = 4.5 m³/h (20 gpm)
- Backwash Flow Rate 1.6 m³/h (7 gpm)
- Regeneration:
- - Timeclock: 7 or 12 days
- - Meter: delayed or immediate
- - Electronics
- Complete with European Transformer 230-24 V / 50/60 Hz 60 VA and 1.05” twist lock upper screen.
- OPTIONS: Mechanical controllers for simplex; Hot Water - only mechanical 65 ° C meter / 82 ° C timeclock

Ref	Description	Fam.	Subfam.		
FV460MC-600	FLECK VALV. 4600/1600 12 DAYS 0-1,2-0,25	23	505		
FV460MC-601	FLECK VALV. 4600/1600 12 DAYS 1-1,5-0,25 HW	23	505		
FV460MC-602	FLECK VALV. 4600/1600 12 DAYS 0-1,2-0,25 LWU HW	23	505		
FV460MC-603	FLECK VALV. 4600/1600 12 DAYS 0-1,2-0,25 LWU	23	505		
FV460MR-600	FLECK VALV. 4600/1600 3/4″ ECOBYPASS 8 M3 0-1,2-0,25 HW	23	505		
FV460MR-601	FLECK VALV. 4600/1600 3/4″ ECOBYPASS 8 M3 1-1,5-0,25 HW	23	505		
FV460MR-602	FLECK VALV. 4600/1600 3/4″ ECOBYPASS 8 M3 0-1,2-0,25 LWU HW	23	505		
FV460MR-603	FLECK VALV. 4600/1600 3/4″ ECOBYPASS 8 M3 1-1,5-0,25 LWU HW	23	505		
FV460MR-604	FLECK VALV. 4600/1600 3/4″ METER 8 M3 0-1,2-0,25LWU	23	505		
FV460MR-605	FLECK VALV. 4600/1600 3/4″ METER 8 M3 1-1,5-0,25LWU	23	505		
FV460SC-600	FLECK VALV. 4600/1600 SXT 0-1,2-0,25 HW	23	505		

Characteristics	
Tank size (recommended):	Softening System = 6” ÷ 12’’
In/Out Connections	Threaded ¾” or 1” BSP
Pressure vessel connection	Threaded 2,5” – 8 UN male
Drain line connection	Threaded ½” NPT or BSP
Brine line connection (1600)	Threaded ⅜”
Distributor tube O. D. diameter	1,05” (=27 mm)
Operating pressure	1,4 ÷ 8,5 bar
Water Temperature	1 ÷ 40 °C
Protection class	IP22
Height (from top of tank)	180 mm

Box: WxLxH	Box: Q.ty	Box: Weight	Pallet: WxLxH	Pallet: Q.ty	Pallet: Weight

Certificates	Manufacturer	Sectors
DM174-2004 CE, EAC	Pentair	Domestic

Accessories

Ref	Description	Fam.	Subfam.		
FVA13398-10	1″ BSP F BRASS YOKE FOR 5800, 9000 AND 9100 VALVE	23	590		
FVA18706-10	1″ BSP M PLASTIC YOKE FOR 5800, 9000 AND 9100 VALVES	23	590		
FVA24689	3/4″ BSP M BRASS YOKE FOR 5800, 9000 AND 9100 VALVES	23	590		
FVA18706-12	3/4″ BSP M PLASTIC YOKE FOR 5800, 9000 AND 9100 VALVES	23	590		

Fleck Residential Valves Series 5600

- Made in European Union (Italy)
- The 5600 is high performance control valve, ideal for residential softening applications with multiple options (also filter). The valve body in in fiber-reinforced material is UV rays resistant and no subject to corrosion. The valve is easily programmable and very intuitive. Modular design simplifies the disassembly and the maintenance.
- The 5600 valve has a mechanical timer: the 5600SXT valve is an electronic valve: they share the same valve body (5600), but it is different for the cover and the electronic components.
- Down Flow regeneration.
- Valve body in Noryl plastic material = polyphenylene oxide (PPO).
- Operating Flow Rate = 4.5 m³/h (20 gpm)
- Backwash Flow rate = 1.6 m³/h (7 gpm)
- Regeneration:
- - Chronometric: 7 or 12 days
- - Volumetric: delayed or immediate
- - Electronics
- Complete with European Transformer 230-24 V / 50/60 Hz 60 VA and 1.05” twist lock upper screen.
- OPTIONS: SXT electronics.

Ref	Description	Fam.	Subfam.		
FV560MC-600	FLECK VALV. 5600/1600 12 DAYS 0-1,2-0,25 LWU	23	500		
FV560MC-601	FLECK VALV. 5600/1600 12 DAYS 1-1,5-0,25	23	500		
FV560MC-602	FLECK VALV. 5600/1600 12 DAYS 2-3,5-0,5	23	500		
FV560MC-603	FLECK VALV. 5600 FILTER 12 DAYS 7 GPM MW	23	500		
FV560MR-601	FLECK VALV. 5600/1600 3/4″ METER 8 M3 1-1,5-0,25	23	500		
FV560MR-602	FLECK VALV. 5600/1600 3/4″ METER 40 M3 2-3,5-0,5	23	500		
FV560MR-603	FLECK VALV. 5600/1600 3/4″ METER 8 M3 0-1,2-0,25LWU	23	500		
FV560SC-600	FLECK VALV. 5600/1600 SXT 0-1,2-0,25	23	500		
FV560SC-601	FLECK VALV. 5600/1600 SXT 1-1,5-0,25	23	500		
FV560SR-600	FLECK VALV. 5600/1600 SXT 3/4″ TURBINE 0-1,2-0,25	23	500		
FV560SR-601	FLECK VALV. 5600/1600 SXT 3/4″ TURBINE 1-1,5-0,25	23	500		
FV560SR-602	FLECK VALV. 5600/1600 SXT 3/4″ TURBINE 2-3,5-0,5	23	500		
FV560SR-603	FLECK VALV. 5600/1600 SXT 3/4″ TURBINE 1-2,4-0,25	23	500		

Characteristics	
Tank size (recommended):	Softening System = 6” ÷ 12’’
In/Out Connections	Threaded ¾” or 1” BSP
Pressure vessel connection	Threaded 2,5” – 8 UN male
Drain line connection	Threaded ½” NPT or BSP
Brine line connection (1600)	Threaded ⅜”
Distributor tube O. D. diameter	1,05” (=27 mm)
Operating pressure	1,4 ÷ 8,5 bar
Water Temperature	1 ÷ 40 °C
Protection class	IP22
Height (from top of tank)	180 mm (200 mm with programmer SXT)

Box: WxLxH	Box: Q.ty	Box: Weight	Pallet: WxLxH	Pallet: Q.ty	Pallet: Weight

Certificates	Manufacturer	Sectors
DM174-2004 CE, EAC	Pentair	Domestic

Fleck Residential Valves Series 5600

Accessories and Spare Parts

Ref	Description	Fam.	Subfam.		
FVA13398-10	1″ BSP F BRASS YOKE FOR 5800, 9000 AND 9100 VALVE	23	590		
FVA18706-10	1″ BSP M PLASTIC YOKE FOR 5800, 9000 AND 9100 VALVES	23	590		
FVA24689	3/4″ BSP M BRASS YOKE FOR 5800, 9000 AND 9100 VALVES	23	590		
FVA18706-12	3/4″ BSP M PLASTIC YOKE FOR 5800, 9000 AND 9100 VALVES	23	590		
FVA10218	MICROSWITCH (SINGLE)	23	585		
FVA24114	BRINE VALVE 1600 ASSEMBLY RESID.	23	590		
FVR12767	SCREEN BRINE LINE	23	585		
FVR13305-01	O-RING 560 CD ADAPT COUPLING	23	585		
FVR22359	HOSE BARB STRAIGHT HOT WATER	23	585		
FVR24115	S&S KIT RESID	23	585		
FVR42933-10	MAIN DRIVE GEAR 5600SE-6600-6700	23	585		
FVRKIT51	KIT ACCESSORIES 1600 WITH BV44/AC500	23	585		

Fleck Residential Valves Series 5800

- Made in European Union (Italy)
- The 5800 control valve is suitable for residential/commercial filter/softening applications. The valve body in in fiber-reinforced material is UV rays resistant and no subject to corrosion.
- 5800 represents a great step forward in the Fleck product range: the valve platform
- is made of one hydraulic valve and different controllers, allowing various options, eliminating the need to stock a variety of control valves for filter or softener applications. 5800 features an improved flow, easy servicing (one-piece seal and spacer cartridge for quick and easy replacement) and a quick set-up.
- Cartridge with seal and spacer, reduced list of spare parts and snap assembly.
- LCD - backlit display that helps in the presence of poor lighting conditions.
- Down/Up Flow regeneration, according to the models.
- Valve body in Noryl plastic material = polyphenylene oxide (PPO).
- **Operating Flow Rate** = 4.7 m³/h (21gpm) **Backwash Flow rate** = 3.8 m³/h (16 gpm)
- Regeneration: - **Chronometric**: 7 or 12 days - **Volumetric**: delayed or immediate - Electronics
- Complete with 1.05” twist lock upper screen. In 24 V with international adapter 230 VAC - 12 VDC 50/60 Hz.
- **NOTE**: Not use silicone lubricants. **OPTIONS**: Electronic LXT - SXT - XTR

Ref	Description	Fam.	Subfam.		
FV580LC-001	FLECK VALV. 5800/1600 LXT DF 000-1,5-0,125	23	510		
FV580LR-001	FLECK VALV. 5800/1600 LXT DF 3/4″ TURBINE 000-1,5-0,125	23	510		
FV580LR-002	FLECK VALV. 5800/1600 LXT UF 3/4″ TURBINE 000-1,5-0,125	23	510		
FV580LC-002	FLECK VALV. 5800/1600 LXT UF 000-1,5-0,125	23	510		
FV580LC-003	FLECK VALV. 5800 FILTER LXT 7 GPM	23	510		
FV580SC-001	FLECK VALV. 5800/1600 SXT DF 1-1,5-0,25	23	510		
FV580SR-001	FLECK VALV. 5800/1600 SXT DF 3/4″ TURBINE 1-1,5-0,25	23	510		
FV580SR-002	FLECK VALV. 5800/1600 SXT DF 3/4″ TURBINE 0-1,2-0,25	23	510		
FV580SR-003	FLECK VALV. 5800/1600 SXT UF 3/4″ TURBINE 00-1,2-0,125	23	510		
FV580SC-003	FLECK VALV. 5800/1600 SXT UF 00-1,2-0,125	23	510		
FV580SC-004	FLECK VALV. 5800 FILTER SXT 7 GPM	23	510		
FV580XC-001	FLECK VALV. 5800/1600 XTR DF 1-1,5-0,25	23	510		
FV580XR-001	FLECK VALV. 5800-1600 XTR DF 3/4″ TURBINE 1-1,5-0,25	23	510		
FV580XR-002	FLECK VALV. 5800/1600 XTR UF 3/4″ TURBINE 00-1,2-0,25	23	510		
FV580XC-003	FLECK VALV. 5800 FILTER XTR 7 GPM	23	510		

Characteristics	
Tank size (recommended):	Softening System = 6” ÷ 16’’ Filter = 8” ÷ 16’’
In/Out Connections	Threaded ¾ or 1,5” BSP to order separately
Pressure vessel connection	Threaded 2,5” – 8 UN male
Drain line connection	Threaded ½” or 1” NPT
Brine line connection (1600)	Threaded ⅜”
Distributor tube O. D. diameter	1,05” (=27 mm)
Operating pressure	1,4 ÷ 8,5 bar
Water Temperature	1 ÷ 40 °C
Protection class	IP22
Height (from top of tank)	228 mm

Box: WxLxH	Box: Q.ty	Box: Weight	Pallet: WxLxH	Pallet: Q.ty	Pallet: Weight

Certificates	Manufacturer	Sectors
DM174-2004, CE, EAC	Pentair	Domestic

Fleck Residential Valves Series 5800

Accessories

Ref	Description	Fam.	Subfam.		
FVA13398-10	1″ BSP F BRASS YOKE FOR 5800, 9000 AND 9100 VALVE	23	590		
FVA18706-10	1″ BSP M PLASTIC YOKE FOR 5800, 9000 AND 9100 VALVES	23	590		
FVA24689	3/4″ BSP M BRASS YOKE FOR 5800, 9000 AND 9100 VALVES	23	590		
FVA18706-12	3/4″ BSP M PLASTIC YOKE FOR 5800, 9000 AND 9100 VALVES	23	590		
FVAP80	P80 EMULSION TEMPORARY RUBBER ASSEMBLY LUBRICANT10 ML TUBE	23	590		

Fleck Commercial Valves Series 5810

- Made in USA
- The 5810 control valve is suitable for commercial filter/softening applications.
- The valve body in in fiber-reinforced material is UV rays resistant and no subject to corrosion.
- Developed on the same platform as the 5800, the 5810 (1” valve body) valve offers flexibility with a familiar appearance, while reducing carrying costs and product knowledge. The new 5810 valve uses the same electronic as the 5800. The SXT or touchscreen XTR controllers can be interchanged without any special tool thanks to the same plug-and-play connectors. As the 5810 valve allows multiple options, there is no need to stock a variety of control valves for filter or softener applications. Every single 5810 is engineered to adapt easily to a wide variety of water system configurations. Down/Up Flow regeneration, according to the models.
- Valve body in Noryl plastic material = polyphenylene oxide (PPO).
- D. M. n.174 dated 06/04/2004 compliant about materials suitable for contact with water for human consumption.
- Operating Flow Rate = 8.2 m³ / h (36 gpm)
- Backwash Flow rate = 6.3 m³ / h (28 gpm)
- Regeneration:
- - Chronometric: 7 or 12 days
- - Volumetric: delayed or immediate
- - Electronics
- In 24 V with international adapter 230 VAC - 12 VDC 50/60 Hz.
- **NOTE:** Upper diffuser to order separately. The DLFC must be ordered separately. **OPTIONS:** Electronic SXT – XTR

Ref	Description	Fam.	Subfam.		
FV5810SC-001	FLECK VALV. 5810 SXT FILTER 158 GPM - 32 MM DISTRIB. ADAPTER	23	512		
FV5810SC-002	FLECK VALV. 5810/1610 sxt #1 inj blfc 0.50 gpm -1,05˝ DISTRIB. ADAPTER	23	512		
FV5810SR-001	FLECK VALV. 5810/1610 sxt #1 inj blfc 0.50 gpm -1,05˝ DISTRIB. ADAPTER	23	512		
FV5810SR-002	FLECK VALV5810/1610 SXT 1.25˝ INT TURB #4 INJ BLFC 0.50 GPM 32 MM	23	512		
FV5810XC-001	FLECK VALV. 5810/1610 XTR #1 INJ BLFC 0.50 GPM 1.05˝ DISTRIB. ADAPTER	23	512		
FV5810XC-002	FLECK VALV. 5810/1610 XTR #4 INJ BLFC 0.50 GPM 32MM DISTRIB. ADAPTER	23	512		
FV5810XR-001	FLECK VALV 5810/1610 XTR 1.25˝ INTEGRAL TURB #1 INJ BLFC 0.50 GPM 1,05˝	23	512		
FV5810XR-002	FLECK VALV 5810/1610 XTR 1.25˝ INTEGRAL TURB #4 INJ BLFC 0.50 GPM 32 MM	23	512		
FV5810XR-003	FLECK VALV 5810/1610 XTR 1.25˝ INTEGRAL TURB UF#0INJ BLFC 0.50GPM 1,05˝	23	512		

Characteristics	
Tank size (recommended):	Softening System = 8” ÷ 21’’ Filter = 8” ÷ 21’’
In/Out Connections	Threaded 1”, 1,25” or 1,5” BSP to order separately
Pressure vessel connection	Threaded 2,5” – 8 UN male
Drain line connection	Threaded ¾” or 1” NPT
Brine line connection (1600)	Threaded ⅜”
Distributor tube O. D. diameter	1,05” (=27 mm) or 32 mm
Operating pressure	1,4 ÷ 8,5 bar
Water Temperature	1 ÷ 40 °C
Protection class	IP22
Height (from top of tank)	287 mm

Box: WxLxH	Box: Q.ty	Box: Weight	Pallet: WxLxH	Pallet: Q.ty	Pallet: Weight

Certificates	Manufacturer	Sectors
DM174-2004 CE, EAC	Pentair	Commercial

Fleck Commercial Valves Series 5810

Accessories

Ref	Description	Fam.	Subfam.		
FVA28764	TOP DISTRIBUTOR 32 MM FOR 5810 VALVE	23	590		
FVA28511-01	TOP DISTRIBUTOR 1,05″ FOR 5810 FILTER VALVE	23	590		
FVA28511	TOP DISTRIBUTOR 1,05″ FOR 5810 SOFTENING VALVE	23	590		
FVA61991-02	CONNECTOR ASSY 1″ BSP FOR 5810 VALVE	23	590		
FVA61991-04	CONNECTOR ASSY 1 1/4″ BSP FOR 5810 VALVE	23	590		
FVA61991-09	CONNECTOR ASSY 1 1/2″ BSP FOR 5810 VALVE	23	590		
FVA28386-ALL	DLFC KIT 1″ BSP 10 TO 25 GPM FOR VALVE 5810	23	590		
FVA28385-1.2	DLFC 3/4″ BSP ELBOW 1.2 GPM FOR VALVE 5810	23	590		
FVA28385-1.5	DLFC 3/4″ BSP ELBOW 1.5 GPM FOR VALVE 5810	23	590		
FVA28385-2	DLFC 3/4″ BSP ELBOW 2 GPM FOR VALVE 5810	23	590		
FVA28385-2.4	DLFC 3/4″ BSP ELBOW 2.4 GPM FOR VALVE 5810	23	590		
FVA28385-3	DLFC 3/4″ BSP ELBOW 3 GPM FOR VALVE 5810	23	590		
FVA28385-3.5	DLFC 3/4″ BSP ELBOW 3.5 GPM FOR VALVE 5810	23	590		
FVA28385-4	DLFC 3/4″ BSP ELBOW 4 GPM FOR VALVE 5810	23	590		
FVA28385-5	DLFC 3/4″ BSP ELBOW 5 GPM FOR VALVE 5810	23	590		
FVA28385-7	DLFC 3/4″ BSP ELBOW 7 GPM FOR VALVE 5810	23	590		

Fleck Commercial Valves Series Twin 9000

- Made in European Union (Italy)
- The 9000 is a brass valve with a fully adjustable 5-cycle control for efficient and reliable water treatment for commercial softening applications, suitable for alternating duplex systems.
- It regenerates immediately when needed for continuous soft water, keeping system clean for optimum operating efficiency and minimum maintenance.
- Valve body in brass, which permit to adapt the hot water option up to 65°C.
- Down Flow regeneration
- Operating Flow Rate = 4 m³/h (17 gpm)
- Backwash Flow Rate = 1.9 m³/h (8 gpm)
- Regeneration:
- - Volumetric: delayed or immediate
- - Electronics
- Complete with European Transformer 230-24 V / 50/60 Hz 60 VA and 1.05” twist lock upper screen.
- NOTE: Accessories for the connection of the second tank are not included, to order separately. Upper diffusers included, for both pressure tanks.
- OPTIONS: Electronic SXT - ET; Hot water 65 ° C

Ref	Description	Fam.	Subfam.		
FV900SI-600	FLECK VALV. 9000/1600 SXT 374″ METER 0-1,2-0,25	23	515		
FV900SI-601	FLECK VALV. 9000/1600 SXT 3/4″ METER 1-1,5-0,25	23	515		
FV900SI-602	FLECK VALV. 9000/1600 SXT 3/4″ METER 1-2,4-0,5	23	515		
FV900SI-603	FLECK VALV. 9000/1600 SXT 3/4″ METER 1-2,4-0,5 WITH MS ENG PLUG	23	515		
FV900SI-604	FLECK VALV. 9000/1600 SXT 1″ METER 2-2,4-0,5	23	515		
FV900SI-605	FLECK VALV. 9000/1600 SXT 3/4″ METER 2-3,5-1	23	515		
FV900SI-606	FLECK VALV. 9000/1600 SXT 3/4″ METER 2-4-1	23	515		
FV900SI-607	FLECK VALV. 9000/1600 SXT 3/4″ METER 3-5-1	23	515		
FV900SI-608	FLECK VALV. 9000/1600 SXT 3/4″ METER 3-7-1	23	515		
FV900MI-600	FLECK VALV. 9000/1600 3/4″ METER 8 M3 1-1,5-0,25	23	515		
FV900MI-601	FLECK VALV. 9000/1600 3/4″ METER 8 M3 1-2,4-0,5	23	515		
FV900MI-602	FLECK VALV. 9000/1600 3/4″ METER 40 M3 1-2,4-0,5	23	515		
FV900MI-603	FLECK VALV. 9000/1600 3/4″ METER 40 M3 2-3,5-1	23	515		
FV900MI-604	FLECK VALV. 9000/1600 3/4″ METER 40 M3 2-4-1	23	515		
FV900MI-605	FLECK VALV. 9000/1600 3/4″ METER 40 M3 3-5-1	23	515		
FV900MI-606	FLECK VALV. 9000/1600 1″ METER 100 M3 3-5-1	23	515		
FV900MI-607	FLECK VAL. 9000/1600 3/4″ METER 40 M3 3-7-1	23	515		
FV900MI-608	FLECK VALV. 9000/1600 1″ METER 100 M3 3-7-1	23	515		
FV900MI-609	FLECK VALV. 9000/1600 1″ METER 100 M3 3-7-1	23	515		

Fleck Commercial Valves Series Twin 9000

Accessories

Ref	Description	Fam.	Subfam.		
FVA18122	9000 KIT FLEXIBLE 2ND TANK ADAPTER - 200 MM	23	590		
FVA18123	9000 KIT FLEXIBLE 2ND TANK ADAPTER - 400 MM	23	590		
FVA18124	9000 KIT FLEXIBLE 2ND TANK ADAPTER - 500 MM	23	590		
FVA13398-10	1″ BSP F BRASS YOKE FOR 5800, 9000 AND 9100 VALVE	23	590		
FVA18706-10	1″ BSP M PLASTIC YOKE FOR 5800, 9000 AND 9100 VALVES	23	590		
FVA24689	3/4″ BSP M BRASS YOKE FOR 5800, 9000 AND 9100 VALVES	23	590		
FVA18706-12	3/4″ BSP M PLASTIC YOKE FOR 5800, 9000 AND 9100 VALVES	23	590		

Characteristics	
Tank size (recommended):	Softening System = 6” ÷ 16’’
Connections di Ingresso / Uscita	Threaded ¾" or 1’’ BSP to be ordered separately in quantities depending on the installation.
Pressure vessel connection	Threaded 2,5” – 8 UN male
Drain line connection	Threaded ½” or 1” NPT
Brine line connection (1600)	Threaded ⅜”
Distributor tube O. D. diameter	1,05” (=27 mm)
Operating pressure	1,8 ÷ 8,5 bar
Water Temperature	1 ÷ 40 °C
Protection class	IP22
Height (from top of tank)	165 mm

Box: WxLxH	Box: Q.ty	Box: Weight	Pallet: WxLxH	Pallet: Q.ty	Pallet: Weight

Certificates	Manufacturer	Sectors
DM174-2004 CE, EAC	Pentair	Commercial

Fleck Commercial Valves Series Twin 9100

- Made in European Union (Italy)
- The 9100 is a valve in Noryl plastic material, non-corrosive and UV-resistant, for an efficient water treatment and suitable for commercial softening applications, designed for alternating duplex systems.
- It regenerates immediately when needed for continuous soft water, keeping system clean for optimum operating efficiency and minimum maintenance.
- Valve body in Noryl plastic material = polyphenylene oxide (PPO). **Down Flow regeneration**.
- **Operating Flow Rate** = 4 m³/h (17 gpm) **Backwash Flow Rate** = 1.9 m³/h (8 gpm)
- Regeneration: - Volumetric: delayed or immediate - Electronics
- Complete with: European Transformer 230-24 V / 50/60 Hz 60 VA -1.05” twist lock upper screen -quick connections for the second tank and PVC connection pipes.
- **NOTE**: Accessories for the connection of the second tank are not included, to order separately. Upper diffusers included, for both pressure tanks. **OPTIONS**:Electronic SXT - ET

Ref	Description	Fam.	Subfam.		
FV910SI-600	FLECK VAL. 9100/1600 SXT MIXING 3/4″ METER 0-1,2-0	23	520		
FV910SI-601	FLECK VALV. 9100/1600 SXT 3/4″ METER 1-2,4-0,5	23	520		
FV910SI-602	FLECK VALV. 9100/1600 SXT 3/4″ METER MSWIRED 1-2,4-0,5	23	520		
FV910SI-603	FLECK VALV. 9100/1600 SXT 3/4″ METER MS 1-2,4-0,5	23	520		
FV910SI-604	FLECK VALV. 9100/1600 SXT 3/4″ MS 1-2,4-0,5 ENG.PLUG	23	520		
FV910SI-605	FLECK VALV. 9100/1600 SXT MIXING 3/4″ METER 1-2,4-1	23	520		
FV910SI-606	FLECK VALV. 9100/1600 SXT 3/4″ METER 2-3,5-1	23	520		
FV910SI-607	FLECK VALV. 9100/1600 SXT 3/4″ METER 3-5-1	23	520		
FV910SI-608	FLECK VALV. 9100/1600 SXT 3/4″ METER 3-5-1	23	520		
FV910MI-600	FLECK VALV. 9100/1600 3/4″ METER 8 M3 1-1,2-0,25	23	520		
FV910MI-601	FLECK VALV. 9100/1600 3/4″ METER 8 M3 1-1,5-0,5	23	520		
FV910MI-602	FLECK VALV. 9100/1600 3/4″ METER 40 M3 1-2,4-0,5	23	520		
FV910MI-603	FLECK VALV. 9100/1600 3/4″ METER 40 M3 2-3,5-1	23	520		
FV910MI-604	FLECK VALV. 9100/1600 1″ METER 100 M3 3-5-1	23	520		
FV910MI-605	FLECK VALV. 9100/1600 3/4″ METER 40 M3 3-7-1	23	520		

Characteristics	
Tank size (recommended):	Softening System = 6” ÷ 16’’
In/Out Connections	Threaded ¾" or 1’’ BSP to be ordered separately in quantities depending on the installation.
Pressure vessel connection	Threaded 2,5” – 8 UN male
Drain line connection	Threaded ½” or 1” NPT or BSP
Brine line connection (1600)	Threaded ⅜”
Distributor tube O. D. diameter	1,05” (=27 mm)
Operating pressure	1,8 ÷ 8,5 bar
Water Temperature	1 ÷ 40 °C
Protection class	IP22
Height (from top of tank)	185 mm

Box: WxLxH	Box: Q.ty	Box: Weight	Pallet: WxLxH	Pallet: Q.ty	Pallet: Weight

Certificates	Manufacturer	Sectors
DM174-2004 CE, EAC	Pentair	Commercial

Fleck Commercial Valves Series Twin 9100

Accessories

Ref	Description	Fam.	Subfam.		
FVA28243-07	9100 PVC CONNECTING TUBES 2ND TANK ADAPTER - 7″	23	590		
FVA28243-09	9100 PVC CONNECTING TUBES 2ND TANK ADAPTER - 9″	23	590		
FVA28243-12	9100 PVC CONNECTING TUBES 2ND TANK ADAPTER - 12″	23	590		
FVA28243-16	9100 PVC CONNECTING TUBES 2ND TANK ADAPTER - 16″	23	590		
FVA13398-10	1″ BSP F BRASS YOKE FOR 5800, 9000 AND 9100 VALVE	23	590		
FVA18706-10	1″ BSP M PLASTIC YOKE FOR 5800, 9000 AND 9100 VALVES	23	590		
FVA24689	3/4″ BSP M BRASS YOKE FOR 5800, 9000 AND 9100 VALVES	23	590		
FVA18706-12	3/4″ BSP M PLASTIC YOKE FOR 5800, 9000 AND 9100 VALVES	23	590		

Fleck Commercial Valves Series Twin 9500

- Made in European Union (Italy)
- The 9500 is a brass valve, non-corrosive and UV-resistant, with fully adjustable 5-cycle control for an efficient water treatment and suitable for commercial softening applications, designed for alternating duplex systems.
- It regenerates immediately when needed for continuous soft water, keeping system clean for optimum operating efficiency and minimum maintenance.
- Valve body in brass, which permit to adapt the hot water option up to 65°C.
- Down Flow regeneration.
- Operating Flow Rate = 8.4 m³/h (37 gpm)
- Backwash Flow Rate = 3.3 m³/h (14 gpm)
- **Regeneration**: - Volumetric: delayed or immediate - Electronics
- Complete with European Transformer 230-24 V / 50/60 Hz 60 VA
- **NOTE:** Accessories for the connection of the second tank are not included, to order separately. Upper diffusers included, for both pressure tanks
- **OPTIONS:** Electronic SXT - ET; Hot water 65 ° C

Ref	Description	Fam.	Subfam.		
FV950SI-600	FLECK VALV. 9500/1650 SXT 1.5″ METER 3-5-1	23	525		
FV950SI-601	FLECK VALV. 9500/1650 SXT 1.5″ INLINE METER 3-5-1	23	525		
FV950SI-602	FLECK VALV. 9500/1650 SXT 1.5″ METER MS 3-5-1 ENG. PLUG	23	525		
FV950SI-603	FLECK VALV. 9500/1710 SXT 1.5″ METER 3C-7-1,2	23	525		
FV950SI-604	FLECK VALV. 9500/1710 SXT 1.5″ METER 4C-10-2	23	525		
FV950SI-605	FLECK VAVL. 9500/1710 SXT 1.5″ METER 4C-15-2	23	525		
FV950SI-606	FLECK VAVL. 9500/1710 SXT 1.5″ INLINE METER 4C-15-2	23	525		
FV950SI-607	FLECK VAVL. 9500/1710 SXT 1.5″ METER MS 4C-15-2 ENG. PLUG	23	525		
FV950EI-600	FLECK VALV. 9500/1650 ET 1.5″ METER 3-5-1	23	525		
FV950EI-601	FLECK VALV. 9500/1710 ET 1.5″ METER 4C-15-2	23	525		
FV950MI-600	FLECK VALV. 9500/1650 1.5″ METER 40 M3 3-5-1	23	525		
FV950MI-602	FLECK VALV. 9500/1710 1.5″ METER 200 M3 4C-10-2	23	525		
FV950MI-603	FLECK VALV. 9500/1710 1.5″ METER 200 M3 MSWIRED 4C-10-2	23	525		
FV950MI-604	FLECK VALV. 9500/1710 1.5″ METER 40 M3 4C-10-2	23	525		
FV950MI-606	FLECK VALV. 9500/1710 1.5″ METER 40 M3 4C-15-2	23	525		

Accessories

Ref	Description	Fam.	Subfam		
FVA28137-16	9500 KIT COPPER TUBES 2ND TANK ADAPTER - 16″	23	590		
FVA28137-20	9500 KIT COPPER TUBES 2ND TANK ADAPTER - 20″	23	590		
FVA28137-24	9500 KIT COPPER TUBES 2ND TANK ADAPTER - 24″	23	590		

Fleck Commercial Valves Series Twin 9500

Characteristics	
Tank size (recommended):	Softening System = 10” ÷ 24’’
In/Out Connections	Threaded 1,5” BSP
Pressure vessel connection	Threaded 4” – 8 UN male
Drain line connection	Threaded ½” NPT or BSP
Brine line connection (1650)	Threaded ⅜”
Brine line connection (1710)	Threaded ½"
Distributor tube O. D. diameter	50 mm
Operating pressure	1,8 ÷ 8,5 bar
Water Temperature	1 ÷ 40 °C
Protection class	IP22
Height (from top of tank)	185 mm

Box: WxLxH	Box: Q.ty	Box: Weight	Pallet: WxLxH	Pallet: Q.ty	Pallet: Weight

Certificates	Manufacturer	Sectors
DM174-2004 CE, EAC	Pentair	Commercial

Accessories

Ref	Description	Fam.	Subfam.		
FVA28137-16	9500 KIT COPPER TUBES 2ND TANK ADAPTER - 16″	23	590		
FVA28137-20	9500 KIT COPPER TUBES 2ND TANK ADAPTER - 20″	23	590		
FVA28137-24	9500 KIT COPPER TUBES 2ND TANK ADAPTER - 24″	23	590		

Fleck Industrial Valves Series 2750

- Made in European Union (Italy)
- The 2750 control valve is suitable for small commercial and industrial filter or softening applications, designed for systems with one or more columns.
- It is a single piston valve, with a protective cover water, corrosion and UV rays resistant.
- Valve body in brass.
- Down Flow regeneration
- Operating Flow Rate = 5.9 m³/h (26 gpm)
- Backwash Flow Rate = 5.6 m³/h (25 gpm)
- Regeneration: Manual - Chronometric: 7 or 12 days
- - Volumetric: delayed or immediate -Electronics
- Complete with European Transformer 230-24 V / 50/60 Hz 60 VA and 1.05” twist lock upper screen.
- NOTE: For electronic models, the meter is not included, to order separately. For the filter valves, the DLFC is not included, to order separately.
- For NXT multi valve systems, please order (quantity = n-1 valves) the cable kit NXT (ref.FVABU41692) separately;
- OPTIONS: NBP piston - Manual filter - SXT - NXT electronics - Mechanical controllers for simplex and duplex - Hot water - mechanical only 65 ° C volumetric or 82 ° C chronometric

Ref	Description	Fam.	Subfam.		
FV275XC-600	FLECK VALV. 2750/1710 NO TIMER MSWIRED 4C-10-2	23	530		
FV275XC-601	FLECK VALV. 2750/1650 NO TIMER MSWIRED 3-5-1	23	530		
FV275XC-602	FLECK VALV. 2750/1600 NO TIMER HW MSWIRED 3-5-1	23	530		
FV275SC-600	FLECK VALV. 2750 FILTER SXT	23	530		
FV275SC-601	FLECK VALV. 2750 FILTER SXT NBP	23	530		
FV275SC-602	FLECK VALV. 2750 FILTER SXT NBP HW	23	530		
FV275SC-603	FLECK VALV. 2750/1650 SXT 3-5-1	23	530		
FV275NC-600	FLECK VALV. 2750 FILTER NXT NBP	23	530		
FV275NC-601	FLECK VALV. 2750 FILTER NXT	23	530		
FV275NC-602	FLECK VALV. 2750/1650 NXT 3-5-1	23	530		
FV275NC-603	FLECK VALV. 2750/1650 NXT NBP 3-5-1	23	530		
FV275NC-604	FLECK VALV. 2750/1710 NXT NBP 4C-10-2	23	530		
FV275NC-605	FLECK VALV. 2750/1600 NXT HW MSWIRED 3-5-1	23	530		
FV275NC-606	FLECK VALV. 2750/1600 NXT HW MSWIRED NBP 3-5-1	23	530		

Characteristics	
Tank size (recommended):	Softening System = 10” ÷ 24’’ Filter = 10” ÷ 21’’
In/Out Connections	Threaded 1” BSP F
Pressure vessel connection	Threaded 2,5” – 8 UN male
Drain line connection	Threaded ¾” NPT or BSP
Brine line connection (1600)	Threaded ⅜”
Brine line connection (1710)	Threaded ½”
Distributor tube O. D. diameter	1,05” (=27 mm)
Operating pressure	1,8 ÷ 8,5 bar
Water Temperature	1 ÷ 40 °C
Protection class	IP22
Height (from top of tank)	165 mm

Box: WxLxH	Box: Q.ty	Box: Weight	Pallet: WxLxH	Pallet: Q.ty	Pallet: Weight

Certificates	Manufacturer	Sectors
DM174-2004 CE, EAC	Pentair	Commercial, Industrial

Fleck Industrial Valves Series 2750

Ref	Description	Fam.	Subfam.		
FV275XM-600	FLECK VALV. 2750 FILTER MANUAL	23	530		
FV275XM-601	FLECK VALV. 2750 FILTER MANUAL NBP	23	530		
FV275MC-600	FLECK VALV. 2750 FILTER 12 DAYS	23	530		
FV275MC-601	FLECK VALV. 2750 FILTER 12 DAYS NBP	23	530		
FV275MC-602	FLECK VALV. 2750/1650 12 DAYS 3-5-1	23	530		
FV275MC-603	FLECK VALV. 2750/1710 12 DAYS 4C-10-2	23	530		
FV275MR-600	FLECK VALV. 2750/1650 1″ METER (100 M3) 3-5-1	23	530		
FV275MP-600	FLECK VALV. 2750/1650 PULSE 3-5-1	23	530		

Box: WxLxH	Box: Q.ty	Box: Weight	Pallet: WxLxH	Pallet: Q.ty	Pallet: Weight

Certificates	Manufacturer	Sectors
DM174-2004 CE, EAC	Pentair	Commercial, Industrial

Accessories

Ref	Description	Fam.	Subfam.		
FVA24202-10	DLFC 3/4″ NPT - 3/4″ BSP 2750 - 10 GPM	23	590		
FVA24202-12	DLFC 3/4″ NPT - 3/4″ BSP 2750 - 12 GPM	23	590		
FVA24202-15	DLFC 3/4″ NPT - 3/4″ BSP 2750 - 15 GPM	23	590		
FVA24202-20	DLFC 3/4″ NPT - 3/4″ BSP 2750 - 20 GPM	23	590		
FVA24202-25	DLFC 3/4″ NPT - 3/4″ BSP 2750 - 25 GPM	23	590		
FVA24202-9	DLFC 3/4″ NPT - 3/4″ BSP 2750 - 9 GPM	23	590		
FVA24212-1.2	DLFC 3/4″ NPT - 1/2″ NPT 2750 - 1,2 GPM	23	590		
FVA24212-1.5	DLFC 3/4″ NPT - 1/2″ NPT 2750 - 1,5 GPM	23	590		
FVA24212-2	DLFC 3/4″ NPT - 1/2″ NPT 2750 - 2 GPM	23	590		
FVA24212-2.4	DLFC 3/4″ NPT - 1/2″ NPT 2750 - 2,4 GPM	23	590		
FVA24212-3	DLFC 3/4″ NPT - 1/2″ NPT 2750 - 3 GPM	23	590		
FVA24212-3.5	DLFC 3/4″ NPT - 1/2″ NPT 2750 - 3,5 GPM	23	590		
FVA24212-4	DLFC 3/4″ NPT - 1/2″ NPT 2750 - 4 GPM	23	590		
FVA24212-5	DLFC 3/4″ NPT - 1/2″ NPT 2750 - 5 GPM	23	590		
FVA24212-7	DLFC 3/4″ NPT - 1/2″ NPT 2750 - 7 GPM	23	590		
FVA29096	KIT METER SS ASSY 1″ NT/NXT	23	590		
FVABU41692	CABLE KIT NXT	23	590		

Fleck Industrial Valves Series 2850

- Made in European Union (Italy)
- The 2850 control valve is suitable for small commercial and industrial filtration or softening applications, designed for systems with one or more columns.
- Valve body in brass.
- It is a single piston valve, with a cover non-corrosive, water and UV resistant.
- Down Flow regeneration
- Operating Flow Rate = 11.6 m³/h (51 gpm)
- Backwash Flow Rate = 11.1 m³/h (48 gpm)
- Regeneration: -Manual - Chronometric: 7 or 12 days - Volumetric: delayed or immediate - Electronics
- Complete with European Transformer 230-24 V / 50/60 Hz 60 VA and 2 "- Kit 8 upper screen.
- NOTE:For electronic models, the meter is not included, to order separately. For the filter valves, the DLFC is not included, to order separately.
- For NXT multi valve systems, please order (quantity = n-1 valves) the cable kit NXT (ref.FVABU41692) separately;
- OPTIONS: NBP piston - Manual filter - Electronic SXT - NXT - Mechanical timers for simplex and duplex - Hot water - mechanical only 65° C volumetric or 82° C chronometric.

Ref	Description	Fam.	Subfam.		
FV285MC-600	FLECK VALV. 2850 FILTER 12 DAYS	23	535		
FV285MC-601	FLECK VALV. 2850 FILTER 12 DAYS NBP	23	535		
FV285MC-602	FLECK VALV. 2850/1650 12 DAYS 3-5-1	23	535		
FV285MC-603	FLECK VALV. 2850/1710 12 DAYS 3C-7-1,2	23	535		
FV285MC-604	FLECK VALV. 2850/1710 12 DAYS 4C-10-2	23	535		
FV285MC-605	FLECK VALV. 2850/1710 12 DAYS 4C-10-2 NBP	23	535		
FV285MC-606	FLECK VALV. 2850/1710 12 DAYS 4C-15-2	23	535		
FV285MR-600	FLECK VALV. 2850/1650 1.5˝ METER 40 M3 3-5-1	23	535		
FV285MR-601	FLECK VALV. 2850/1710 1.5˝ METER 200 M3 4C-10-2	23	535		
FV285MR-602	FLECK VALV. 2850/1710 1.5˝ METER 200 M3 4C-10-2 NBP	23	535		
FV285XM-600	FLECK VALV. 2850 FILTER MANUAL NBP	23	535		
FV285XC-600	FLECK VALV. 2850/1710 NOTIMER MSWIRED 4C-10-2	23	535		
FV285XC-601	FLECK VALV. 2850/1710 NOTIMER MSWIRED 4C-10-2 NBP	23	535		
FV285SC-600	FLECK VALV. 2850 FILTER SXT	23	535		

Characteristics	
Tank size (recommended):	Softening System = 10" ÷ 30'' Filter = 10" ÷ 24''
In/Out Connections	Threaded 1,5" BSP F
Pressure vessel connection	Threaded 4" – 8 UN male
Drain line connection	Threaded 1" NPT or BSP
Brine line connection (1650)	Threaded ⅜"
Brine line connection (1710)	Threaded ½"
Distributor tube O. D. diameter	¾ pollice NPT
Operating pressure	50 mm
Water Temperature	1 ÷ 40 °C
Protection class	IP22
Height (from top of tank)	165 mm

Box: WxLxH	Box: Q.ty	Box: Weight	Pallet: WxLxH	Pallet: Q.ty	Pallet: Weight
	1				

Certificates	Manufacturer	Sectors
DM174-2004 CE, EAC	Pentair	Commercial, Industrial

Fleck Industrial Valves Series 2850

Ref	Description	Fam.	Subfam.		
FV285SC-601	FLECK VALV. 2850 FILTER SXT NBP	23	535		
FV285SC-602	FLECK VALV. 2850/1650 SXT 3-5-1	23	535		
FV285SC-603	FLECK VALV. 2850/1650 SXT 3-5-1 NBP	23	535		
FV285SC-604	FLECK VALV. 2850/1710 SXT 3C-7-1,2	23	535		
FV285SC-605	FLECK VALV. 2850/1710 SXT 4C-10-2	23	535		
FV285SC-606	FLECK VALV. 2850/1710 SXT 4C-10-2 NBP	23	535		
FV285SC-607	FLECK VALV. 2850/1710 SXT 4C-15-2	23	535		
FV285SC-608	FLECK VALV. 2850/1710 SXT 5C-25-4 NBP	23	535		
FV285NC-600	FLECK VALV. 2850 FILTER NXT	23	535		
FV285NC-601	FLECK VALV. 2850 FILTER NXT NBP	23	535		
FV285NC-602	FLECK VALV. 2850/1650 NXT NBP 3-5-1	23	535		
FV285NC-603	FLECK VALV. 2850/1710 NXT NBP 4C-10-2	23	535		
FV285NC-604	FLECK VALV. 2850/1710 NXT NBP 4C-15-2	23	535		
FV285NC-605	FLECK VALV. 2850/1710 NXT NBP 5C-25-4	23	535		
FV285NC-606	FLECK VALV. 2850/1650 NXT 3-5-1	23	535		
FV285NC-607	FLECK VALV. 2850/1710 NXT 4C-10-2	23	535		
FV285NC-608	FLECK VALV. 2850/1710 NXT 4C-15-2	23	535		
FV285NC-609	FLECK VALV. 2850/1710 NXT 5C-25-4	23	535		

Box: WxLxH	Box: Q.ty	Box: Weight	Pallet: WxLxH	Pallet: Q.ty	Pallet: Weight

Certificates	Manufacturer	Sectors
DM174-2004 CE, EAC	Pentair	Commercial, Industrial

Accessories

Ref	Description	Fam.	Subfam.		
FVA13640	DOLE 30 GPM 2850/2910	23	590		
FVA25171-1.2	DLFC 1″ NPT - 3/4″ BSP ASSY 1.2 GPM 2850/2910/950	23	590		
FVA25171-1.5	DLFC 1″ NPT - 3/4″ BSP ASSY 1.5 GPM 2850/2910/950	23	590		
FVA25171-2	DLFC 1″ NPT - 3/4″ BSP ASSY 2 GPM 2850/2910/9500	23	590		
FVA25171-2.4	DLFC 1″ NPT - 3/4″ BSP ASSY 2.4 GPM 2850/2910/950	23	590		
FVA25171-3	DLFC 1″ NPT - 3/4″ BSP ASSY 3 GPM 2850/2910/9500	23	590		
FVA25171-4	DLFC 1″ NPT - 3/4″ BSP ASSY 4 GPM 2850/2910/9500	23	590		
FVA25171-5	DLFC 1″ NPT - 3/4″ BSP ASSY 5 GPM 2850/2910/9500	23	590		
FVA25171-7	DLFC 1″ NPT - 3/4″ BSP ASSY 7 GPM 2850/2910/9500	23	590		
FVA25581-8	DLFC 1″ NPT - 3/4″ BSP ASSY 8 GPM 2850/2910/9500	23	590		
FVA25581-9	DLFC 1″ NPT - 3/4″ BSP ASSY 9 GPM 2850/2910/9500	23	590		
FVA25581-ALL	KIT DLFC 1″ 2850/2910/9500 10 TO 25 GPM	23	590		
FVA29097	KIT METER SS ASSY 1,5″ NT/NXT	23	590		
FVA29111-3045	KIT DLFC 2″ BSP W/REDUCER 2″ TO 1″ 30 TO 45 GPM 2850 FILTER	23	590		
FVABU41692	CABLE KIT NXT	23	590		

Fleck Industrial Valves Series 2910

- Made in European Union (Italy).
- The 2910 control valve is suitable for industrial and multivalve systems, for filtration or softening applications.
- Valve body in brass.
- It is a valve characterized by superior strength with improved 2 piston-system technology to drive independent flows of service and regeneration, with a cover non-corrosive, water and UV resistant.
- Down/Up Flow regeneration, according to the models.
- Operating Flow Rate = 24 m³/h (105 gpm)
- Backwash Flow Rate = 8 m³/h (35 gpm)
- Regeneration: - Chronometric: 7 or 12 days - Volumetric: delayed or immediate - Electronics
- Complete with European Transformer 230-24 V / 50/60 Hz 60 VA and 2 "- Kit 8 upper screen.
- NOTE: For electronic models, the meter is not included, to order separately. For the filter valves, the DLFC is not included, to order separately.
- For NXT multi valve systems, please order (quantity = n-1 valves) the cable kit NXT (ref.FVABU41692) separately;
- OPTIONS: NBP piston - Filter; Electronic SXT - NXT - Mechanical controllers for simplex and duplex - Hot water - mechanical only 65° C volumetric or 82° C chronometric.

Ref	Description	Fam.	Subfam.		
FV291MD-600	FLECK VAL. 2910/1710 DUPLEX A #7 NBP 3C-7-1,2	23	540		
FV291MD-601	FLECK VAL. 2910/1710 DUPLEX B #7 NBP 3C-7-1,2	23	540		
FV291MD-602	FLECK VAL. 2910/1710 DUPLEX A #7 NBP 4C-12-2	23	540		
FV291MD-603	FLECK VAL. 2910/1710 DUPLEX B #7 NBP 4C-12-2	23	540		
FV291MD-604	FLECK VAL. 2910/1710 DUPLEX A #7 NBP 4C-15-2	23	540		
FV291MD-605	FLECK VAL. 2910/1710 DUPLEX B #7 NBP 4C-15-2	23	540		
FV291MD-606	FLECK VAL. 2910/1710 DUPLEX A #7 NBP 5C-25-4	23	540		
FV291MD-607	FLECK VAL. 2910/1710 DUPLEX B #7 NBP 5C-25-4	23	540		
FV291MD-608	FLECK VAL. 2910/1710 DUPLEX A #7 NBP 6C-30-4	23	540		
FV291MD-609	FLECK VAL. 2910/1710 DUPLEX B #7 NBP 6C-30-4	23	540		
FV291MC-601	FLECK VALV. 2910/1650 12 DAYS DF 3-5-1	23	540		
FV291MC-602	FLECK VALV. 2910/1710 12 DAYS DF 3C-7-1,2	23	540		
FV291MC-603	FLECK VALV. 2910/1710 12 DAYS DF 3C-10-2	23	540		
FV291MC-604	FLECK VALV. 2910/1710 12 DAYS DF 4C-15-2	23	540		
FV291MC-605	FLECK VALV. 2910/1710 12 DAYS DF 6C-25-4	23	540		
FV291MC-606	FLECK VALV. 2910/1710 12 DAYS DF 4C-15-2 NBP	23	540		
FV291MR-600	FLECK VALV. 2910/1650 2″ METER 75 M3 3-5-1	23	540		
FV291MR-601	FLECK VALV. 2910/1710 2″ METER 375 M3 3C-7-1,2	23	540		
FV291MR-602	FLECK VALV. 2910/1710 2″ METER 75 M3 3C-7-1,2	23	540		
FV291SC-600	FLECK VALV. 2910/1650 SXT 3-5-1	23	540		
FV291SC-601	FLECK VALV. 2910/1710 SXT 3C-7-1,2	23	540		
FV291SC-602	FLECK VALV. 2910/1710 SXT 4C-10-2	23	540		
FV291SC-603	FLECK VALV. 2910/1710 SXT 4C-15-2	23	540		
FV291SC-604	FLECK VALV. 2910/1710 SXT 5C-25-4	23	540		
FV291NC-600	FLECK VALV. 2910/1650 NXT 3-7-1 NBP	23	540		

Characteristics	
Tank size (recommended):	Softening System = 14" ÷ 36'' Filter = 14" ÷ 24''
In/Out Connections	Threaded 2" BSP F
Pressure vessel connection	Threaded 4" – 8 UN male
Drain line connection	Threaded 1" NPT or BSP
Brine line connection (1650)	Threaded ⅜"
Brine line connection (1710)	Threaded ½"
Distributor tube O. D. diameter	50 mm
Operating pressure	1,8 ÷ 8,5 bar
Water Temperature	1 ÷ 40 °C
Protection class	IP22
Height (from top of tank)	305 mm

Ref	Description	Fam.	Subfam.		
FV291NC-601	FLECK VALV. 2910/1710 NXT 3C-10-2 NBP	23	540		
FV291NC-602	FLECK VALV. 2910/1710 NXT 4C-10-2 NBP	23	540		
FV291NC-603	FLECK VALV. 2910/1710 NXT 4C-15-2 NBP	23	540		
FV291NC-604	FLECK VALV. 2910/1710 NXT 6C-25-4	23	540		
FV291NC-605	FLECK VALV. 2910/1710 NXT 6C-25-4 NBP	23	540		
FV291NC-606	FLECK VALV. 2910/1710 NXT 7C-30-7 NBP	23	540		
FV291NC-607	FLECK VALV. 2910/1710 NXT 4C-15-2 HW	23	540		
FV291NC-608	FLECK VALV. 2910/1710 NXT 4C-15-2 HW NBP	23	540		
FV291NC-609	FLECK VALV. 2910/1710 NXT UF 4C-15-2	23	540		
FV291NC-610	FLECK VALV. 2910/1710 NXT UF 4C-15-2 NBP	23	540		
FV291XC-600	FLECK VALV. 2910/1650 NOTIMER 3-5-1 NBP	23	540		
FV291XC-601	FLECK VALV. 2910/1650 NOTIMER 3-7-1 NBP	23	540		
FV291XC-602	FLECK VALV. 2910/1710 NOTIMER 4C-10-2 NBP	23	540		
FV291XC-603	FLECK VALV. 2910/1710 NOTIMER 5C-15-2 NBP	23	540		
FV291XC-604	FLECK VALV. 2910/1710 NOTIMER 5C-25-4 NBP	23	540		
FV291XC-605	FLECK VALV. 2910/1710 NOTIMER 7C-30-7 NBP	23	540		
FV291XC-606	FLECK VALV. 2910/1710 NOTIMER NOPLUG 4C-15-2 NBP	23	540		
FV291XC-607	FLECK VALV. 2910/1710 NOTIMER NOPLUG 5C-25-2 NBP	23	540		
FV291XP-600	FLECK VALV. 2910/1700 NOTIMER NOPLUG 6C-25-4-HW	23	540		

Box: WxLxH	Box: Q.ty	Box: Weight	Pallet: WxLxH	Pallet: Q.ty	Pallet: Weight

Certificates	Manufacturer	Sectors
DM174-2004 CE, EAC	Pentair	Industrial

Accessories

Ref	Description	Fam.	Subfam.		
FVA13640	DOLE 30 GPM 2850/2910	23	590		
FVA25171-1.2	DLFC 1″ NPT - 3/4″ BSP ASSY 1.2 GPM 2850/2910/950	23	590		
FVA25171-1.5	DLFC 1″ NPT - 3/4″ BSP ASSY 1.5 GPM 2850/2910/950	23	590		
FVA25171-2	DLFC 1″ NPT - 3/4″ BSP ASSY 2 GPM 2850/2910/9500	23	590		
FVA25171-2.4	DLFC 1″ NPT - 3/4″ BSP ASSY 2.4 GPM 2850/2910/950	23	590		
FVA25171-3	DLFC 1″ NPT - 3/4″ BSP ASSY 3 GPM 2850/2910/9500	23	590		
FVA25171-4	DLFC 1″ NPT - 3/4″ BSP ASSY 4 GPM 2850/2910/9500	23	590		
FVA25171-5	DLFC 1″ NPT - 3/4″ BSP ASSY 5 GPM 2850/2910/9500	23	590		
FVA25171-7	DLFC 1″ NPT - 3/4″ BSP ASSY 7 GPM 2850/2910/9500	23	590		
FVA25581-10	DLFC 1″ NPT - 3/4″ BSP ASSY 10 GPM 2850/2910/9500	23	590		
FVA25581-12	DLFC 1″ NPT - 3/4″ BSP ASSY 12 GPM 2850/2910/9500	23	590		
FVA25581-15	DLFC 1″ NPT - 3/4″ BSP ASSY 15 GPM 2850/2910/9500	23	590		
FVA25581-20	DLFC 1″ NPT - 3/4″ BSP ASSY 20 GPM 2850/2910/9500	23	590		
FVA25581-25	DLFC 1″ NPT - 3/4″ BSP ASSY 25 GPM 2850/2910/9500	23	590		
FVA25581-8	DLFC 1″ NPT - 3/4″ BSP ASSY 8 GPM 2850/2910/9500	23	590		
FVA25581-9	DLFC 1″ NPT - 3/4″ BSP ASSY 9 GPM 2850/2910/9500	23	590		
FVA25581-ALL	KIT DLFC 1″ 2850/2910/9500 10 TO 25 GPM	23	590		
FVA29098	KIT METER SS ASSY 2″ NT/NXT	23	590		
FVA28295	KIT METER ELECTRONIC 2″ PLASTIC 2910/3150	23	590		
FVABU41692	CABLE KIT NXT	23	590		

Fleck Industrial Valves Series 3150

- Made in European Union (Italy)
- The 3150 is a fully adjustable 3- or 5-cycle control valve for an efficient and
- reliable water treatment, suitable for industrial filtration and softening applications. Valve body in brass.
- It is a valve characterized by considerable strength, with a cover non-corrosive, water and UV resistant.
- Down Flow regeneration
- Operating Flow Rate = 22 m³/h (97 gpm)
- Backwash Flow Rate = 24 m³/h (105 gpm)
- Regeneration:
- - Chronometric: 7 or 12 days
- - Volumetric: delayed or immediate
- - Electronics
- Complete with European Transformer 230-24 V / 50/60 Hz 60 VA and 2 "- Kit 8 upper screen.
- NOTE: Adapter for top or side mount is not included, to be ordered separately. For electronic models, the meter is not included, to order separately. For the filter valves, the DLFC is not included, to order separately.
- For NXT multi valve systems, please order (quantity = n-1 valves) the cable kit NXT (ref.FVABU41692) separately;
- OPTIONS:
- NBP piston
- Filter;
- Electronic NXT
- Mechanical controllers for simplex and duplex
- Hot water - mechanical only 65° C volumetric or 82° C chronometric.

Ref	Description	Fam.	Subfam.		
FV315MC-600	FLECK VALV. 3150 FILTER 12 DAYS	23	545		
FV315MC-601	FLECK VALV. 3150 FILTER 12 DAYS NBP	23	545		
FV315NC-600	FLECK VALV. 3150 FILTER NXT	23	545		
FV315NC-601	FLECK VALV. 3150 FILTER NXT NBP	23	545		
FV315NC-602	FLECK VALV. 3150 FILTER NXT NBP HW	23	545		
FV315NC-603	FLECK VALV. 3150/1800 NXT 4-20-5	23	545		
FV315NC-604	FLECK VALV. 3150/1800 NXT 4-20-5 NBP	23	545		
FV315NC-605	FLECK VALV. 3150/1800 NXT 5-25-5	23	545		
FV315NC-606	FLECK VALV. 3150/1800 NXT 5-25-5 NBP	23	545		
FV315NC-607	FLECK VALV. 3150/1800 NXT 6-35-5	23	545		

Characteristics	
Tank size (recommended):	Softening System = 24"÷ 42" (Side mount filter 63'') Filter = 24"÷ 42''
In/Out Connections	Threaded 2" BSP
Pressure vessel connection	Threaded 4" – 8 UN male
Drain line connection	Threaded 2" NPT or BSP
Brine line connection (1800)	Threaded 1" NPT
Distributor tube O. D. diameter	63 mm
Operating pressure	1,8 ÷ 8,5 bar
Water Temperature	1 ÷ 40 °C
Protection class	IP22
Height (from top of tank)	254 mm

Box: WxLxH	Box: Q.ty	Box: Weight	Pallet: WxLxH	Pallet: Q.ty	Pallet: Weight

Certificates	Manufacturer	Sectors
DM174-2004 CE, EAC	Pentair	Industrial

Fleck Industrial Valves Series 3150

Ref	Description	Fam.	Subfam.		
FV315NC-608	FLECK VALV. 3150/1800 NXT 6-35-5 NBP	23	545		
FV315NC-609	FLECK VALV. 3150/1800 NXT 7-50-10	23	545		
FV315NC-610	FLECK VALV. 3150/1800 NXT 7-50-10 NBP	23	545		
FV315NC-611	FLECK VALV. 3150/1800 NXT 8-70-10	23	545		
FV315NC-612	FLECK VALV. 3150/1800 NXT 8-70-10 NBP	23	545		
FV315NC-613	FLECK VALV. 3150/1800 NXT 9-80-10	23	545		
FV315NC-614	FLECK VALV. 3150/1800 NXT 9-80-10 NBP	23	545		
FV315NC-615	FLECK VALV. 3150/1800 NXT 10-100-10	23	545		
FV315NC-616	FLECK VALV. 3150/1800 NXT 10-100-10 NBP	23	545		
FV315XC-600	FLECK VALV. 3150/1800 NOTIMER MSWIRED 4-20-5	23	545		
FV315XC-601	FLECK VALV. 3150/1800 NOTIMER NOPLUG7-50-10 HW	23	545		
FV315XC-602	FLECK VALV. 3150/1800 NOTIMER MSWIRED 4-20-5 NBP	23	545		

Box: WxLxH	Box: Q.ty	Box: Weight	Pallet: WxLxH	Pallet: Q.ty	Pallet: Weight

Certificates	Manufacturer	Sectors
DM174-2004 CE, EAC	Pentair	Industrial

Accessories

Ref	Description	Fam.	Subfam.		
FVA18023	TANK DAPT ASSY 3150 SM	23	590		
FVA18024	TANK ADAPT ASSY 3150 TM	23	590		
FVA25580-100	DLFC 2″ BSP- 2″ BSP ASSY 100 GPM 3150/3900	23	590		
FVA25580-20	DLFC 2″ BSP- 2″ BSP ASSY 20 GPM 3150/3900	23	590		
FVA25580-25	DLFC 2″ BSP- 2″ BSP ASSY 25 GPM 3150/3900	23	590		
FVA25580-30	DLFC 2″ BSP- 2″ BSP ASSY 30 GPM 3150/3900	23	590		
FVA25580-35	DLFC 2″ BSP- 2″ BSP ASSY 35 GPM 3150/3900	23	590		
FVA25580-40	DLFC 2″ BSP- 2″ BSP ASSY 40 GPM 3150/3900	23	590		
FVA25580-45	DLFC 2″ BSP- 2″ BSP ASSY 45 GPM 3150/3900	23	590		
FVA25580-50	DLFC 2″ BSP- 2″ BSP ASSY 50 GPM 3150/3900	23	590		
FVA25580-55	DLFC 2″ BSP- 2″ BSP ASSY 55 GPM 3150/3900	23	590		
FVA25580-60	DLFC 2″ BSP- 2″ BSP ASSY 60 GPM 3150/3900	23	590		
FVA25580-65	DLFC 2″ BSP- 2″ BSP ASSY 65 GPM 3150/3900	23	590		
FVA25580-70	DLFC 2″ BSP- 2″ BSP ASSY 70 GPM 3150/3900	23	590		
FVA25580-75	DLFC 2″ BSP- 2″ BSP ASSY 75 GPM 3150/3900	23	590		
FVA25580-80	DLFC 2″ BSP- 2″ BSP ASSY 80 GPM 3150/3900	23	590		
FVA25580-85	DLFC 2″ BSP- 2″ BSP ASSY 85 GPM 3150/3900	23	590		
FVA25580-90	DLFC 2″ BSP- 2″ BSP ASSY 90 GPM 3150/3900	23	590		
FVA25580-95	DLFC 2″ BSP- 2″ BSP ASSY 95 GPM 3150/3900	23	590		
FVA25580-ALL	DLFC KIT 2″ 3150/3900 30 TO 100 GPM 3150/3900	23	590		
FVA29098	KIT METER SS ASSY 2″ NT/NXT	23	590		
FVA28295	KIT METER ELECTRONIC 2″ PLASTIC 2910/3150	23	590		
FVABU41692	CABLE KIT NXT	23	590		

Fleck Industrial Valves Series 3900

- Made in European Union (Italy)
- The 3900 is a fully adjustable 3- or 5-cycle control valve for an efficient and reliable water treatment, suitable for industrial and multivalve systems, for filtration and softening applications.
- Valve body in brass.
- It is a valve characterized by considerable strength, with a cover non-corrosive, water and UV resistant.
- Down/Up Flow regeneration, according to the models.
- Operating Flow Rate = 57 m³/h (250 gpm)
- Backwash Flow Rate = 24 m³/h (105 gpm)
- Regeneration: Chronometric: 7 or 12 days - Electronics
- Complete with European Transformer 230-24 V / 50/60 Hz 60 VA
- NOTE: Upper screen is not included, to be ordered separately.
- Adapter for top or side mount is not included, to be ordered separately. For the filter valves, the DLFC is not included, to order separately.
- For NXT multi valve systems, please order (quantity = n-1 valves) the cable kit NXT (ref.FVABU41692) separately;
- OPTIONS: NBP piston - Filter - NXT electronics
- Mechanical controllers for simplex and duplex
- Hot water - mechanical only 65° C volumetric or 82° C chronometric.

Ref	Description	Fam.	Subfam.		
FV390NC-600	FLECK VALV. 3900 FILTER NXT	23	550		
FV390NC-601	FLECK VALV. 3900 FILTER NXT NBP	23	550		
FV390MC-600	FLECK VALV. 3900/1800 12 DAYS NBP 6-35-5	23	550		
FV390MC-601	FLECK VALV. 3900/1800 12 DAYS NBP 7-50-10	23	550		
FV390MC-602	FLECK VALV. 3900/1800 12 DAYS 10-100-10	23	550		
FV390MC-603	FLECK VALV. 3900/1800 12 DAYS UF NBP 7-50-10	23	550		
FV390NC-602	FLECK VALV. 3900/1800 NXT 6-35-5	23	550		
FV390NC-603	FLECK VALV. 3900/1800 NXT 7-50-10	23	550		
FV390NC-604	FLECK VALV. 3900/1800 NXT 8-70-10	23	550		
FV390NC-605	FLECK VALV. 3900/1800 NXT NBP 5-25-5	23	550		
FV390NC-606	FLECK VALV. 3900/1800 NXT NBP 6-35-5	23	550		
FV390NC-607	FLECK VALV. 3900/1800 NXT NBP 7-50-10	23	550		

Characteristics	
Tank size (recommended):	Softening System = 30”÷ 42” (30”÷63’’ side mount) Filter = 24”÷ 42’’
In/Out Connections	Threaded 3” BSP
Pressure vessel connection	Threaded 6” or Side mount
Drain line connection	Threaded 2” NPT or BSP
Brine line connection (1800)	Threaded 1” NPT
Distributor tube O. D. diameter	90 mm
Operating pressure	1,8 ÷ 8,5 bar
Water Temperature	1 ÷ 40 °C
Protection class	IP22
Height (from top of tank)	381 mm

Box: WxLxH	Box: Q.ty	Box: Weight	Pallet: WxLxH	Pallet: Q.ty	Pallet: Weight

Certificates	Manufacturer	Sectors
DM174-2004 CE, EAC	Pentair	Industrial

Ref	Description	Fam.	Subfam.		
FV390NC-608	FLECK VALV. 3900/1800 NXT NBP 8-70-10	23	550		
FV390NC-609	FLECK VALV. 3900/1800 NXT NBP 9-80-10	23	550		
FV390NC-610	FLECK VALV. 3900/1800 NXT NBP 10-100-10	23	550		
FV390XC-600	FLECK VALV. 3900/1800 NOTIMER NBP 5-25-5	23	550		
FV390XC-601	FLECK VALV. 3900/1800 NOTIMER NOPLUG NBP 6-35-5	23	550		
FV390XC-602	FLECK VALV. 3900/1800 NOTIMER NBP 7-50-10	23	550		
FV390XC-603	FLECK VALV. 3900/1800 NOTIMER NOPLUG NBP 7-50-10	23	550		
FV390XC-604	FLECK VALV. 3900/1800 NOTIMER NOPLUG NBP 7-60-10	23	550		
FV390XC-605	FLECK VALV. 3900/1800 NOTIMER NOPLUG NBP 8-70-10	23	550		
FV390XC-606	FLECK VALV. 3900/1800 NOTIMER NBP 10-100-10	23	550		

Box: WxLxH	Box: Q.ty	Box: Weight	Pallet: WxLxH	Pallet: Q.ty	Pallet: Weight

Certificates	Manufacturer	Sectors
DM174-2004 CE, EAC	Pentair	Industrial

Accessories

Ref	Description	Fam.	Subfam.		
FVA16258	FLOW DISPERSER 3″ 3900	23	590		
FVA18925	TANK ADAPT ASSY 3900 TM FLANGED 6″	23	590		
FVA18926	TANK ADAPT ASSY 3900 SM	23	590		
FVA25580-100	DLFC 2″ BSP- 2″ BSP ASSY 100 GPM 3150/3900	23	590		
FVA25580-20	DLFC 2″ BSP- 2″ BSP ASSY 20 GPM 3150/3900	23	590		
FVA25580-25	DLFC 2″ BSP- 2″ BSP ASSY 25 GPM 3150/3900	23	590		
FVA25580-30	DLFC 2″ BSP- 2″ BSP ASSY 30 GPM 3150/3900	23	590		
FVA25580-35	DLFC 2″ BSP- 2″ BSP ASSY 35 GPM 3150/3900	23	590		
FVA25580-40	DLFC 2″ BSP- 2″ BSP ASSY 40 GPM 3150/3900	23	590		
FVA25580-45	DLFC 2″ BSP- 2″ BSP ASSY 45 GPM 3150/3900	23	590		
FVA25580-50	DLFC 2″ BSP- 2″ BSP ASSY 50 GPM 3150/3900	23	590		
FVA25580-55	DLFC 2″ BSP- 2″ BSP ASSY 55 GPM 3150/3900	23	590		
FVA25580-60	DLFC 2″ BSP- 2″ BSP ASSY 60 GPM 3150/3900	23	590		
FVA25580-65	DLFC 2″ BSP- 2″ BSP ASSY 65 GPM 3150/3900	23	590		
FVA25580-70	DLFC 2″ BSP- 2″ BSP ASSY 70 GPM 3150/3900	23	590		
FVA25580-75	DLFC 2″ BSP- 2″ BSP ASSY 75 GPM 3150/3900	23	590		
FVA25580-80	DLFC 2″ BSP- 2″ BSP ASSY 80 GPM 3150/3900	23	590		
FVA25580-85	DLFC 2″ BSP- 2″ BSP ASSY 85 GPM 3150/3900	23	590		
FVA25580-90	DLFC 2″ BSP- 2″ BSP ASSY 90 GPM 3150/3900	23	590		
FVA25580-95	DLFC 2″ BSP- 2″ BSP ASSY 95 GPM 3150/3900	23	590		
FVA25580-ALL	DLFC KIT 2″ 3150/3900 30 TO 100 GPM 3150/3900	23	590		
FVA29082	KIT METER ASSY 3″ SS NXT 3900	23	590		
FVABU41692	CABLE KIT NXT	23	590		

CLACK VALVE WS1TC

CONTROL VALVE

- Top mount control valve suited for automatic residential water softening or filtration system
- Single valve, available also for twin alternating, twin parallel and multitank systems
- Transformer, Drain Line Flow Control (DLFC) washer, Top Distributor and accessories not included, to order separetely
- More informative 4 digit LCD Display with Status Indicators
- Solid state microprocessor with easy access front panel settings
- Backwash and brining ability to 21” diameter tanks
- Front panel display for time of day, days until next regeneration
- Days between regeneration feature: 1–99 days standard; 7-day optional
- Double backwash feature offers optimum regeneration, cleaning ability and efficiency
- 10 selectable pre-programmed regeneration cycles
- Coin Cell Lithium battery back-up with a 8 hour carry over
- Auto detection of 50/60 Hz line frequency, with automatic 12/24 hour time keeping formats
- Level VI 15-volt output DC power supply provides safe and easy installation
- Post treated water regenerant refil
- Reliable and proven DC drive
- Certified to NSF/ANSI 44, 61 and 372

Ref	Description	Fam.	Subfam.		
V1TCDTD-03	WS1TC VALVE DN T I-D	15	720		
V1TCDTD-M03	WS1TC VALVE DN T I-D W/MIXING VALVE	15	720		
V1TCDTE-03	WS1TC VALVE DN T I-E	15	720		
V1TCDTE-M03	WS1TC VALVE DN T I-E W/MIXING VALVE	15	720		
V1TCDTF-03	WS1TC VALVE DN T I-F	15	720		
V1TCDTF-M03	WS1TC VALVE DN T I-F W/MIXING VALVE	15	720		
V1TCBTZ-03	WS1TC VALVE BW T I-Z	15	720		

Ref	Softening System/Filter	Injector Tank Size	Downflow/Upflow	Meter	Mixing Valve
V1TCDTD-03	Softening System	9"	Downflow	Not included	Not included
V1TCDTD-M03	Softening System	9"	Downflow	Not included	included
V1TCDTE-03	Softening System	10"	Downflow	Not included	Not included
V1TCDTE-M03	Softening System	10"	Downflow	Not included	included
V1TCDTF-03	Softening System	12"	Downflow	Not included	Not included
V1TCDTF-M03	Softening System	12"	Downflow	Not included	included
V1TCBTZ-03	Filter	N/A	Backwash	Not included	Not included

- **NOTE**:Controls listed are priced without a power cord or transformer. For AC Adapter (Transformer) selection see “ACCESSORIES” section (V3186-XX). Drain Line Flow Controls (DLFC) washer is not included. Please order separately: reference order number V3162-007 through V3162-100. 1,05” Top Distributor is not included. Please order separately: reference order number AV071.

Box: WxLxH	Box: Q.ty	Box: Weight	Pallet: WxLxH	Pallet: Q.ty	Pallet: Weight
	4			160	

Certificates	Manufacturer	Sectors
DM174-2004, ACS, CE	Clack	Domestic

SPECIFIC		FLOW RATES	
Inlet/Outlet Fittings (to order separately)	¾" to 1,25" male BST	Service Δp 1 bar/15 psi drop (includes bypass)	6,12 m³/h
Cycles	Up to 6	Backwash Δp 1,7 bar/25 psi drop (includes bypass)	6,12 m³/h
Valve Material	Noryl or equivalent	Cv Service	7,0
Regeneration	Downflow or Upflow	Cv Backwash	5,4

OPERATING PRESSURES		OPERATING TEMPERATURES	
Minimum/Maximum	1,4 ÷ 8,6 bar	Minimum/Maximum	4° ÷ 43° C

Distributor Pilot	1,05"
Drain Line	¾" or 1” NPT
Brine Line	⅜" or ½" OD Poly Tube
Mounting Base	2 ½" - 8 NPSM
Distributor tube length above pressure vessel	+/- 13 mm
Weight	2 kg

ELECTRICAL SPECIFICATIONS		TANK APPLICATIONS	
Supply Voltage	200V AC to 240V AC	Water Softener	6" ÷ 21" diameter
Supply Frequency	50/60 Hz	Water Filter	6" ÷ 21" diameter
Output Voltage	15VDC		
Output Current	500 mA		

CYCLES OF OPERATION (Softener Downflow)	
Backwash 1st (upflow)	3 ÷ 12 minutes
Regenerate Draw/Slow Rinse (downflow)	50 ÷ 70 minutes
Backwash 2nd (upflow)	3 ÷ 12 minutes
Fast Rinse (downflow)	3 ÷ 8 minutes
Regenerant Refill (in service with treated water)	As Programmed
Service (downflow)	

Options: Backwash Filter, Bypass, Weather Cover

Compatible with the following typical concentration of regenerants or chemicals: Sodium chloride, potassium chloride, potassium permanganate, sodium bisulfite, chlorine and chloramines

CLACK VALVE WS1EI

CONTROL VALVE

- Top mount control valve suited for automatic residential water softening or filtration system.
- Single valve, available also for twin alternating, twin parallel and multitank systems.
- Transformer, Drain Line Flow Control (DLFC) washer, Top Distributor and accessories not included, to order separetely.
- Solid state microprocessor with easy access front panel setting.
- Front panel display for time of day, days until next regeneration, volume remaining, current flow rate and total volume used (Totalizer).
- Four methods to initiate regeneration; meter immediate, meter delayed, time clock delayed or pressure differential.
- Optional double backwash feature o fers optimum regeneration, cleaning ability and efficiency.
- Fully adjustable cycle times with 6-cycle control delivers controlled backwash, downflow brining/slow rinse, second backwash, fast rinse, refill and downflow service.
- Coin Cell Lithium battery back-up with an 8 hour carry over.
- Level VI 15-volt output DC power supply provides safe and easy installation.
- Control valve design provides optimum service and backwash rates.
- Post treated water regenerant refill.
- Reliable and proven DC drive.
- Certified to NSF/ANSI 44, 61 and 372.

Ref	Description	Fam.	Subfam.		
V1EIDMC-03	WS1EI VALVE DN M I-C	15	710		
V1EIDMC-M03	WS1EI VALVE DN M I-C W/MIXING VALVE	15	710		
V1EIDMD-03	WS1EI VALVE DN M I-D	15	710		
V1EIDMD-M03	WS1EI VALVE DN M I-D W/MIXING VALVE	15	710		
V1EIDME-03	WS1EI VALVE DN M I-E	15	710		
V1EIDME-M03	WS1EI VALVE DN M I-E W/MIXING VALVE	15	710		
V1EIDMF-03	WS1EI VALVE DN M I-F	15	710		
V1EIDMF-M03	WS1EI VALVE DN M I-F W/MIXING VALVE	15	710		
V1EIUMA-03	WS1EI VALVE UP M I-A	15	710		
V1EIUMA-M03	WS1EI VALVE UP M I-A W/MIXING VALVE	15	710		
V1EIUMB-03	WS1EI VALVE UP M I-B	15	710		
V1EIUMB-M03	WS1EI VALVE UP M I-B W/MIXING VALVE	15	710		
V1EIUMC-03	WS1EI VALVE UP M I-C	15	710		
V1EIUMC-M03	WS1EI VALVE UP M I-C W/MIXING VALVE	15	710		
V1EIDTE-03	WS1EI VALVE DN T I-E	15	710		
V1EIDTE-M03	WS1EI VALVE DN T I-E W/MIXING VALVE	15	710		
V1EIBMZ-03	WS1EI VALVE BW M I-Z	15	710		
V1EIBTZ-03	WS1EI VALVE BW T I-Z	15	710		

CLACK VALVE WS1EI

Ref	Softening System/Filter	Injector Tank Size	Downflow/Upflow	Meter	Mixing Valve
V1EIDMC-03	Softening System	8"	Downflow	included	Not included
V1EIDMC-M03	Softening System	8"	Downflow	included	included
V1EIDMD-03	Softening System	9"	Downflow	included	Not included
V1EIDMD-M03	Softening System	9"	Downflow	included	included
V1EIDME-03	Softening System	10"	Downflow	included	Not included
V1EIDME-M03	Softening System	10"	Downflow	included	included
V1EIDMF-03	Softening System	12"	Downflow	included	Not included
V1EIDMF-M03	Softening System	12"	Downflow	included	included
V1EIUMA-03	Softening System	8"	Uplflow	included	Not included
V1EIUMA-M03	Softening System	8"	Uplflow	included	included
V1EIUMB-03	Softening System	9"	Uplflow	included	Not included
V1EIUMB-M03	Softening System	9"	Uplflow	included	included
V1EIUMC-03	Softening System	10"	Uplflow	included	Not included
V1EIUMC-M03	Softening System	10"	Uplflow	included	included
V1EIDTE-03	Softening System	10"	Downflow	Not included	Not included
V1EIDTE-M03	Softening System	10"	Downflow	Not included	included
V1EIBMZ-03	Filter	N/A	Backwash	included	Not included
V1EIBTZ-03	Filter	N/A	Backwash	Not included	Not included

- **NOTE**:Controls listed are priced without a power cord or transformer. For AC Adapter (Transformer) selection see “ACCESSORIES” section (V3186-XX). Drain Line Flow Controls (DLFC) washer is not included. Please order separately: reference order number V3162-007 through V3162-100. 1,05” Top Distributor is not included. Please order separately: reference order number AV071.

Box: WxLxH	Box: Q.ty	Box: Weight	Pallet: WxLxH	Pallet: Q.ty	Pallet: Weight
	4			160	

Certificates	Manufacturer	Sectors
DM174-2004, ACS, CE	Clack	Domestic

CLACK VALVE WS1EI

SPECIFIC		FLOW RATES	
Inlet/Outlet Fittings (to order separately)	¾" to 1,25" male BST	Service Δp 1 bar/15 psi drop (includes bypass and meter)	6,12 m³/h
Cycles	Up to 6	Backwash Δp 1,7 bar/25 psidrop (includes bypass)	6,12 m³/h
Valve Material	Noryl or equivalent	CV Service	7,0
Regeneration	Downflow or Upflow	CV Backwash	5,4

OPERATING PRESSURES		OPERATING TEMPERATURES	
Minimum/Maximum	1,4 ÷ 8,6 bar	Minimum/Maximum	4° ÷ 43° C

METER			
Accuracy	± 5%	Distributor Pilot	1,05" OD Pipe
Flow Rate Range	0,95 ÷ 102 lpm	Drain Line	¾” or 1” NPT
Volume Range	0,02 ÷ 5.700 m³	Brine Line	3/8” or ½” OD Poly Tube
Totalizer	0,001 - 9.99.999 m³	Mounting Base	2 ½” - 8 NPSM
		Distributor tube length above pressure vessel	+/- 13 mm
		Weight	2 kg

ELECTRICAL SPECIFICATIONS		TANK APPLICATIONS	
Supply Voltage	200V AC to 240V AC	Water Softener	6" ÷ 21" diameter
Supply Frequency	50/60 Hz	Water Filter	6" ÷ 21" diameter
Output Voltage	15VDC		
Output Current	500 mA		

CYCLES OF OPERATION	
Backwash 1st (upflow)	1 ÷ 95 minutes - Backwash 1-9
Regenerate Draw/Slow Rinse (downflow)	1 ÷ 180 minutes
Backwash 2nd (upflow)	1 ÷ 95 minutes - Rinse 1-9
Fast Rinse (downflow)	1 ÷ 95 minutes
Regenerant Refill (in service with treated water)	0,1 ÷ 99 minutes
Service (downflow)	

Options: Backwash Filter, Weather Cover

Compatible with the following typical concentrations of regenerants or chemicals: Sodium chloride, potassium chloride, potassium permanganate, sodium bisulfite, chlorine and chloramines.

CLACK VALVE TT1EI

TWIN ALTERNATING CONTROL VALVE

- Transformer, Drain Line Flow Control (DLFC) washer, Top Distributor and accessories not included, to order separately;
- Solid state microprocessor with easy access front panel setting
- Front panel display for time of day, days until next regeneration, volume remaining, current flow rate and total volume used (Totalizer) and Tank in Service Indication;
- Four methods to initiate regeneration; meter immediate, meter delayed, time clock delayed or pressure differential
- Optional double backwash feature offers optimum regeneration, cleaning ability and efficiency
- Fully adjustable cycle times with 6-cycle control delivers controlled backwash, downflow brining/slow rinse, second backwash, fast rinse, refill and downflow service
- Coin Cell Lithium battery back-up with an 8 hour carry over
- Level VI 15-volt output DC power supply provides safe and easy installation
- Control valve design provides optimum service and backwash rates
- Post treated water regenerant refill
- Reliable and proven DC drive
- Certified to NSF/ANSI 44, 61 and 372.
- If you need a different Injector Tank Size, please order separately the relevant Injector and the ref. V4052-01 (Interconnect Kit).

Ref	Description	Fam.	Subfam.		
VTT1EIDME-03	TT1EI VALVE DN M I-E	15	710		

Ref	Softening System/Filter	Ø Injector Tank Size	Downflow/Upflow	Meter	Mixing Valve
VTT1EIDME-03	Softening System	10"	Downflow	included	Not included

NOTE: Controls listed are priced without a power cord or transformer. For AC Adapter (Transformer) selection see “ACCESSORIES” section (V3186-XX). Drain Line Flow Controls (DLFC) washer is not included. Please order separately: reference order number V3162-007 through V3162-100. 1,05” Top Distributors are not included. Please order separately: reference order number AV071.

Box: WxLxH	Box: Q.ty	Box: Weight	Pallet: WxLxH	Pallet: Q.ty	Pallet: Weight
	1				

Certificates	Manufacturer	Sectors
DM174-2004, ACS, CE	Clack	Domestic

CLACK VALVE WS1CI

CONTROL VALVE

- Top mount control valve suited for automatic residential water softening or filtration system
- Single valve, available also for twin alternating, twin parallel and multitank systems
- Transformer, Drain Line Flow Control (DLFC) washer, Top Distributor and accessories not included, to order separetely
- Solid state microprocessor with easy access front panel settings
- Four methods to initiate regeneration; meter immediate, meter delayed, time clock delayed or pressure differential
- Program in ppm, French degrees, German degrees, or cubic meters
- Fully programmable regeneration cycle sequence (maximum 9)
- Programmable regeneration cycle times
- Days override feature; 1 – 28 days available
- Stores system configuration and operation data in nonvolatile memor
- Coin Cell Lithium battery back-up with a 24 hour carry over
- Level VI 15-volt output DC power supply provides safe and easy installation
- Control valve design provides optimum service and backwash rates
- Pre or Post treated water regenerant refil
- Mixing valve option available
- Low salt alarm
- 24-hour clock
- Reliable and proven DC drive
- Certified to NSF/ANSI 44, 61 and 372

Ref	Description	Fam.	Subfam.		
V1CIDMC-03	WS1CI VALVE DN M I-C	15	700		
V1CIDMC-M03	WS1CI VALVE DN M I-C W/MIXING VALVE	15	700		
V1CIDMD-03	WS1CI VALVE DN M I-D	15	700		
V1CIDMD-M03	WS1CI VALVE DN M I-D W/MIXING VALVE	15	700		
V1CIDME-03	WS1CI VALVE DN M I- E	15	700		
V1CIDME-M03	WS1CI VALVE DN M I- E W/MIXING VALVE	15	700		
V1CIDMF-03	WS1CI VALVE DN M I-F	15	700		
V1CIDMF-M03	WS1CI VALVE DN M I-F W/MIXING VALVE	15	700		
V1CIUMA-03	WS1CI VALVE UP M I-A	15	700		
V1CIUMA-M03	WS1CI VALVE UP M I-A W/MIXING VALVE	15	700		
V1CIUMB-03	WS1CI VALVE UP M I-B	15	700		
V1CIUMB-M03	WS1CI VALVE UP M I-B W/MIXING VALVE	15	700		
V1CIUMC-03	WS1CI VALVE UP M I-C	15	700		
V1CIUMC-M03	WS1CI VALVE UP M I-C W/MIXING VALVE	15	700		
V1CIDTE-03	WS1CI VALVE DN T I-E	15	700		
V1CIDTE-M03	WS1CI VALVE DN T I-E W/MIXING VALVE	15	700		
V1CIBMZ-03	WS1CI VALVE BW M I-Z	15	700		
V1CIBTZ-03	WS1CI VALVE BW T I-Z	15	700		

CLACK VALVE WS1CI

Ref	Softening System/Filter	Injector Tank Size	Downflow/Upflow	Meter	Mixing Valve
V1CIDMC-03	Softening System	8"	Downflow	included	Not included
V1CIDMC-M03	Softening System	8"	Downflow	included	included
V1CIDMD-03	Softening System	9"	Downflow	included	Not included
V1CIDMD-M03	Softening System	9"	Downflow	included	included
V1CIDME-03	Softening System	10"	Downflow	included	Not included
V1CIDME-M03	Softening System	10"	Downflow	included	included
V1CIDMF-03	Softening System	12"	Downflow	included	Not included
V1CIDMF-M03	Softening System	12"	Downflow	included	included
V1CIUMA-03	Softening System	8"	Upflow	included	Not included
V1CIUMA-M03	Softening System	8"	Upflow	included	included
V1CIUMB-03	Softening System	9"	Upflow	included	Not included
V1CIUMB-M03	Softening System	9"	Upflow	included	included
V1CIUMC-03	Softening System	10"	Upflow	included	Not included
V1CIUMC-M03	Softening System	10"	Upflow	included	included
V1CIDTE-03	Softening System	10"	Downflow	Not included	Not included
V1CIDTE-M03	Softening System	10"	Downflow	Not included	included
V1CIBMZ-03	Filter	N/A	Backwash	included	Not included
V1CIBTZ-03	Filter	N/A	Backwash	Not included	Not included

- **NOTE**:Controls listed are priced without a power cord or transformer. For AC Adapter (Transformer) selection see “ACCESSORIES” section (V3186-XX). Drain Line Flow Controls (DLFC) washer is not included. Please order separately: reference order number V3162-007 through V3162-100. 1,05” Top Distributor is not included. Please order separately: reference order number AV071.

Box: WxLxH	Box: Q.ty	Box: Weight	Pallet: WxLxH	Pallet: Q.ty	Pallet: Weight
	4			160	

Certificates	Manufacturer	Sectors
DM174-2004, ACS, CE	Clack	Domestic

CLACK VALVE WS1CI

SPECIFIC		FLOW RATES	
Inlet/Outlet Fittings (to order separately)	¾" to 1,25" male BST	Service Δp 15 psi/1 bar drop (includes bypass and meter)	6,12 m³/h
Cycles	Up to 9	Backwash Δp 25 psi/1.7 bar drop (includes bypass)	6,12 m³/h
Valve Material	Noryl or equivalent	Cv Service	7,0
Regeneration	Downflow or Upflow	Cv Backwash	5,4

OPERATING PRESSURES		OPERATING TEMPERATURES	
Minimum/Maximum	1,4 ÷ 8,6 bar	Minimum/Maximum	4° ÷ 43° C

METER			
Accuracy	± 5%	Distributor Pilot	1,05"
Flow Rate Range	0,95 ÷ 102 lpm	Drain Line	¾" or 1" NPT
Volume Range	0,02 ÷ 5.700 m3	Brine Line	3/8" or ½" OD Poly Tube
Totalizer	1 - 99.999 m3	Mounting Base	2 ½" - 8 NPSM
		Distributor tube length above pressure vessel	+/- 13 mm
		Weight	2 kg

ELECTRICAL SPECIFICATIONS		TANK APPLICATIONS	
Supply Voltage	da 200V AC a 240V AC	Water Softener	6" ÷ 21" diameter
Supply Frequency	50/60 Hz	Water Filter	6" ÷ 21" diameter
Output Voltage	15VDC		
Output Current	500 mA		

CYCLES OF OPERATION Choose up to nine regeneration cycles, in any order, with a wide range of available values	
Backwash	1 ÷ 120 minutes
Rinse	1 ÷ 120 minutes
Pause (service)	1 ÷ 480 minutes
Brine (co-current)	1 ÷ 180 minutes
Brine (counter-current)	1 ÷ 180 minutes
Refill (softener)	0,05 ÷ 90,00 kg
Refill (filter)	0,2 ÷ 76,0 liters

Options: Backwash Filter, Bypass, Weather Cover

Compatible with the following typical concentrations of regenerants or chemicals: Sodium chloride, potassium chloride, potassium permanganate, sodium bisulfite, chlorine and chloramines

CLACK VALVE TT1CI

CONTROL VALVE

- Transformer, Drain Line Flow Control (DLFC) washer, Top Distributor and accessories not included, to order separately;
- Solid state microprocessor with easy access front panel settings
- Four methods to initiate regeneration; meter immediate, meter delayed, time clock delayed or pressure differential
- Program in ppm, French degrees, German degrees, or cubic meters
- Fully programmable regeneration cycle sequence (maximum 9)
- Programmable regeneration cycle times
- Days override feature; 1 - 28 days available
- Stores system configuration and operation data in nonvolatile memory
- Coin Cell Lithium battery back-up with a 24 hour carry over
- Level VI 15-volt output DC power supply provides safe and easy installation
- Control valve design provides optimum service and backwash rates
- Pre or Post treated water regenerant refill
- Mixing valve option available
- Low salt alarm
- 24-hour clock
- Reliable and proven DC drive
- Certified to NSF/ANSI 44, 61 and 372

If you need a different Injector Tank Size, please order separately the relevant Injector and the ref. V4052-01 (Interconnect Kit)

Ref	Description	Fam.	Subfam.		
VTT1CIDME-03	TT1CI VALVE DN M I-E	15	700		

Ref	Softening System/Filter	Ø Injector Tank Size	Downflow/Upflow	Meter	Mixing Valve
VTT1CIDME-03	Softening System	10"	Downflow	included	Not included

NOTE:Controls listed are priced without a power cord or transformer. For AC Adapter (Transformer) selection see “ACCESSORIES” section (V3186-XX).Drain Line Flow Controls (DLFC) washer is not included. Please order separately: reference order number V3162-007 through V3162-100. 1,05” Top Distributors are not included. Please order separately: reference order number AV071.

Box: WxLxH	Box: Q.ty	Box: Weight	Pallet: WxLxH	Pallet: Q.ty	Pallet: Weight
	1				

Certificates	Manufacturer	Sectors
DM174-2004, ACS, CE	Clack	Domestic

CLACK VALVE WS125TC

CONTROL VALVE

- Top mount control valve suited for automatic residential water softening or filtration system
- Single valve, available also for twin alternating, twin parallel and multitank systems
- Transformer, Drain Line Flow Control (DLFC) washer, Top Distributor and accessories not included, to order separetely
- More informative 4 digit LCD Display with Status Indicators
- Solid state microprocessor with easy access front panel setting
- Front panel display for time of day, days until next regeneration
- Days between regeneration feature: 1–99 days standard; 7-day optional
- Double backwash feature offers optimum regeneration, cleaning ability and efficiency
- 10 selectable pre-programmed regeneration cycles
- Coin Cell Lithium battery back-up with a 8 hour carry over
- Auto detection of 50/60 Hz line frequency, with automatic 12/24 hour time keeping formats
- Level VI 15-volt output DC power supply provides safe and easy installation
- Post treated water regenerant refil
- Reliable and proven DC drive
- Certified to NSF/ANSI 44, 61 and 372

Ref	Description	Fam.	Subfam.		
V125TCDTE-08	WS125TC VALVE DN T I-E	15	750		
V125TCDTE-M08	WS125TC VALVE DN T I-E W/MIXING VALVE	15	750		
V125TCDTF-08	WS125TC VALVE DN T I-F	15	750		
V125TCDTF-M08	WS125TC VALVE DN T I-F W/MIXING VALVE	15	750		
V125TCDTG-08	WS125TC VALVE DN T I-G	15	750		
V125TCDTG-M08	WS125TC VALVE DN T I-G W/MIXING VALVE	15	750		
V125TCBTZ-08	WS125TC VALVE BW T I-Z	15	750		

Ref	Softening System/Filter	Ø Injector Tank Size	Downflow/Upflow	Meter	Mixing Valve
V125TCDTE-08	Softening System	10"	Downflow	Not included	Not included
V125TCDTE-M08	Softening System	10"	Downflow	Not included	included
V125TCDTF-08	Softening System	12"	Downflow	Not included	Not included
V125TCDTF-M08	Softening System	12"	Downflow	Not included	included
V125TCDTG-08	Softening System	13"	Downflow	Not included	Not included
V125TCDTG-M08	Softening System	13"	Downflow	Not included	included
V125TCBTZ-08	Filter	N/A	Backwash	Not included	Not included

NOTE:Controls listed are priced without a power cord or transformer. For AC Adapter (Transformer) selection see “ACCESSORIES” section (V3186-XX).Drain Line Flow Controls (DLFC) washer is not included. Please order separately: reference order number V3162-007 through V3162-100.32 mm Top Distributor is not included. Please order separately: reference order number V-D1203-03.

Box: WxLxH	Box: Q.ty	Box: Weight	Pallet: WxLxH	Pallet: Q.ty	Pallet: Weight
	2			96	

Certificates	Manufacturer	Sectors
DM174-2004, ACS, CE	Clack	Domestic

CLACK VALVE WS125TC

SPECIFIC		FLOW RATES	
Inlet/Outlet Fittings (to order separately)	1" to 1,5" male BSPT	Service Δp15 psi drop	34 gpm
Cycles	6	Backwash Δp 25 psi drop	32 gpm
Valve Material	Noryl or equivalent	Cv Service	8,8
Regeneration	Downflow	Cv Backwash	6,4

OPERATING PRESSURES		TEMPERATURA DI ESERCIZIO	
Minimum/Maximum	20 psi – 125 psi	Minimum/Maximum	4° ÷ 43° C

Distributor Pilot	32 mm OD Piple
Drain Line	¾” or 1” NPT
Brine Line	3/8” or ½” OD Poly Tube
Mounting Base	2½" 8 NPSM
Distributor tube length above pressure vessel	+6 / - 13 mm
Weight	2 kg

ELECTRICAL SPECIFICATIONS		TANK APPLICATIONS	
Supply Voltage	da 200V AC a 240V AC	Water Softener	6" ÷ 21" diameter
Supply Frequency	50/60 Hz	Water Filter	6" ÷ 24" diameter
Output Voltage	15VDC		
Output Current	500 mA		

CYCLES OF OPERATION (Softener Downflow)	
Backwash 1st(upflow)	3 ÷ 12 minutes
Regenerate Draw/Slow Rinse (downflow)	50 ÷ 70 minutes
Backwash 2nd (upflow)	3 ÷ 12 minutes
Fast Rinse (downflow)	3 ÷ 8 minutes
Regenerant Refill (in service with treated water)	As Programmed
Service (downflow)	

Options: Backwash Filter, Bypass, Weather Cover

Compatible with the following typical concentration of regenerants or chemicals: Sodium chloride, potassium chloride, potassium permanganate, sodium bisulfite, chlorine and chloramines

CLACK VALVE WS125EI

CONTROL VALVE

- Top mount control valve suited for automatic residential water softening or filtration system
- Single valve, available also for twin alternating, twin parallel and multitank systems
- Transformer, Drain Line Flow Control (DLFC) washer, Top Distributor and accessories not included, to order separetely
- Solid state microprocessor with easy access front panel setting.
- Front panel display for time of day, days until next regeneration, volume remaining, current flow rate and total volume used (Totalizer)
- Four methods to initiate regeneration; meter immediate, meter delayed, time clock delayed or pressure differential
- Optional double backwash feature offers optimum regeneration, cleaning ability and efficiency
- Fully adjustable cycle times with 6-cycle control delivers controlled backwash, downflow brining/slow rinse, second backwash, fast rinse, refill and downflow service
- Coin Cell Lithium battery back-up with an 8 hour carry over
- Level VI 15-volt output DC power supply provides safe and easy installation
- Control valve design provides optimum service and backwash rates
- Post treated water regenerant refill
- Certified to NSF/ANSI 44, 61 and 372

Ref	Description	Fam.	Subfam.		
V125EIDME-08	WS125EI VALVE DN M I-E	15	740		
V125EIDME-M08	WS125EI VALVE DN M I-E W/MIXING VALVE	15	740		
V125EIDMF-08	WS125EI VALVE DN M I-F	15	740		
V125EIDMF-M08	WS125EI VALVE DN M I-F W/MIXING VALVE	15	740		
V125EIDMH-08	WS125EI VALVE DN M I-H	15	740		
V125EIDMH-M08	WS125EI VALVE DN M I-H W/MIXING VALVE	15	740		
V125EIDMI-08	WS125EI VALVE DN M I-I	15	740		
V125EIDMI-M08	WS125EI VALVE DN M I-I W/MIXING VALVE	15	740		
V125EIDMK-08	WS125EI VALVE DN M I-K	15	740		
V125EIDMK-M08	WS125EI VALVE DN M I-K W/MIXING VALVE	15	740		
V125EIUMD-08	WS125EI VALVE UP M I-D	15	740		
V125EIUMD-M08	WS125EI VALVE UP M I-D W/MIXING VALVE	15	740		
V125EIUMF-08	WS125EI VALVE UP M I-F	15	740		
V125EIUMF-M08	WS125EI VALVE UP M I-F W/MIXING VALVE	15	740		
V125EIDTF-08	WS125EI VALVE DN T I-F	15	740		
V125EIDTF-M08	WS125EI VALVE DN T I-F W/MIXING VALVE	15	740		
V125EIBMZ-08	WS125EI VALVE BW M I-Z	15	740		
V125EIBTZ-08	WS125EI VALVE BW T I-Z	15	740		

CLACK VALVE WS125EI

Ref	Softening System/Filter	Ø Injector Tank Size	Downflow/Upflow	Meter	Mixing Valve
V125EIDME-08	Softening System	10"	Downflow	included	Not included
V125EIDME-M08	Softening System	10"	Downflow	included	included
V125EIDMF-08	Softening System	12"	Downflow	included	Not included
V125EIDMF-M08	Softening System	12"	Downflow	included	included
V125EIDMH-08	Softening System	14"	Downflow	included	Not included
V125EIDMH-M08	Softening System	14"	Downflow	included	included
V125EIDMI-08	Softening System	16"	Downflow	included	Not included
V125EIDMI-M08	Softening System	16"	Downflow	included	included
V125EIDMK-08	Softening System	21"	Downflow	included	Not included
V125EIDMK-M08	Softening System	21"	Downflow	included	included
V125EIUMD-08	Softening System	12"	Upflow	included	Not included
V125EIUMD-M08	Softening System	12"	Upflow	included	included
V125EIUMF-08	Softening System	14"	Upflow	included	Not included
V125EIUMF-M08	Softening System	14"	Upflow	included	included
V125EIDTF-08	Softening System	12"	Downflow	Not included	Not included
V125EIDTF-M08	Softening System	12"	Downflow	Not included	included
V125EIBMZ-08	Filter	N/A	Backwash	included	Not included
V125EIBTZ-08	Filter	N/A	Backwash	Not included	Not included

NOTA:Controls listed are priced without a power cord or transformer. For AC Adapter (Transformer) selection see “ACCESSORIES” section (V3186-XX). Drain Line Flow Controls (DLFC) washer is not included. Please order separately: reference order number V3162-007 through V3162-100. 32 mm Top Distributor is not included. Please order separately: reference order number V-D1203-03.

Box: WxLxH	Box: Q.ty	Box: Weight	Pallet: WxLxH	Pallet: Q.ty	Pallet: Weight
	2			96	

Certificates	Manufacturer	Sectors
DM174-2004, ACS, CE	Clack	Domestic

CLACK VALVE WS125EI

SPECIFIC		FLOW RATES	
Inlet/Outlet Fittings (to order separately)	1" to 1,5" masle BSPT	Service Δp15 psi/1 bar drop (includes meter)	7,7 m³/h
Cycles	up to 6	Backwash con Δp25 psi/1.7 bar drop	7,3 m³/h
Valve Material	Noryl or equivalent	CV Service	8,8
Regeneration	Downflow or Upflow	CV Backwash	6,4

OPERATING PRESSURES		OPERATING TEMPERATURES	
Minimum/Maximum	1,4 ÷ 8,6 bar	Minimum/Maximum	4° ÷ 43° C

METER			
Accuracy	± 5%	Distributor Pilot	32 mm OD Pipe
Flow Rate Range	0,95 ÷ 129 lpm	Drain Line	¾” or 1” NPT
Volume Range	0,02 ÷ 5.700 m³	Brine Line	3/8” or ½” OD Poly Tube
Totalizer	0,001 - 9.999.000 m³	Mounting Base	2½" 8 NPSM
		Distributor tube length above pressure vessel	+6 / -13 mm
		Weight	2 kg

ELECTRICAL SPECIFICATIONS		TANK APPLICATIONS	
Supply Voltage	200V AC to 240V AC	Water Softener	6" ÷ 21" diameter
Supply Frequency	50/60 Hz	Water Filter	6" ÷ 24" diameter
Output Voltage	15VDC		
Output Current	500 mA		

CYCLES OF OPERATION	
Backwash 1st (upflow)	1 ÷ 95 minutes
Regenerate Draw/Slow Rinse (downflow)	1 ÷ 180 minutes
Backwash 2nd (upflow)	1 ÷ 95 minutes
Fast Rinse (downflow)	1 ÷ 95 minutes
Regenerant Refill (in service with treated water)	0,1 ÷ 99 minutes
Service (downflow)	

Options: Backwash Filter, Weather Cover

Compatible with the following typical concentrations of regenerants or chemicals: Sodium chloride, potassium chloride, potassium permanganate, sodium bisulfite, chlorine and chloramines

CLACK VALVE WS125CI

CONTROL VALVE

- Top mount control valve suited for automatic residential water softening or filtration system
- Single valve, available also for twin alternating, twin parallel and multitank systems
- Transformer, Drain Line Flow Control (DLFC) washer, Top Distributor and accessories not included, to order separetely
- Solid state microprocessor with easy access front panel settings.
- Four methods to initiate regeneration; meter immediate, meter delayed, time clock delayed or pressure differential
- Program in ppm, French degrees, German degrees, or cubic meters
- Fully programmable regeneration cycle sequence (maximum 9)
- Programmable regeneration cycle times
- Days override feature; 1 – 28 days available
- Stores system configuration and operation data in nonvolatile memory
- Coin Cell Lithium battery back-up with a 24 hour carry over
- Level VI 15-volt output DC power supply provides safe and easy installation
- Control valve design provides optimum service and backwash rates
- Pre or Post treated water regenerant refill
- Mixing valve option available
- Low salt alarm
- 24-hour clock
- Reliable and proven DC drive
- Certified to NSF/ANSI 44, 61 and 37

Ref	Description	Fam.	Subfam.		
V125CIDME-08	WS125CI VALVE DN M I-E	15	730		
V125CIDME-M08	WS125CI VALVE DN M I-E W/MIXING VALVE	15	730		
V125CIDMF-08	WS125CI VALVE DN M I-F	15	730		
V125CIDMF-M08	WS125CI VALVE DN M I-F W/MIXING VALVE	15	730		
V125CIDMH-08	WS125CI VALVE DN M I-H	15	730		
V125CIDMH-M08	WS125CI VALVE DN M I-H W/MIXING VALVE	15	730		
V125CIDMI-08	WS125CI VALVE DN M I-I	15	730		
V125CIDMI-M08	WS125CI VALVE DN M I-I W/MIXING VALVE	15	730		
V125CIDMK-08	WS125CI VALVE DN M I-K	15	730		
V125CIDMK-M08	WS125CI VALVE DN M I-K W/MIXING VALVE	15	730		
V125CIUMD-08	WS125CI VALVE UP M I-D	15	730		
V125CIUMD-M08	WS125CI VALVE UP M I-D W/MIXING VALVE	15	730		
V125CIUMF-08	WS125CI VALVE UP M I-F	15	730		
V125CIUMF-M08	WS125CI VALVE UP M I-F W/MIXING VALVE	15	730		
V125CIDTF-08	WS125CI VALVE DN T I-F	15	730		
V125CIDTF-M08	WS125CI VALVE DN T I-F W/MIXING VALVE	15	730		
V125CIBMZ-08	WS125CI VALVE BW M I-Z	15	730		
V125CIBTZ-08	WS125CI VALVE BW T I-Z	15	730		

CLACK VALVE WS125CI

Ref	Softening System/Filter	Ø Injector Tank Size	Downflow/Upflow	Meter	Mixing Valve
V125CIDME-08	Softening System	10"	Downflow	included	Not included
V125CIDME-M08	Softening System	10"	Downflow	included	included
V125CIDMF-08	Softening System	12"	Downflow	included	Not included
V125CIDMF-M08	Softening System	12"	Downflow	included	included
V125CIDMH-08	Softening System	14"	Downflow	included	Not included
V125CIDMH-M08	Softening System	14"	Downflow	included	included
V125CIDMI-08	Softening System	16"	Downflow	included	Not included
V125CIDMI-M08	Softening System	16"	Downflow	included	included
V125CIDMK-08	Softening System	21"	Downflow	included	Not included
V125CIDMK-M08	Softening System	21"	Downflow	included	included
V125CIUMD-08	Softening System	12"	Upflow	included	Not included
V125CIUMD-M08	Softening System	12"	Upflow	included	included
V125CIUMF-08	Softening System	14"	Upflow	included	Not included
V125CIUMF-M08	Softening System	14"	Upflow	included	included
V125CIDTF-08	Softening System	12"	Downflow	Not included	Not included
V125CIDTF-M08	Softening System	12"	Downflow	Not included	included
V125CIBMZ-08	Filter	N/A	Backwash	included	Not included
V125CIBTZ-08	Filter	N/A	Backwash	Not included	Not included

NOTE:Controls listed are priced without a power cord or transformer. For AC Adapter (Transformer) selection see “ACCESSORIES” section (V3186-XX). Drain Line Flow Controls (DLFC) washer is not included. Please order separately: reference order number V3162-007 through V3162-100. 32 mm Top Distributor is not included. Please order separately: reference order number V-D1203-03.

Box: WxLxH	Box: Q.ty	Box: Weight	Pallet: WxLxH	Pallet: Q.ty	Pallet: Weight
	2			96	

Certificates	Manufacturer	Sectors
DM174-2004, ACS, CE	Clack	Domestic

CLACK VALVE WS125CI

SPECIFIC		FLOW RATES	
Inlet/Outlet Fittings (to order separately)	Da 1" a 1,5" male BSPT	Service Δp 15 psi/1 bar drop (includes meter)	7,7 m³/h
Cycles	Up to 9	Backwash Δp 25 psi/1.7 bar drop	7,3 m³/h
Valve Material	Noryl or equivalent	CV Service	8,8
Regeneration	Downflow or Upflow	CV Backwash	6,4

OPERATING PRESSURES		OPERATING TEMPERATURES	
Minimum/Maximum	1,4 ÷ 8,6 bar	Minimum/Maximum	4° ÷ 43° C

METER			
Accuracy	± 5%	Distributor Pilot	32 mm OD Pipe
Flow Rate Range.	0,95 ÷ 129 lpm	Drain Line	¾" or 1" NPT
Volume Range	0,02 ÷ 5.700 m³	Brine Line	3/8" or ½" OD Poly Tube
Totalizer	1 - 99.999 m³	Mounting Base	2½" 8 NPSM
		Distributor tube length above pressure vessel	+6 / -13 mm
		Weight	2 kg

ELECTRICAL SPECIFICATIONS		TANK APPLICATIONS	
Supply Voltage	200V AC to 240V AC	Water Softener	6" ÷ 21" diameter
Supply Frequency	50/60 Hz	Water Filter	6" ÷ 24" diameter
Output Voltage	15VDC		
Output Current	500 mA		

CYCLES OF OPERATION Choose up to nine regeneration cycles, in any order, with a wide range of available values:	
Backwash	1 ÷ 120 minutes
Rinse	1 ÷ 120 minutes
Pause (service)	1 ÷ 480 minutes
Brine (co-current)	1 ÷ 180 minutes
Brine (counter-current)	1 ÷ 180 minutes
Refill (softener)	0,05 ÷ 90,00 kg
Refill (filter)	0,2 ÷ 76,0 liters

Options: Backwash Filter, Bypass, Weather Cover

Compatible with the following typical concentrations of regenerants or chemicals: Sodium chloride, potassium chloride, potassium permanganate, sodium bisulfite, chlorine and chloramines

CLACK VALVE WS15EI P

CONTROL VALVE

- Transformer, Drain Line Flow Control (DLFC) washer, Top Distributor and accessories not included, to order separetely;
- 1.5” top mount control valve suited for mid-size commercial/industrial applications;
- Valve body in Noryl plastic material or equivalent;
- Economical optional meter;
- Solid state microprocessor with easy access front panel settings;
- Front panel display for time of day, days until next regeneration, volume remaining, current flow rate and total volume used (Totalizer);
- Four methods to initiate regeneration; meter immediate, meter delayed, time clock delayed or pressure differential;
- Optional double backwash feature offers optimum regeneration, cleaning ability and efficiency;
- Fully adjustable cycle times with 6-cycle control delivers controlled backwash, downflow brining or upflow brining, slow rinse, second backwash, fast rinse, refill and downflow service;
- Coin Cell Lithium battery back-up with a 8 hour carry over;
- Level VI 15-volt output DC power supply provides safe and easy installation;
- Post treated water regenerant refil;
- 24 hour clock;
- Reliable and proven DC drive;
- Certified to NSF/ANSI 44, 61 and 372;
- If you need a different size of tank, please order separately the specific injector.

Ref	Description	Fam.	Subfam.		
VP15EIDTG-05	WS15EI PLASTIC VALVE DN T I-G	25	811		
VP15EIBTZ-05	WS15EI PLASTIC VALVE BW T I-Z	25	811		

Certificates	Manufacturer	Sectors

Ref	Softening System/Filter	Ø Injector Tank Size	Downflow/Upflow	Meter	Mixing Valve
VP15CIDTG-05	Softening System	21"	Downflow	Not included	Not included
VP15CIBTZ-05	Filter	N/A	Backwash	Not included	Not included

NOTE:Controls listed are priced without a power cord or transformer. For AC Adapter (Transformer) selection see “ACCESSORIES” section (V3186-XX). Drain Line Flow Controls (DLFC) washer is not included. Please order separately. For 3/4” drain fitting (V3158-04), Flow rates 0.07 - 10.0 gpm: reference order numbers V3162-007 through V3162-100. For 1” drain fitting (V3008-05), Flow rates 9.0 - 25.0 gpm: reference order numbers V3190-090 through V3190-250. For 1.25” x 1.5” drain fittings (V3079BSPT), Flow rates 9 to 85 gpm: reference order numbers V3162-007 through V3162-100, and V3190-090 through V3190-250. 50 mm Top Distributor is not included. Please order separately: reference order number V-D1199-04.

Box: WxLxH	Box: Q.ty	Box: Weight	Pallet: WxLxH	Pallet: Q.ty	Pallet: Weight
	1				

Certificates	Manufacturer	Sectors
DM174-2004 ACS CE	Clack	Commercial, Industrial

Specific accessories

Ref	Description	Fam.	Subfam.		
V3045BSPT	WS15P METER ASSEMBLY BSPT 28″ METER CABLE	25	850		
V3045BSPT-15	WS15P METER ASSEMBLY BSPT 15´ METER CABLE	25	850		
V3034	WS15 PLASTIC MOTORIZED ALTERNATING VALVE	25	850		
V3035	WS15 PLASTIC NO HARD WATER BYPASS VALVE	25	850		
V4430-02	WS15P FITTING ASSEMBLY QC TO BSPT	25	850		
V4430-03	WS15P FITTING ASSEMBLY QC TO QC	25	850		
V4430-08	WS15P FITTING ASSEMBLY QC TO BSPT ELBOW	25	850		
V4430-09	WS15P FITTING ASSEMBLY QC TO QC ELBOW	25	850		
V4430-04BSPT	WS1.5 PLASTIC DRAIN ELBOW & DLFC RETAINER	25	860		
V4350-15Z	WS1.5 PLASTIC INJECTOR FEED PLUG	25	860		

CLACK VALVE WS15EI P

SPECIFIC		CONTROL VALVE FLOW RATES	
Inlet/Outlet	1,5" female BSPT	Service Δp 1 bar/15 psi drop (includes meter)	13,6 m³/h
Cycles	up to 6	Backwash Δp 1.7/25 psi bar drop	9,8 m³/h
Valve Material	Noryl or equivalent		
Regeneration	Downflow or Upflow		

OPERATING PRESSURES		OPERATING TEMPERATURES	
Minimum/Maximum	1,4 ÷ 8,6 bar	Minimum/Maximum	4° ÷ 43° C

METER SPECIFICATIONS			
Accuracy	± 5%	Distributor Pilot	50 mm
Flow Rate Range	2 ÷ 248 lpm	Drain Line Connection Adapter Included	1.25” Female NPT 3⁄4" Male NPT Elbow
Volume Range	0,02 ÷ 5.700 m³	Brine Line Connection Adapter Included	¾” Female NPT ½” OD Poly Tube Compression
Totalizer	0,001 - 4.294..000 m³	Mounting Base	4" - 8 UN
		Distributor tube length above pressure vessel	+/- 13 mm
		Shipping Weight With Meter	4,1 kg

ELECTRICAL SPECIFICATIONS		TANK APPLICATIONS	
Supply Voltage	200V AC to 240V AC	Water Softener	12" ÷ 30" diameter
Supply Frequency	50/60 Hz	Water Filter	12" ÷ 30" diameter
Output Voltage	15VDC		
Output Current	500 mA		

CYCLES OF OPERATION	
Backwash 1st (upflow)	1 ÷ 95 minutes - Backwash 1-9
Regenerate Draw/Slow Rinse (downflow)	1 ÷ 180 minutes - Rinse 1-9
Backwash 2nd (upflow)	1 ÷ 95 minutes
Fast Rinse (downflow)	1 ÷ 95 minutes
Regenerant Refill (in service with treated water)	0,1 ÷ 99 minutes
Service (downflow)	

Options: Backwash Filter, Weather Cover

Compatible with the following typical concentrations of regenerants or chemicals: Sodium chloride, potassium chloride, potassium permanganate, sodium bisulfite, chlorine and chloramines.

CLACK VALVE WS15CI P

CONTROL VALVE

- Transformer, Drain Line Flow Control (DLFC) washer, Top Distributor and accessories not included, to order separetely;
- 1.5” top mount control valve suited for mid-size commercial/industrial applications;
- Valve body in Noryl plastic material or equivalent;
- Economical optional meter;
- Solid state microprocessor with easy access front panel settings;
- Front panel display for time of day, days until next regeneration, volume remaining, current flow rate and total volume used (Totalizer);
- Four methods to initiate regeneration; meter immediate, meter delayed, time clock delayed or pressure differential;
- Optional double backwash feature offers optimum regeneration, cleaning ability and efficiency;
- Fully adjustable cycle times with 6-cycle control delivers controlled backwash, downflow brining or upflow brining, slow rinse, second backwash, fast rinse, refill and downflow service;
- Coin Cell Lithium battery back-up with a 8 hour carry over;
- Level VI 15-volt output DC power supply provides safe and easy installation;
- Post treated water regenerant refil;
- 24 hour clock;
- Reliable and proven DC drive;
- Certified to NSF/ANSI 44, 61 and 372;
- If you need a different size of tank, please order separately the specific injector.

Ref	Description	Fam.	Subfam.		
VP15CIDTG-05	WS15CI PLASTIC VALVE DN T I-G	25	801		
VP15CIBTZ-05	WS15CI PLASTIC VALVE BW T I-Z	25	800		

Certificates	Manufacturer	Sectors

Ref	Softening System/Filter	Ø Injector Tank Size	Downflow/Upflow	Meter	Mixing Valve
VP15CIDTG-05	Softening System	21"	Downflow	Not included	Not included
VP15CIBTZ-05	Filter	N/A	Backwash	Not included	Not included

NOTE:Controls listed are priced without a power cord or transformer. For AC Adapter (Transformer) selection see “ACCESSORIES” section (V3186-XX). Drain Line Flow Controls (DLFC) washer is not included. Please order separately. For 3/4” drain fitting (V3158-04), Flow rates 0.07 - 10.0 gpm: reference order numbers V3162-007 through V3162-100. For 1” drain fitting (V3008-05), Flow rates 9.0 - 25.0 gpm: reference order numbers V3190-090 through V3190-250. For 1.25” x 1.5” drain fittings (V3079BSPT), Flow rates 9 to 85 gpm: reference order numbers V3162-007 through V3162-100, and V3190-090 through V3190-250. 50 mm Top Distributor is not included. Please order separately: reference order number V-D1199-04.

Box: WxLxH	Box: Q.ty	Box: Weight	Pallet: WxLxH	Pallet: Q.ty	Pallet: Weight
	1				

Specific accessories

Ref	Description	Fam.	Subfam.		
V3045BSPT	WS15P METER ASSEMBLY BSPT 28″ METER CABLE	25	850		
V3045BSPT-15	WS15P METER ASSEMBLY BSPT 15´ METER CABLE	25	850		
V3034	WS15 PLASTIC MOTORIZED ALTERNATING VALVE	25	850		
V3035	WS15 PLASTIC NO HARD WATER BYPASS VALVE	25	850		
V4430-02	WS15P FITTING ASSEMBLY QC TO BSPT	25	850		
V4430-03	WS15P FITTING ASSEMBLY QC TO QC	25	850		
V4430-08	WS15P FITTING ASSEMBLY QC TO BSPT ELBOW	25	850		
V4430-09	WS15P FITTING ASSEMBLY QC TO QC ELBOW	25	850		
V4430-04BSPT	WS1.5 PLASTIC DRAIN ELBOW & DLFC RETAINER	25	860		
V4350-15Z	WS1.5 PLASTIC INJECTOR FEED PLUG	25	860		

CLACK VALVE WS15CI P

SPECIFIC		CONTROL VALVE FLOW RATES	
Inlet/Outlet	1,5" female BSPT	Service Δp 1 bar/15 psi drop (includes meter)	13,6 m³/h
Cycles	up to 6	Backwash Δp 1.7/25 psi bar drop	9,8 m³/h
Valve Material	Noryl or equivalent		
Regeneration	Downflow or Upflow		

OPERATING PRESSURES		OPERATING TEMPERATURES	
Minimum/Maximum	1,4 ÷ 8,6 bar	Minimum/Maximum	4° ÷ 43° C

METER SPECIFICATIONS			
Accuracy	± 5%	Distributor Pilot	50 mm
Flow Rate Range	2 ÷ 248 lpm	Drain Line Connection Adapter Included	1.25” Female NPT 3⁄4" Male NPT Elbow
Volume Range	0,02 ÷ 5.700 m³	Brine Line Connection Adapter Included	¾” Female NPT ½” OD Poly Tube Compression
Totalizer	0,001 - 4.294..000 m³	Mounting Base	4" - 8 UN
		Distributor tube length above pressure vessel	+/- 13 mm
		Shipping Weight With Meter	4,1 kg

ELECTRICAL SPECIFICATIONS		TANK APPLICATIONS	
Supply Voltage	200V AC to 240V AC	Water Softener	12" ÷ 30" diameter
Supply Frequency	50/60 Hz	Water Filter	12" ÷ 30" diameter
Output Voltage	15VDC		
Output Current	500 mA		

CYCLES OF OPERATION	
Backwash 1st (upflow)	1 ÷ 95 minutes - Backwash 1-9
Regenerate Draw/Slow Rinse (downflow)	1 ÷ 180 minutes - Rinse 1-9
Backwash 2nd (upflow)	1 ÷ 95 minutes
Fast Rinse (downflow)	1 ÷ 95 minutes
Regenerant Refill (in service with treated water)	0,1 ÷ 99 minutes
Service (downflow)	

Options: Backwash Filter, Weather Cover

Compatible with the following typical concentrations of regenerants or chemicals: Sodium chloride, potassium chloride, potassium permanganate, sodium bisulfite, chlorine and chloramines.

CLACK VALVE WS15EI

CONTROL VALVE

- Transformer, Drain Line Flow Control (DLFC) washer, Top Distributor and accessories not included, to order separetely
- 1.5” top mount control valve suited for mid-size commercial/industrial applications
- Epoxy coated lead free brass valve body;
- Economical optional meter
- Solid state microprocessor with easy access front panel settings
- Front panel display for time of day, days until next regeneration, volume remaining, current flow rate and total volume used (Totalizer)
- Four methods to initiate regeneration; meter immediate, meter delayed, time clock delayed or pressure differential
- Optional double backwash feature offers optimum regeneration, cleaning ability and efficiency;
- Fully adjustable cycle times with 6-cycle control delivers controlled backwash, downflow brining or upflow brining, slow rinse, second backwash, fast rinse, refill and downflow service;
- Coin Cell Lithium battery back-up with a 8 hour carry over
- Level VI 15-volt output DC power supply provides safe and easy installation
- Post treated water regenerant refil
- 24 hour clock
- Reliable and proven DC drive
- Certified to NSF/ANSI 44, 61 and 372

Ref	Description	Fam.	Subfam.		
V15EIDMB-05	WS15EI VALVE DN M I-B	25	810		
V15EIDMD-05	WS15EI VALVE DN M I-D	25	810		
V15EIDMF-05	WS15EI VALVE DN M I-F	25	810		
V15EIDMG-05	WS15EI VALVE DN M I-G	25	810		
V15EIUMB-05	WS15EI VALVE UP M I-B	25	810		
V15EIUMD-05	WS15EI VALVE UP M I-D	25	810		
V15EIDTD-05	WS15EI VALVE DN T I-D	25	810		
V15EIDTF-05	WS15EI VALVE DN T I-F	25	810		
V15EIDTG-05	WS15EI VALVE DN T I-G	25	810		
V15EIBMZ-05	WS15EI VALVE BW M I-Z	25	810		
V15EIBTZ-05	WS15EI VALVE BW T I-Z	25	810		

CLACK VALVE WS15EI

Ref	Softening System/Filter	Ø Injector Tank Size	Downflow/Upflow	Meter	Mixing Valve
V15EIDMB-05	Softening System	12"	Downflow	included	Not included
V15EIDMD-05	Softening System	14"	Downflow	included	Not included
V15EIDMF-05	Softening System	18"	Downflow	included	Not included
V15EIDMG-05	Softening System	21"	Downflow	included	Not included
V15EIUMB-05	Softening System	14"	Upflow	included	Not included
V15EIUMD-05	Softening System	18"	Upflow	included	Not included
V15EIDTD-05	Softening System	14"	Downflow	Not included	Not included
V15EIDTF-05	Softening System	18"	Downflow	Not included	Not included
V15EIDTG-05	Softening System	21"	Downflow	Not included	Not included
V15EIBMZ-05	Filter	N/A	Backwash	included	Not included
V15EIBTZ-05	Filter	N/A	Backwash	Not included	Not included

NOTE:Controls listed are priced without a power cord or transformer. For AC Adapter (Transformer) selection see “ACCESSORIES” section (V3186-XX). Drain Line Flow Controls (DLFC) washer is not included. Please order separately. For 3/4” drain fitting (V3158-04), Flow rates 0.07 - 10.0 gpm: reference order numbers V3162-007 through V3162-100. For 1” drain fitting (V3008-05), Flow rates 9.0 - 25.0 gpm: reference order numbers V3190-090 through V3190-250. For 1.25” x 1.5” drain fittings (V3079BSPT), Flow rates 9 to 85 gpm: reference order numbers V3162-007 through V3162-100, and V3190-090 through V3190-250. 50 mm Top Distributor is not included. Please order separately: reference order numbers V-D1199-04 or V-D1300.

Box: WxLxH	Box: Q.ty	Box: Weight	Pallet: WxLxH	Pallet: Q.ty	Pallet: Weight
	1				

Certificates	Manufacturer	Sectors
DM174-2004, ACS CE	Clack	Commercial, Industrial

CLACK VALVE WS15EI

SPECIFIC		CONTROL VALVE FLOW RATES	
Inlet/Outlet	1,5" female BSPT	Service Δp 1 bar/15 psi drop (includes meter)	15,9m³/h
Cycles	up to 6	Backwash Δp 1.7/25 psi bar drop	11,8m³/h
Valve Material	Lead free brass		
Regeneration	Downflow or Upflow		

OPERATING PRESSURES		OPERATING TEMPERATURES	
Minimum/Maximum	1,4 ÷ 8,6 bar	Minimum/Maximum	4° ÷ 43° C

METER SPECIFICATIONS			
Accuracy	± 5%	Distributor Pilot	50 mm
Flow Rate Range	2 ÷ 248 lpm	Drain Line Connection Adapter Included	1.25” Female NPT 3⁄4" Male NPT Elbow
Volume Range	0,02 ÷ 5.700 m³	Brine Line Connection Adapter Included	¾” Female NPT ½” OD Poly Tube Compression
Totalizer	0,001 - 4.294..000 m³	Mounting Base	4" - 8 UN
		Distributor tube length above pressure vessel	+/- 13 mm
		Shipping Weight With Meter	9,5 kg

ELECTRICAL SPECIFICATIONS		TANK APPLICATIONS	
Supply Voltage	200V AC to 240V AC	Water Softener	12" ÷ 30" diameter
Supply Frequency	50/60 Hz	Water Filter	12" ÷ 30" diameter
Output Voltage	15VDC		
Output Current	500 mA		

CYCLES OF OPERATION	
Backwash 1st (upflow)	1 ÷ 95 minutes - Backwash 1-9
Regenerate Draw/Slow Rinse (downflow)	1 ÷ 180 minutes - Rinse 1-9
Backwash 2nd (upflow)	1 ÷ 95 minutes
Fast Rinse (downflow)	1 ÷ 95 minutes
Regenerant Refill (in service with treated water)	0,1 ÷ 99 minutes
Service (downflow)	

Options: Backwash Filter, Weather Cover

Compatible with the following typical concentrations of regenerants or chemicals: Sodium chloride, potassium chloride, potassium permanganate, sodium bisulfite, chlorine and chloramines.

CLACK VALVE WS15CI

CONTROL VALVE

- Transformer, Drain Line Flow Control (DLFC) washer, Top Distributor and accessories not included, to order separetely
- 1.5” top mount control valve suited for mid-size commercial/industrial applications
- Epoxy coated lead free brass valve body;
- Economical stainless steel optional meter assembly
- Solid state microprocessor with easy access front panel settings
- Front panel display for time of day, days until next regeneration, volume remaining and current flow
- Four methods to initiate the downflow regeneration; meter immediate, meter delayed, time clock delayed or pressure differential
- Program in ppm, French degrees, German degrees, or cubic meters
- Fully programmable regeneration cycle sequence (maximum 9)
- Programmable regeneration cycle times
- Days override feature; 1-28 days available
- Level VI 15-volt output DC power supply provides safe and easy installation
- Pre or Post treated water regenerant refill;
- Low salt alarm
- 24 hour clock
- Coin Cell Lithium battery back-up with a 24 hour carry over
- Reliable and proven DC drive
- Certified to NSF/ANSI 44, 61 and 372

Ref	Description	Fam.	Subfam.		
V15CIDMB-05	WS15CI VALVE DN M I-B	25	800		
V15CIDMD-05	WS15CI VALVE DN M I-D	25	800		
V15CIDMF-05	WS15CI VALVE DN M I-F	25	800		
V15CIDMG-05	WS15CI VALVE DN M I-G	25	800		
V15CIUMB-05	WS15CI VALVE UP M I-B	25	800		
V15CIUMD-05	WS15CI VALVE UP M I-D	25	800		
V15CIDTD-05	WS15CI VALVE DN T I-D	25	800		
V15CIDTF-05	WS15CI VALVE DN T I-F	25	800		
V15CIDTG-05	WS15CI VALVE DN T I-G	25	800		
V15CIBMZ-05	WS15CI VALVE BW M I-Z	25	800		
V15CIBTZ-05	WS15CI VALVE BW T I-Z	25	800		

CLACK VALVE W15CI

Ref	Softening System/Filter	Ø Injector Tank Size	Downflow/Upflow	Meter	Mixing Valve
V15CIDMB-05	Softening System	12"	Downflow	included	Not included
V15CIDMD-05	Softening System	14"	Downflow	included	Not included
V15CIDMF-05	Softening System	18"	Downflow	included	Not included
V15CIDMG-05	Softening System	21"	Downflow	included	Not included
V15CIUMB-05	Softening System	14"	Upflow	included	Not included
V15CIUMD-05	Softening System	18"	Upflow	included	Not included
V15CIDTD-05	Softening System	14"	Downflow	Not included	Not included
V15CIDTF-05	Softening System	18"	Downflow	Not included	Not included
V15CIDTG-05	Softening System	21"	Downflow	Not included	Not included
V15CIBMZ-05	Filter	N/A	Backwash	included	Not included
V15CIBTZ-05	Filter	N/A	Backwash	Not included	Not included

NOTE:Controls listed are priced without a power cord or transformer. For AC Adapter (Transformer) selection see “ACCESSORIES” section (V3186-XX). Drain Line Flow Controls (DLFC) washer is not included. Please order separately. For 3/4” drain fitting (V3158-04), Flow rates 0.07 - 10.0 gpm: reference order numbers V3162-007 through V3162-100. For 1” drain fitting (V3008-05), Flow rates 9.0 - 25.0 gpm: reference order numbers V3190-090 through V3190-250. For 1.25” x 1.5” drain fittings (V3079BSPT), Flow rates 9 to 85 gpm: reference order numbers V3162-007 through V3162-100, and V3190-090 through V3190-250. 50 mm Top Distributor is not included. Please order separately: reference order numbers V-D1199-04 or V-D1300.

Box: WxLxH	Box: Q.ty	Box: Weight	Pallet: WxLxH	Pallet: Q.ty	Pallet: Weight
	1				

Certificates	Manufacturer	Sectors
DM174-2004, ACS, CE	Clack	Commercial, Industrial

CLACK VALVE WS15CI

SPECIFIC		CONTROL VALVE FLOW RATES	
Inlet/Outlet	1,5" female BSPT	Service Δp1 bar/15 psi drop (includes meter)	15,9 m³/h
Cycles	Up to 9	Backwash Δp 1.7 bar/25 psi drop	11,8 m³/h
Valve Material	Lead free brass		
Regeneration	Downflow or Upflow		

OPERATING PRESSURES		OPERATING TEMPERATURES	
Minimum/Maximum	1,4 ÷ 8,6 bar	Minimum/Maximum	4° ÷ 43° C

METER SPECIFICATIONS			
Accuracy	± 5%	Distributor Pilot	50 mm
Flow Rate Range	2 ÷ 248 lpm	Drain Line Connection Adapter Included.	1.25” Female NPT ¾" Male NPT Elbow
Volume Range	0,02 ÷ 5.700 m³	Brine Line Connection Adapter Included	¾” Female NPT ½” OD Poly Tube Compression
Totalizer	1 - 99.000 m³	Mounting Base	4" - 8 UN
		Distributor tube length above pressure vessel	+/- 13 mm
		Shipping Weight With Meter	9,5 kg

ELECTRICAL SPECIFICATIONS		TANK APPLICATIONS	
Supply Voltage	200V AC to 240V AC	Water Softener	12" ÷ 30" diameter
Supply Frequency	50/60 Hz	Water Filter	12" ÷ 30" diameter
Output Voltage	15VDC		
Output Current	500 mA		

CYCLES OF OPERATION Choose up to nine regeneration cycles, in any order, with a wide range of available values:	
Backwash	1 ÷ 120 minutes
Rinse	1 ÷ 480 minutes
Pause (service).	1 ÷ 180 minutes
Brine (co-current)	0,1 ÷ 180 minutes
Refill (softener)	0,05 ÷ 90,00 kg/.1 - 99 minutes
Refill (filter)	0,2 ÷ 76,0 liters

Options: Backwash Filter, Weather Cover

Compatible with the following typical concentrations of regenerants or chemicals: Sodium chloride, potassium chloride, potassium permanganate, sodium bisulfite, chlorine and chloramines.

CLACK VALVE WS2EI

CONTROL VALVE

- Transformer, Drain Line Flow Control (DLFC) washer, Top Distributor and accessories not included, to order separetely
- 2” Top mount control valve suited for commercial/industrial applications
- Epoxy coated lead free brass valve body.
- Economical stainless steel optional meter assembly
- Solid state microprocessor with easy access front panel setting
- Front panel display for time of day, days until next regeneration, volume remaining, current flow rate and total volume used (Totalizer)
- Four methods to initiate regeneration; meter immediate, meter delayed, time clock delayed or pressure differential
- Optional double backwash feature offers optimum regeneration, cleaning ability and efficiency
- Fully adjustable cycle times with 6-cycle control delivers controlled backwash, downflow brining or upflow brining, slow rinse, second backwash, fast rinse, refill and downflow servi
- Coin Cell Lithium battery back-up with an 8 hour carry over
- Level VI 15-volt output DC power supply provides safe and easy installation
- Post treatment water regenerant refill
- 24 Hour Clock
- Reliable and proven DC drive
- Certified to NSF/ANSI 44, 61 and 372

Ref	Description	Fam.	Subfam.		
V2EIDMA-05	WS2EI VALVE DN M I-A	25	830		
V2EIDMB-05	WS2EI VALVE DN M I-B	25	830		
V2EIDMC-05	WS2EI VALVE DN M I-C	25	830		
V2EIDMD-05	WS2EI VALVE DN M I-D	25	830		
V2EIDME-05	WS2EI VALVE DN M I-E	25	830		
V2EIDMF-05	WS2EI VALVE DN M I-F	25	830		
V2EIDMG-05	WS2EI VALVE DN M I-G	25	830		
V2EIUMA-05	WS2EI VALVE UP M I-A	25	830		
V2EIUMB-05	WS2EI VALVE UP M I-B	25	830		
V2EIDTA-05	WS2EI VALVE DN T I-A	25	830		
V2EIDTB-05	WS2EI VALVE DN T I-B	25	830		
V2EIDTC-05	WS2EI VALVE DN T I-C	25	830		
V2EIDTD-05	WS2EI VALVE DN T I-D	25	830		
V2EIDTE-05	WS2EI VALVE DN T I-E	25	830		
V2EIDTF-05	WS2EI VALVE DN T I-F	25	830		
V2EIDTG-05	WS2EI VALVE DN T I-G	25	830		
V2EIBMZ-05	WS2EI VALVE BW M I-Z	25	830		
V2EIBTZ-05	WS2EI VALVE BW T I-Z	25	830		

CLACK VALVE WS2EI

Ref	Softening System/Filter	Ø Bombola	Downflow/Upflow	Meter	Mixing Valve
V2EIDMA-05	Softening System	18"	Downflow	included	Not included
V2EIDMB-05	Softening System	21"	Downflow	included	Not included
V2EIDMC-05	Softening System	24"	Downflow	included	Not included
V2EIDMD-05	Softening System	30"	Downflow	included	Not included
V2EIDME-05	Softening System	36"	Downflow	included	Not included
V2EIDMF-05	Softening System	42"	Downflow	included	Not included
V2EIDMG-05	Softening System	48"	Downflow	included	Not included
V2EIUMA-05	Softening System	24"	Upflow	included	Not included
V2EIUMB-05	Softening System	30"	Upflow	included	Not included
V2EIDTA-05	Softening System	18"	Downflow	Not included	Not included
V2EIDTB-05	Softening System	21"	Downflow	Not included	Not included
V2EIDTC-05	Softening System	24"	Downflow	Not included	Not included
V2EIDTD-05	Softening System	30"	Downflow	Not included	Not included
V2EIDTE-05	Softening System	36"	Downflow	Not included	Not included
V2EIDTF-05	Softening System	42"	Downflow	Not included	Not included
V2EIDTG-05	Softening System	48"	Downflow	Not included	Not included
V2EIBMZ-05	Filter	N/A	Backwash	included	Not included
V2EIBTZ-05	Filter	N/A	Backwash	Not included	Not included

NOTE:Controls listed are priced without a power cord or transformer. For AC Adapter (Transformer) selection see “ACCESSORIES” section (V3186-XX). Drain Line Flow Controls (DLFC) washer is not included. Please order separately. For 3/4” drain fitting (V3158-04), Flow rates 0.07 - 10.0 gpm: reference order numbers V3162-007 through V3162-100. For 1” drain fitting (V3008-05), Flow rates 9.0 - 25.0 gpm: reference order numbers V3190-090 through V3190-250. For 1.5” x 1.5” drain fittings (V3080BSPT), Flow rates 9 to 85 gpm: reference order numbers V3162-007 through V3162-100, and V3190-090 through V3190-250. 50 mm Top Distributor is not included. Please order separately: reference order numbers V-D1199-04 or V-D1300.

Box: WxLxH	Box: Q.ty	Box: Weight	Pallet: WxLxH	Pallet: Q.ty	Pallet: Weight
	1				

Certificates	Manufacturer	Sectors
DM174-2004, ACS, CE	Clack	Commercial, Industrial

CLACK VALVE WS2EI

SPECIFIC		CONTROL VALVE FLOW RATES	
Inlet/Outlet	2" female BSPT	Service Δp 1 bar/15 psi drop	26,1 m³/h
Cycles	Up to 6	Backwash Δp 1.7 bar/25 psi drop	18,2 m³/h
Valve Material	Lead free brass	Cv Service	29,7
Regeneration	Downflow or Upflow	Cv Backwash	16,0

OPERATING PRESSURES		OPERATING TEMPERATURES	
Minimum/Maximum	1,4 ÷ 8,6 bar	Minimum/Maximum	4° ÷ 43° C

METER SPECIFICATIONS			
Accuracy	± 5%	Distributor Pilot	50 mm
Flow Rate Range	5,7 ÷ 568 lpm	Drain Line Connection	1,5" Female NPT
Volume Range	0,02 ÷ 5.700 m³	Brine Line Adapters Included	1” Male NPT elbow, ¾” x 1” solvent weld elbow and 1⁄2" OD Poly Tube Compression
Totalizer.	0,001 - 4.294.000 m³	Mounting Base	4" - 8 UN
		Distributor tube length above pressure vessel	+/- 13 mm
		Shipping Weight With Meter	13 kg

ELECTRICAL SPECIFICATIONS		TANK APPLICATIONS	
Supply Voltage	200V AC to 240V AC	Water Softener	12" ÷ 48" diameter
Supply Frequency	50/60 Hz	Water Filter	12" ÷ 36" diameter
Output Voltage	15VDC		
Output Current	500 mA		

CYCLES OF OPERATION	
Backwash 1st (upflow)	1 ÷ 95 minutes - Backwash 1-95
Regenerate Draw/Slow Rinse (downflow)	1 ÷ 180 minutes - Rinse 1-95
Backwash 2nd (upflow)	1 ÷ 95 minutes
Fast Rinse (downflow)	1 ÷ 95 minutes
Regenerant Refill (in service with treated water)	0,1 ÷ 99 minutes
Service (downflow)	

Options: Backwash Filter, Weather Cover

Compatible with the following typical concentrations of regenerants or chemicals: Sodium chloride, potassium chloride, potassium permanganate, sodium bisulfite, chlorine and chloramines

CLACK VALVE WS2EI QC

CONTROL VALVE

- Single valve, available also for twin alternating, twin parallel and multitank systems
- Transformer, Drain Line Flow Control (DLFC) washer, Top Distributor and accessories not included, to order separetely
- 2” top mount or side mount control valve suited for commercial/industrial applications
- Epoxy coated lead free brass valve body
- Economical stainless steel optional meter assembly
- Solid state microprocessor with easy access front panel settings
- Front panel display for time of day, days until next regeneration, volume remaining, current flow rate and total volume used (Totalizer)
- Four methods to initiate regeneration; meter immediate, meter delayed, time clock delayed or pressure differential
- Optional double backwash feature offers optimum regeneration, cleaning ability and efficiency
- Fully adjustable cycle times with 6-cycle control delivers controlled backwash, downflow brining or upflow brining, slow rinse, second backwash, fast rinse, refill and downflow service
- Coin Cell Lithium battery back-up with an 8 hour carry over
- Level VI 15-volt output DC power supply provides safe and easy installation
- Post treated water regenerant refill
- 24 Hour Clock
- Certified to NSF/ANSI 44, 61 and 372

Ref	Description	Fam.	Subfam.		
V2EIDMA-18	WS2EI VALVE DN M I-A QC	25	830		
V2EIDMB-18	WS2EI VALVE DN M I-B QC	25	830		
V2EIDMC-18	WS2EI VALVE DN M I-C QC	25	830		
V2EIDMD-18	WS2EI VALVE DN M I-D QC	25	830		
V2EIDME-18	WS2EI VALVE DN M I-E QC	25	830		
V2EIDMF-18	WS2EI VALVE DN M I-F QC	25	830		
V2EIDMG-18	WS2EI VALVE DN M I-G QC	25	830		
V2EIUMA-18	WS2EI VALVE UP M I-A QC	25	830		
V2EIUMB-18	WS2EI VALVE UP M I-B QC	25	830		
V2EIDTA-18	WS2EI VALVE DN T I-A QC	25	830		
V2EIDTB-18	WS2EI VALVE DN T I-B QC	25	830		
V2EIDTC-18	WS2EI VALVE DN T I-C QC	25	830		
V2EIDTD-18	WS2EI VALVE DN T I-D QC	25	830		
V2EIDTE-18	WS2EI VALVE DN T I-E QC	25	830		
V2EIDTF-18	WS2EI VALVE DN T I-F QC	25	830		
V2EIDTG-18	WS2EI VALVE DN T I-G QC	25	830		
V2EIBMZ-18	WS2EI VALVE BW M I-Z QC	25	830		
V2EIBTZ-18	WS2EI VALVE BW T I-Z QC	25	830		

When using the WS2EI/QC Control Valve, one of the following Tank Base Assemblies must be ordered, to complete the Control Valve:

Ref	Description	Fam.	Subfam.		
V3064	WS2H/2 QC 4” BASE ASSEMBLY	25	850		
V3055	WS2H/2 QC 6” FLANGE BASE ASSEMBLY	25	850		
V3260BSPT-02	WS2H/2 QC 2″ SIDE MOUNT BASE ASSEMBLY BSPT	25	850		

CLACK VALVE WS2EI QC

Ref	Softening System/Filter	Ø Injector Tank Size	Downflow/Upflow	Meter	Mixing Valve
V2EIDMA-18	Softening System	18"	Downflow	included	Not included
V2EIDMB-18	Softening System	21"	Downflow	included	Not included
V2EIDMC-18	Softening System	24"	Downflow	included	Not included
V2EIDMD-18	Softening System	30"	Downflow	included	Not included
V2EIDME-18	Softening System	36"	Downflow	included	Not included
V2EIDMF-18	Softening System	42"	Downflow	included	Not included
V2EIDMG-18	Softening System	48"	Downflow	included	Not included
V2EIUMA-18	Softening System	24"	Upflow	included	Not included
V2EIUMB-18	Softening System	30"	Upflow	included	Not included
V2EIDTA-18	Softening System	18"	Downflow	Not included	Not included
V2EIDTB-18	Softening System	21"	Downflow	Not included	Not included
V2EIDTC-18	Softening System	24"	Downflow	Not included	Not included
V2EIDTD-18	Softening System	30"	Downflow	Not included	Not included
V2EIDTE-18	Softening System	36"	Downflow	Not included	Not included
V2EIDTF-18	Softening System	42"	Downflow	Not included	Not included
V2EIDTG-18	Softening System	48"	Downflow	Not included	Not included
V2EIBMZ-18	Filter	N/A	Backwash	included	Not included
V2EIBTZ-18	Filter	N/A	Backwash	Not included	Not included

NOTE:Controls listed are priced without a power cord or transformer. For AC Adapter (Transformer) selection see “ACCESSORIES” section (V3186-XX). Drain Line Flow Controls (DLFC) washer is not included. Please order separately. For 3/4” drain fitting (V3158-04), Flow rates 0.07 - 10.0 gpm: reference order numbers V3162-007 through V3162-100. For 1” drain fitting (V3008-05), Flow rates 9.0 - 25.0 gpm: reference order numbers V3190-090 through V3190-250. For 1.5” x 1.5” drain fittings (V3080BSPT), Flow rates 9 to 85 gpm: reference order numbers V3162-007 through V3162-100, and V3190-090 through V3190-250. 63 mm Top Distributor is not included. Please order separately: reference order numbers V-D1199-05 or V-D1200-04.

Box: WxLxH	Box: Q.ty	Box: Weight	Pallet: WxLxH	Pallet: Q.ty	Pallet: Weight
	1				

Certificates	Manufacturer	Sectors
ACS CE	Clack	Commercial, Industrial

CLACK VALVE WS2EIQC

SPECIFIC		CONTROL VALVE FLOW RATES	
Inlet/Outlet	2" female BSPT	Service Δp 1 bar/15 psi drop	473 lpm (28,4 m3/h) (125 gpm)
Cycles	Up to 6	Backwash Δp 1.7 bar/25 psi drop	322 lpm (19,3 m3/h) (85 gpm)
Valve Material	Lead free brass	Cv Service	32,3
Regeneration	Downflow or Upflow	Cv Backwash	17,0

OPERATING PRESSURES		OPERATING TEMPERATURES	
Minimum/Maximum	1,4 ÷ 8,6 bar	Minimum/Maximum	4° ÷ 43° C

METER SPECIFICATIONS			
Accuracy	± 5%	Distributor Pilot	63 mm
Flow Rate Range	5,7 ÷ 568 lpm	Drain line connection	1,5" Female NPT
Volume Range	0,02 ÷ 5.700 m³	Brine Line Adapters Included	1” Male NPT elbow, ¾” x 1” solvent weld elbow and 1⁄2" OD Poly Tube Compression
Totalizer	0,001 - 4.294.000 m³	Mounting Base	4" - 8 UN, 6” Flange or Side Mount
		Distributor tube length above pressure vesselwith 4" - 8 UN QC Basewith 6" Flange QC Base	57 mm 64 mm
		Weight	14 kg

ELECTRICAL SPECIFICATIONS		TANK APPLICATIONS	
Supply Voltage	200V AC to 240V AC	Water Softener	12" ÷ 48" diameter
Supply Frequency	50/60 Hz	Water Filter	12" ÷ 36" diameter
Output Voltage	15VDC		
Output Current	500 mA		

CYCLES OF OPERATION	
Backwash 1st (upflow)	1 ÷ 95 minutes
Regenerate Draw/Slow Rinse (downflow)	1 ÷ 180 minutes
Backwash 2nd (upflow)	1 ÷ 95 minutes
Fast Rinse (downflow)	1 ÷ 95 minutes
Regenerant Refill (in service with treated water)	0,1 ÷ 99 minutes
Service (downflow)	

Options: Backwash Filter, Weather Cover

Compatible with the following typical concentrations of regenerants or chemicals: Sodium chloride, potassium chloride, potassium permanganate, sodium bisulfite, chlorine and chloramines.

CLACK VALVE WS2CI

CONTROL VALVE

- Transformer, Drain Line Flow Control (DLFC) washer, Top Distributor and accessories not included, to order separetely
- 2” Top mount control valve suited for commercial/industrial applications
- Epoxy coated lead free brass valve body
- Economical stainless steel optional meter assembly
- Solid state microprocessor with easy access front panel settings Front panel display for time of day, days until next regeneration, volume remaining and current flow rate
- Four methods to initiate regeneration; meter immediate, meter delayed, time clock delayed or pressure differential
- Program in ppm, French degrees, German degrees, or cubic meters
- Fully programmable regeneration cycle sequence (maximum 9)
- Programmable regeneration cycle times
- Days override feature; 1-28 days available
- Coin Cell Lithium battery back-up with an 24 hour carry over
- Level VI 15-volt output DC power supply provides safe and easy installation
- Pre or Post treated water regenerant refill
- 24 Hour Clock
- Reliable and proven DC drive
- Certified to NSF/ANSI 44, 61 and 372

Ref	Description	Fam.	Subfam.		
V2CIDMD-05	WS2CI VALVE DN M I-D	25	820		
V2CIDME-05	WS2CI VALVE DN M I-E	25	820		
V2CIDMF-05	WS2CI VALVE DN M I-F	25	820		
V2CIDMG-05	WS2CI VALVE DN M I-G	25	820		
V2CIUMA-05	WS2CI VALVE UP M I-A	25	820		
V2CIUMB-05	WS2CI VALVE UP M I-B	25	820		
V2CIDTA-05	WS2CI VALVE DN T I-A	25	820		
V2CIDTB-05	WS2CI VALVE DN T I-B	25	820		
V2CIDTC-05	WS2CI VALVE DN T I-C	25	820		
V2CIDTD-05	WS2CI VALVE DN T I-D	25	820		
V2CIDTE-05	WS2CI VALVE DN T I-E	25	820		
V2CIDTF-05	WS2CI VALVE DN T I-F	25	820		
V2CIDTG-05	WS2CI VALVE DN T I-G	25	820		
V2CIBMZ-05	WS2CI VALVE BW M I-Z	25	820		
V2CIBTZ-05	WS2CI VALVE BW T I-Z	25	820		

CLACK VALVE WS2CI

Ref	Softening System/Filter	Ø Bombola	Downflow/Upflow	Meter	Valvola di Miscelazione
V2CIDMD-05	Softening System	30"	Downflow	included	Not included
V2CIDME-05	Softening System	36"	Downflow	included	Not included
V2CIDMF-05	Softening System	42"	Downflow	included	Not included
V2CIDMG-05	Softening System	48"	Downflow	included	Not included
V2CIUMA-05	Softening System	24"	Upflow	included	Not included
V2CIUMB-05	Softening System	30"	Upflow	included	Not included
V2CIDTA-05	Softening System	18"	Downflow	Not included	Not included
V2CIDTB-05	Softening System	21"	Downflow	Not included	Not included
V2CIDTC-05	Softening System	24"	Downflow	Not included	Not included
V2CIDTD-05	Softening System	30"	Downflow	Not included	Not included
V2CIDTE-05	Softening System	36"	Downflow	Not included	Not included
V2CIDTF-05	Softening System	42"	Downflow	Not included	Not included
V2CIDTG-05	Softening System	48"	Downflow	Not included	Not included
V2CIBMZ-05	Filter	N/A	Backwash	included	Not included
V2CIBTZ-05	Filter	N/A	Backwash	Not included	Not included

NOTE:Controls listed are priced without a power cord or transformer. For AC Adapter (Transformer) selection see “ACCESSORIES” section (V3186-XX). Drain Line Flow Controls (DLFC) washer is not included. Please order separately. For 3/4” drain fitting (V3158-04), Flow rates 0.07 - 10.0 gpm: reference order numbers V3162-007 through V3162-100. For 1” drain fitting (V3008-05), Flow rates 9.0 - 25.0 gpm: reference order numbers V3190-090 through V3190-250. For 1.5” x 1.5” drain fittings (V3080BSPT), Flow rates 9 to 85 gpm: reference order numbers V3162-007 through V3162-100, and V3190-090 through V3190-250. 50 mm Top Distributor is not included. Please order separately: reference order numbers V-D1199-04 or V-D1300.

Box: WxLxH	Box: Q.ty	Box: Weight	Pallet: WxLxH	Pallet: Q.ty	Pallet: Weight
	1				

Certificates	Manufacturer	Sectors
ACS CE	Clack	Commercial, Industrial

CLACK VALVE WS2CI

SPECIFIC		CONTROL VALVE FLOW RATES	
Inlet/Outlet	2 female BSPT	Service Δp 1 bar/15 psi drop	26,1 m³/h
Cycles	Up to 9	Backwash Δp 1.7 bar/25 psi drop	18,2 m³/h
Valve Material	Lead free brass	Cv Service	29,7
Regeneration	Downflow or Upflow	Cv Backwash	16,0

OPERATING PRESSURES		OPERATING TEMPERATURES	
Minimum/Maximum	1,4 ÷ 8,6 bar	Minimum/Maximum	4° ÷ 43° C

METER SPECIFICATIONS			
Accuracy	± 5%	Distributor Pilot	50 mm OD
Flow Rate Range	5,7 ÷ 568 lpm	Drain line connection	1,5" Female NPT
Volume Range	0,02 ÷ 5.700 m³	Brine Line Adapters Included	1” Male NPT elbow, ¾” x 1” solvent weld elbow and 1⁄2" OD Poly Tube Compression
Totalizer	1 - 99.999 m³	Mounting Base	4" - 8 UN
		Distributor tube length above pressure vessel	+/- 13 mm
		Shipping Weight With Meter	13 kg

ELECTRICAL SPECIFICATIONS		TANK APPLICATIONS	
Supply Voltage	200V AC to 240V AC	Water Softener	12" ÷ 48" diameter
Supply Frequency	50/60 Hz	Water Filter	12" ÷ 36" diameter
Output Voltage	15VDC		
Output Current	500 mA		

CYCLES OF OPERATION Choose up to nine regeneration cycles, in any order, with a wide range of available values	
Backwash	1 ÷ 120 minutes
Rinse	1 ÷ 120 minutes
Pause (service)	1 ÷ 480 minutes
Brine (co-current)	1 ÷ 180 minutes
Refill (softener)	0,1 ÷ 99 minutes
Refill (filter)	0,1 ÷ 99 minutes

Options: Backwash Filter, Weather Cover

Compatible with the following typical concentrations of regenerants or chemicals: Sodium chloride, potassium chloride, potassium permanganate, sodium bisulfite, chlorine and chloramines

CLACK VALVE WS2CI QC

CONTROL VALVE

- Single valve, available also for twin alternating, twin parallel and multitank systems
- Transformer, Drain Line Flow Control (DLFC) washer, Top Distributor and accessories not included, to order separetely
- 2” top mount or side mount control valve suited for commercial/industrial applications
- Epoxy coated lead free brass valve body
- Economical stainless steel optional meter assembly
- Solid state microprocessor with easy access front panel settings
- Front panel display for time of day, days until next regeneration, volume remaining and current flow rate
- Four methods to initiate regeneration; meter immediate, meter delayed, time clock delayed or pressure differential
- Program in ppm, French degrees, German degrees, or cubic meters
- Fully programmable regeneration cycle sequence (maximum 9)
- Programmable regeneration cycle times
- Days override feature; 1-28 days available
- Coin Cell Lithium battery back-up with an 24 hour carry over
- Level VI 15-volt output DC power supply provides safe and easy installation
- Pre or Post treated water regenerant refill
- 24 Hour Clock
- Reliable and proven DC drive
- Certified to NSF/ANSI 44, 61 and 372

Ref	Description	Fam.	Subfam.		
V2CIDMA-18	WS2CI VALVE DN M I-A QC	25	820		
V2CIDMB-18	WS2CI VALVE DN M I-B QC	25	820		
V2CIDMC-18	WS2CI VALVE DN M I-C QC	25	820		
V2CIDMD-18	WS2CI VALVE DN M I-D QC	25	820		
V2CIDME-18	WS2CI VALVE DN M I-E QC	25	820		
V2CIDMF-18	WS2CI VALVE DN M I-F QC	25	820		
V2CIDMG-18	WS2CI VALVE DN M I-G QC	25	820		
V2CIUMA-18	WS2CI VALVE UP M I-A QC	25	820		
V2CIUMB-18	WS2CI VALVE UP M I-B QC	25	820		
V2CIDTA-18	WS2CI VALVE DN T I-A QC	25	820		
V2CIDTB-18	WS2CI VALVE DN T I-B QC	25	820		
V2CIDTC-18	WS2CI VALVE DN T I-C QC	25	820		
V2CIDTD-18	WS2CI VALVE DN T I-D QC	25	820		
V2CIDTE-18	WS2CI VALVE DN T I-E QC	25	820		
V2CIDTF-18	WS2CI VALVE DN T I-F QC	25	820		
V2CIDTG-18	WS2CI VALVE DN T I-G QC	25	820		
V2CIBMZ-18	WS2CI VALVE BW M I-Z QC	25	820		
V2CIBTZ-18	WS2CI VALVE BW T I-Z QC	25	820		

When using the WS2CI/QC Control Valve, one of the following Tank Base Assemblies must be ordered, to complete the Control Valve:

Ref	Description	Fam.	Subfam.		
V3064	WS2H/2 QC 4” BASE ASSEMBLY	25	850		
V3055	WS2H/2 QC 6” FLANGE BASE ASSEMBLY	25	850		
V3260BSPT-02	WS2H/2 QC 2″ SIDE MOUNT BASE ASSEMBLY BSPT	25	850		

CLACK VALVE WS2CI QC

Ref	Softening System/Filter	Ø Injector Tank Size	Downflow/Upflow	Meter	Mixing Valve
V2CIDMA-18	Softening System	18"	Downflow	included	Not included
V2CIDMB-18	Softening System	21"	Downflow	included	Not included
V2CIDMC-18	Softening System	24"	Downflow	included	Not included
V2CIDMD-18	Softening System	30"	Downflow	included	Not included
V2CIDME-18	Softening System	36"	Downflow	included	Not included
V2CIDMF-18	Softening System	42"	Downflow	included	Not included
V2CIDMG-18	Softening System	48"	Downflow	included	Not included
V2CIUMA-18	Softening System	24"	Upflow	included	Not included
V2CIUMB-18	Softening System	30"	Upflow	included	Not included
V2CIDTA-18	Softening System	18"	Downflow	Not included	Not included
V2CIDTB-18	Softening System	21"	Downflow	Not included	Not included
V2CIDTC-18	Softening System	24"	Downflow	Not included	Not included
V2CIDTD-18	Softening System	30"	Downflow	Not included	Not included
V2CIDTE-18	Softening System	36"	Downflow	Not included	Not included
V2CIDTF-18	Softening System	42"	Downflow	Not included	Not included
V2CIDTG-18	Softening System	48"	Downflow	Not included	Not included
V2CIBMZ-18	Filter	N/A	Backwash	included	Not included
V2CIBTZ-18	Filter	N/A	Backwash	Not included	Not included

NOTE: Controls listed are priced without a power cord or transformer. For AC Adapter (Transformer) selection see “ACCESSORIES” section (V3186-XX). Drain Line Flow Controls (DLFC) washer is not included. Please order separately. For 3/4” drain fitting (V3158-04), Flow rates 0.07 - 10.0 gpm: reference order numbers V3162-007 through V3162-100. For 1” drain fitting (V3008-05), Flow rates 9.0 - 25.0 gpm: reference order numbers V3190-090 through V3190-250. For 1.5” x 1.5” drain fittings (V3080BSPT), Flow rates 9 to 85 gpm: reference order numbers V3162-007 through V3162-100, and V3190-090 through V3190-250. 63 mm Top Distributor is not included. Please order separately: reference order numbers V-D1199-05 or V-D1200-04.

Box: WxLxH	Box: Q.ty	Box: Weight	Pallet: WxLxH	Pallet: Q.ty	Pallet: Weight
	1				

Certificates	Manufacturer	Sectors
ACS CE	Clack	Commercial, Industrial

CLACK VALVE WS2CIQC

SPECIFIC		CONTROL VALVE FLOW RATES	
Inlet/Outlet	2" female BSPT	Service Δp 1 bar/15 psi drop	28,4 m³/h
Cycles	Up to 9	Backwash Δp 1.7 bar/25 psi drop	19,3 m³/h
Valve Material	Lead free brass	Cv Service	32,3
Regeneration	Downflow or Upflow	Cv Backwash	17,0

OPERATING PRESSURES		OPERATING TEMPERATURES	
Minimum/Maximum	1,4 ÷ 8,6 bar	Minimum/Maximum	4° ÷ 43° C

METER SPECIFICATIONS			
Accuracy	± 5%	Distributor Pilot	63 mm OD
Flow Rate Range	5,7 ÷ 568 lpm	Drain line connection	1,5" Female NPT
Volume Range	0,02 ÷ 5.700 m³	Brine Line Adapters Included	3/4"x 1” solvent weld elbow and 1⁄2" OD Poly Tube Compression
Totalizer	1 - 99.999 m³	Mounting Base	4" - 8 UN, 6" Flange or Side Mount
		Distributor tube length above pressure vesselwith 4" - 8 UN QC Basewith 6" Flange QC Base	57 mm64 mm
		Weight	14 kg

ELECTRICAL SPECIFICATIONS		TANK APPLICATIONS	
Supply Voltage	200V AC to 240V AC	Water Softener	12" ÷ 48" diameter
Supply Frequency	50/60 Hz	Water Filter	12" ÷ 36" diameter
Output Voltage	15VDC		
Output Current	500 mA		

CYCLES OF OPERATION Choose up to nine regeneration cycles, in any order, with a wide range of available values: Cycle	
Backwash	1 ÷ 120 minutes
Rinse	1 ÷ 120 minutes
Pause (service)	1 ÷ 480 minutes
Brine (co-current)	1 ÷ 180 minutes
Refill (softener)	0,1 ÷ 99 minutes
Refill (filter)	0,1 ÷ 99 minutes

Options: Backwash Filter, Weather Cover

Compatible with the following typical concentrations of regenerants or chemicals: Sodium chloride, potassium chloride, potassium permanganate, sodium bisulfite, chlorine and chloramines.

CLACK VALVE WS2H

CONTROL VALVE

- 2" top mount or side mount control valve suited for industrial applications
- Transformer, Drain Line Flow Control (DLFC) washer, Top Distributor and accessories not included, to order separately
- Epoxy coated lead free brass valve body
- Built-in Internal Flow Meter standard with all valves
- Solid state microprocessor with easy access front removable POD
- Front panel display for Time of Day, Current Flow Rate, Totalizer and Volume/Days until Regeneration
- Four methods to initiate the down flow regeneration; meter delayed, meter immediate, time clock delayed, or pressure differential
- Fully programmable regeneration cycle sequences (maximum 9)
- Fully programmable regeneration cycle times
- Pre or Post treated water regenerant refill
- Days override feature; 1-28 days available
- Stores system configuration and operation data in nonvolatile memory
- Capacitor back-up with a 24 hour carry over
- Level VI 18-volt output DC power supply provides safe and easy installation

- Reliable and proven DC drive
- Certified to NSF/ANSI 44, 61 and 372

Ref	Description	Fam.	Subfam.		
V2HDMA-05	WS2H VALVE DN M I-A	25	840		
V2HDMB-05	WS2H VALVE DN M I-B	25	840		
V2HDMC-05	WS2H VALVE DN M I-C	25	840		
V2HDMD-05	WS2H VALVE DN M I-D	25	840		
V2HDME-05	WS2H VALVE DN M I-E	25	840		
V2HDMF-05	WS2H VALVE DN M I-F	25	840		
V2HDMG-05	WS2H VALVE DN M I-G	25	840		
V2HDMH-05	WS2H VALVE DN M I-H	25	840		
V2HBMZ-05	WS2H VALVE BW M I-Z	25	840		

When using the WS2H Control Valve, one of the following Tank Base Assemblies must be ordered, to complete the Control Valve:

Ref	Description	Fam.	Subfam.		
V3064	WS2H/2 QC 4” BASE ASSEMBLY	25	850		
V3055	WS2H/2 QC 6” FLANGE BASE ASSEMBLY	25	850		
V3260BSPT-02	WS2H/2 QC 2″ SIDE MOUNT BASE ASSEMBLY BSPT	25	850		

CLACK VALVE WS2H

Ref	Softening System/Filter	Ø Injector Tank Size	Downflow/Upflow	Meter	Mixing Valve
V2HDMA-05	Softening System	12"	Downflow	included	Not included
V2HDMB-05	Softening System	14"	Downflow	included	Not included
V2HDMC-05	Softening System	18"	Downflow	included	Not included
V2HDMD-05	Softening System	21"	Downflow	included	Not included
V2HDME-05	Softening System	14"	Upflow	included	Not included
V2HDMF-05	Softening System	18"	Upflow	included	Not included
V2HDMG-05	Softening System	14"	Downflow	Not included	Not included
V2HDMH-05	Softening System	18"	Downflow	Not included	Not included
V2HBMZ-05	Filter	21"	Downflow	Not included	Not included

NOTE: All WS2H Control Valves listed above come standard with a V3162-022, 2.2 gpm Brine Line Flow Control (BLFC). Other sizes are available. Controls listed are priced without a power cord or transformer. For AC Adapter (Transformer) selection see “ACCESSORIES” section (V3461XX-02). Drain Line Flow Controls (DLFC) washer is not included. Please order separately. The V3051BSPT DLFC Assembly BSPT is capable of up to 4 – V3190-XXX Flow Controls and 5 – V3162-XXX Flow Controls for a total flow rate of 150 gpm. For 3/4” DLFC buttons, reference order numbers V3162-007 through V3162-100. For 1” DLFC buttons, reference order numbers V3190-090 through V3190-250. 63 mm Top Distributor is not included. Please order separately: reference order numbers V-D1199-05 or V-D1200-04.

Box: WxLxH	Box: Q.ty	Box: Weight	Pallet: WxLxH	Pallet: Q.ty	Pallet: Weight
	1				

Certificates	Manufacturer	Sectors
ACS CE	Clack	Industrial

CLACK VALVE WS2H

SPECIFIC		CONTROL VALVE FLOW RATES	
Inlet/Outlet	2" female BSPT or 2.5" Groove Lock	Service Δp 15 psi/1 bar drop (includes meter)	28,4 m³/h
Cycles	Up to 9	Backwash Δp 25 psi/1.7 bar drop	28,4 m³/h
Valve Material	Lead free brass	Cv Service	32,3
Regeneration	Downflow	Cv Backwash	25,0

OPERATING PRESSURES		OPERATING TEMPERATURES	
Minimum/Maximum	1,4 ÷ 8,6 bar	Minimum/Maximum	4° ÷ 43° C

METER SPECIFICATIONS			
Accuracy	± 5%	Distributor Pilot	63 mm OD
Flow Rate Range	5,7 ÷ 743 lpm	Drain line connection	2" Female BSPT
Volume Range	0,038 ÷ 3.796 m³	Brine Line Adapters Included	1" Male NPT elbow and ¾" x 1" solvent weld elbow ½" or 5/8" OD Poly Tube Compression
Totalizer	3,8 - 3.785.000 m³	Mounting Base	4" - 8 UN6" Flange or Side Mount
		Distributor tube length above pressure vesselwith 4" - 8 UN QC Base with 6" Flange QC Base	57 mm 64 mm
		Shipping Weight With Internal Meter	22,7 kg

ELECTRICAL SPECIFICATIONS		TANK APPLICATIONS	
Supply Voltage	200V AC to 240V AC	Water Softener	18" ÷ 63" diameter
Supply Frequency	50/60 Hz	Water Filter	18" ÷ 48" diameter
Output Voltage	15VDC		
Output Current	500 mA		

CYCLES OF OPERATION Choose up to nine regeneration cycles, in any order, with a wide range of available values: Cycle	
Backwash	1 ÷ 95 minutes
Brine (draw)	1 ÷ 180 minutes
Slow Rinse	1 ÷ 95 minutes
Fast Rinse	1 ÷ 95 minutes
Refill	0,1 ÷ 99 minutes
Hold (service)	1 - 480 minutes

Options: Backwash Filter, Weather Cover

Compatible with the following typical concentrations of regenerants or chemicals: Sodium chloride, potassium chloride, potassium permanganate, sodium bisulfite, chlorine and chloramines.

CLACK VALVE WS3

CONTROL VALVE

- 3" top mount or side mount control valve suited for industrial applications
- Transformer, Drain Line Flow Control (DLFC) washer, Top Distributor and accessories not included, to order separately;
- Epoxy coated lead free brass valve body;
- Economical stainless steel optional meter assembly;
- Built-in Internal Flow Meter standard with all valves;
- Solid state microprocessor with easy access front removable POD;
- Front panel display for Time of Day, Current Flow Rate, Totalizer and Volume/Days until Regeneration
- Four methods to initiate the down flow regeneration; meter delayed, meter immediate, time clock delayed, or pressure differential
- Fully programmable regeneration cycle sequences (maximum 9)
- Fully programmable regeneration cycle times
- Pre or Post treated water regenerant refill
- Days override feature; 1-28 days available
- Stores system configuration and operation data in nonvolatile memory
- Capacitor back-up with a 24 hour carry over
- Level VI 18-volt output DC power supply provides safe and easy installation
- Reliable and proven DC drive
- Certified to NSF/ANSI 44, 61 and 372

Ref	Description	Fam.	Subfam.		
V3DTA-05	WS3 VALVE DN T I-A	25	845		
V3DTB-05	WS3 VALVE DN T I-B	25	845		
V3DTC-05	WS3 VALVE DN T I-C	25	845		
V3DTD-05	WS3 VALVE DN T I-D	25	845		
V3DTE-05	WS3 VALVE DN T I-E	25	845		
V3DTF-05	WS3 VALVE DN T I-F	25	845		
V3DTG-05	WS3 VALVE DN T I-G	25	845		
V3DTH-05	WS3 VALVE DN T I-H	25	845		
V3BTZ-05	WS3 VALVE BW T I-Z	25	845		

When using the WS3 Control Valve, one of the following Tank Base Assemblies must be ordered, to complete the Control Valve:

Ref	Description	Fam.	Subfam.		
V3090	WS3 6” FLANGE BASE ASSEMBLY	25	850		
V3674BSPT-02	WS3 SIDE MOUNT BASE ASSEMBLY BSPT	25	850		

CLACK VALVE WS3

Ref	Softening System/Filter	Ø Injector Tank Size	Downflow/Upflow	Meter	Mixing Valve
V3DTA-05	Softening System	18"	Downflow	Not included	Not included
V3DTB-05	Softening System	21"	Downflow	Not included	Not included
V3DTC-05	Softening System	24"	Downflow	Not included	Not included
V3DTD-05	Softening System	30"	Downflow	Not included	Not included
V3DTE-05	Softening System	36"	Downflow	Not included	Not included
V3DTF-05	Softening System	42"	Downflow	Not included	Not included
V3DTG-05	Softening System	48"	Downflow	Not included	Not included
V3DTH-05	Softening System	63"	Downflow	Not included	Not included
V3BTZ-05	Filter	N/A	Backwash	Not included	Not included

NOTE: All WS3 Control Valves listed above come standard with a V3162-022, 2.2 gpm Brine Line Flow Control (BLFC). Other sizes are available. Controls listed are priced without a power cord or transformer. For AC Adapter (Transformer) selection see “ACCESSORIES” section (V3461XX-02). Drain Line Flow Controls (DLFC) washer is not included. Please order separately. For the 3” drain fittings (V3764BSPT), Flow rates 9 to 225 gpm: uses up to 9 of the 1” DLFC buttons, reference order numbers V3190-090 through V3190-250. 90 mm Top Distributor is not included. Please order separately.

Box: WxLxH	Box: Q.ty	Box: Weight	Pallet: WxLxH	Pallet: Q.ty	Pallet: Weight
	1				

Certificates	Manufacturer	Sectors
ACS CE	Clack	Industrial

CLACK VALVE WS3

SPECIFIC		CONTROL VALVE FLOW RATES	
Inlet/Outlet	3" female BSPT	Service Δp 15 psi/1 bar drop	56,8 m³/h
Cycles	Up to 9	Backwash Δp 25 psi/1.7 bar drop	50,0 m³/h
Valve Material	Lead free brass	Cv Service	44,6
Regeneration	Downflow	Cv Backwash	44,0

OPERATING PRESSURES		OPERATING TEMPERATURES	
Minimum/Maximum	1,4 ÷ 8,6 bar	Minimum/Maximum	4° ÷ 43° C

METER SPECIFICATIONS			
Accuracy	± 5%	Distributor tube O. D. diameter	90 mm OD
Flow Rate Range	13,3 ÷ 1.325 lpm	Drain line connection	3" BSPT
Volume Range	(3.786 - 3.785.407,9 liters x1000)	Brine Line Adapters Included	1 Male NPT elbow and 3/4" x 1" solvent weld elbow
		Mounting Base	6” Flange or Side Mount
		Distributor tube length above pressure vessel with 6" Flange QC Base	70 mm
		Shipping Weight Without Optional Meter	25,9 kg

ELECTRICAL SPECIFICATIONS		TANK APPLICATIONS	
Supply Voltage	200V AC to 240V AC	Water Softener	18" ÷ 63" diameter
Supply Frequency	50/60 Hz	Water Filter	18" ÷ 63" diameter
Output Voltage	15VDC		
Output Current	500 mA		

CYCLES OF OPERATION Choose up to nine regeneration cycles, in any order, with a wide range of available values	
Backwash	1 ÷ 95 minutes
Brine	1 ÷ 180 minutes
Slow Rinse	1 ÷ 95 minutes
Fast Rinse	1 ÷ 95 minutes
Refill	0,1 ÷ 99 minutes
Hold (service)	0,1 ÷ 480 minutes

Options: Backwash Filter

Compatible with the following typical concentrations of regenerants or chemicals: Sodium chloride, potassium chloride, potassium permanganate, sodium bisulfite, chlorine and chloramines.

CLACK VALVE: WS1CI, WS1CI TWIN, WS1EI, WS1EI TWIN, WS1TC, WS125TC, WS125CI, WS125EI, WS15CI, WS15EI, WS2CI, WS2EI, WS2CI/QC, WS2EI/QC

ACCESSORIES

Ref	Description	Fam.	Subfam.		
V3006	WS1 BYPASS ASSEMBLY	15	760		
V3007	WS1 FITTING 1” PVC MALE NPT ELBOW ASSEMBLY	15	760		
V3007-01	WS1 FITTING 3/4” X 1” PVC SOLVENT ELBOW ASSEMBLY	15	760		
V3007-02LF	WS1 FITTING 1″ BRASS SWEAT ASSEMBLY LF	15	760		
V3007-03LF	WS1 FITTING 3/4″ BRASS SWEAT ASSEMBLY LF	15	760		
V3007-06	WS1 FITTING 1” PLASTIC MALE BSPT ASSEMBLY	15	760		
V3007-07	WS1 FITTING 1.25” & 1.5” PVC SOLVENT ASSEMBLY	15	760		
V3007-08	WS1 FITTING 1.25” PLASTIC MALE BSPT ASSEMBLY	15	760		
V3007-09LF	WS1 FITTING 1-1/4″ & 1-1/2″ BRASS SWEAT ASSY LF	15	760		
V3007-14	WS1 FITTING 3/4” PLASTIC MALE BSPT ASSEMBLY	15	760		
V3007-15	WS1 FITTING 3/4″ JOHN GUEST QC ELBOW ASSEMBLY	15	760		
V3007-16	WS1 FITTING 1″ PVC MALE BSPT 90 ASSEMBLY	15	760		
V3007-17	WS1 FITTING 1″ JOHN GUEST QC ASSEMBLY	15	760		
V3007-19	WS1 FITTING 3/4″ STRAIGHT JOHN GUEST QC	15	760		
V3008-02	WS1 DRAIN FITTING 1” STRAIGHT W/SILENCER	15	760		
V3008-04	WS1 DRAIN FITTING 1” STRAIGHT W/SILENCER	15	760		
V3008-05	WS2 DRAIN FITTING 1” MALE NPT STRAIGHT W/O SILENCER	25	850		
V3009	WS1 AUXILIARY MICROSWITCH ASSEMBLY	15	760		
V3014	WS1 SERIES MICROSWITCH ASSEMBLY	15	760		
V3017	WS2 SERVICE OR FILL SWITCH ASSEMBLY	25	850		
V3022	WS1 STACK PULLER ASSEMBLY	15	760		
V3030-01	SYSTEM CONTROLLER BOX	15	760		
V3040BSPT	WS1.5 METER ASSEMBLY BSPT	25	850		
V3040BSPT-15	WS1.5 METER ASSEMBLY BSPT 15 FOOT METER CABLE	25	850		
V3051BSPT	WS2H/3 DLFC ASSY 2 M-BSPT X 2 F-BSPT (NO DLFC BUTTONS)	25	850		
V3053	WS2 2-1/2” GROOVE LOCK CLAMP ASSEMBLY	25	850		
V3055	WS2H/2 QC 6” FLANGE BASE ASSEMBLY	25	850		
V3064	WS2H/2 QC 4” BASE ASSEMBLY	25	850		
V3069FF-01	WS1/125 MAV FEMALE X FEMALE 3-WIRE	15	760		
V3069MM-01	WS1/125 MAV MALE X MALE 3-WIRE	15	760		

CLACK VALVE: WS1CI, WS1CI TWIN, WS1EI, WS1EI TWIN, WS1TC, WS125TC, WS125CI, WS125EI, WS15CI, WS15EI, WS2CI, WS2EI, WS2CI/QC, WS2EI/QC

Ref	Description	Fam.	Subfam.		
V3070FF	WS1 & WS1.25 NO HARD WATER BY-PASS VALVE FEMALE XFEMALE	15	760		
V3070FM	WS1 & WS1.25 NO HARD WATER BY-PASS VALVE FEMALE XMALE	15	760		
V3071BSPT	MOTORIZED ALTERNATING VALVE 1,5” BSPT	25	850		
V3076BSPT	WS2 MAV BSPT REVISION 2 (PISTON STYLE)	25	850		
V3080BSPT	WS2 DLFC ASSY 1.5 M-NPT X 1.5 F-BSPT (NO DLFC BUTTONS)	25	850		
V3094BSPT	WS2 METER ASSEMBLY MALE X FEMALE BSPT 70 CM METER CABLE	25	850		
V3094BSPT-15	WS2 METER ASSEMBLY MALE X FEMALE BSPT 15´ METER CABLE	25	850		
V3097BSPT	15″ NO HARD WATER BYPASS MALE X FEMALE BSPT	25	850		
V3098BSPT	2″ NO HARD WATER BYPASS MALE X FEMALE BSPT	25	850		
V3158-04	WS2 DRAIN ELBOW 3/4″ MALE NPT NO SILENCER	25	850		
V3162-007	WS1 DLFC 007 (0.7 GPM) FOR 3/4”	15	760		
V3162-010	WS1 DLFC 010 (1.0 GPM) FOR 3/4”	15	760		
V3162-013	WS1 DLFC 013 (1.3 GPM) FOR 3/4”	15	760		
V3162-017	WS1 DLFC 017 (1.7 GPM) FOR 3/4”	15	760		
V3162-022	WS1 DLFC 022 (2.2 GPM) FOR 3/4”	15	760		
V3162-027	WS1 DLFC 027 (2.7 GPM) FOR 3/4”	15	760		
V3162-032	WS1 DLFC 032 (3.2 GPM) FOR 3/4”	15	760		
V3162-042	WS1 DLFC 042 (4.2 GPM) FOR 3/4”	15	760		
V3162-053	WS1 DLFC 053 (5.3 GPM) FOR 3/4”	15	760		
V3162-065	WS1 DLFC 065 (6.5 GPM) FOR 3/4”	15	760		
V3162-075	WS1 DLFC 075 (7.5 GPM) FOR 3/4”	15	760		
V3162-090	WS1 DLFC 090 (9.0 GPM) FOR 3/4”	15	760		
V3162-100	WS1 DLFC 100 (10.0 GPM) FOR 3/4”	15	760		
V3186-01	WS1 AC ADAPTER (TRANSFORMER) CORD ONLY 15 FEET	15	760		
V3186-06	WS1 AC POWER SUPPLY (TRANSF.) US 15 VOLT DC	15	760		
V3186-36	WS1 AC ADAPTER CORD ONLY 36 FEET	15	760		
V3186EU-06	WS1 AC POWER SUPPLY (TRANSFORMER) EU 15 VOLT DC	15	760		
V3186UK-06	WS1 POWER SUPPLY (TRANSFORMER) UK 15 VOLT DC HOCP	15	760		

CLACK VALVE: WS1CI, WS1CI TWIN, WS1EI, WS1EI TWIN, WS1TC, WS125TC, WS125CI, WS125EI, WS15CI, WS15EI, WS2CI, WS2EI, WS2CI/QC, WS2EI/QC

Ref	Description	Fam.	Subfam.		
V3190-090	WS1 DLFC 090 (9.0 GPM) FOR 1”	25	850		
V3190-100	WS1 DLFC 100 (10.0 GPM) FOR 1”	25	850		
V3190-110	WS1 DLFC 110 (11.0 GPM) FOR 1”	25	850		
V3190-130	WS1 DLFC 130 (13.0 GPM) FOR 1”	25	850		
V3190-150	WS1 DLFC 150 (15.0 GPM) FOR 1”	25	850		
V3190-170	WS1 DLFC 170 (17.0 GPM) FOR 1”	25	850		
V3190-200	WS1 DLFC 200 (20.0 GPM) FOR1”	25	850		
V3190-250	WS1 DLFC 250 (25.0 GPM) FOR 1”	25	850		
V3191-01	WS1 BYPASS VERTICAL ADAPTER ASSEMBLY	15	760		
V3192	WS1 NUT 3/4” DRAIN ELBOW (FOR 5/8” X 1/2” POLYTUBE)	15	760		
V3193-02	WS1 SERVICE SPANNER WRENCH	15	760		
V3260BSPT-02	WS2H/2 QC 2″ SIDE MOUNT BASE ASSEMBLY BSPT	25	850		
V3467	WS1 BY PASS INLINE ADAPTER FITTINGS	15	760		
V3474	WS ALTERNATING CONNECTION CORD 8’ BLACK FOR SINGLE METER (3 WIRE INTERCO	25	860		
V3475-12	WS2H/3 SYSTEM CONNECTION CORD 12´ RED	25	850		
V3475-24	WS2H/3 SYSTEM CONNECTION CORD 24´ BLUE	25	850		
V3475-36	WS2H/3 SYSTEM CONNECTION CORD 36’ YELLOW	25	850		
V3478	WS1 INLINE BYPASS ASSEMBLY 1” BRASS SWEAT	15	760		
V3478-01	WS1 INLINE BYPASS ASSEMBLY 3/4” BRASS SWEAT	15	760		
V3783WC-A	WS2 WEATHER COVER ALMOND	25	850		
V3783WC-W	WS2 WEATHER COVER WHITE	25	850		
V3974WC-A	WS15 WEATHER COVER ALMOND GENERATION 2	25	850		
V3962	WS1 DRAIN ELBOW & RETAINER ASSY W/O SILENCER	15	760		
V3974WC-W	WS15 WEATHER COVER WHITE GENERATION 2	25	850		
V4052-01	TT TWIN TANK INTERCONNECT KIT FOR 12″-21″ TANKS	15	760		
V4057	WS1 DRAIN ELBOW & RETAINER ASSY W/SILENCER	15	760		
V4099	WS1 EXTERNAL IN-LINE MIXING VALVE	15	760		
V4276-15	15´ POWER CORD	15	760		
V4276-36	36´ POWER CORD	15	760		
V4325	SOFTWARE CONFIGURATOR PROGRAM	15	760		
V-D1199-04	TOP STACK DISTRIBUTOR 50 MM	25	850		
V-D1199-05	TOP STACK DISTRIBUTOR 63 MM	25	850		
V-D1200-04	TOP STACK DISTRIBUTOR 63 MM FOR FLANGE TANKS	25	850		
V-D1203-03	UPPER SCREEN 32 MM-TWIST LOCK	15	760		
V-D1300	TOP BAFFLE DISTRIBUTOR 50 MM	25	850		
V-PKP10TS8-BULK	POLYTUBE INSERT 5/8” - ″FOR DRAIN LINE WITH V3192NUT″	15	760		

CLACK VALVE: WS2H, WS3

ACCESSORIES

Ref	Description	Fam.	Subfam.		
V3051BSPT	WS2H/3 DLFC ASSY 2 M-BSPT X 2 F-BSPT (NO DLFC BUTTONS)	25	850		
V3053	WS2 2-1/2” GROOVE LOCK CLAMP ASSEMBLY	25	850		
V3055	WS2H/2 QC 6” FLANGE BASE ASSEMBLY	25	850		
V3064	WS2H/2 QC 4” BASE ASSEMBLY	25	850		
V3076BSPT	WS2 MAV BSPT REVISION 2 (PISTON STYLE)	25	850		
V3116-06	LABEL FOR INJECTOR PLUG	15	770		
V3080BSPT	WS2 DLFC ASSY 1.5 M-NPT X 1.5 F-BSPT (NO DLFC BUTTONS)	25	850		
V3083BSPT	WS3 MOTORIZED ALTERNATING VALVE BSPT	25	850		
V3090	WS3 6” FLANGE BASE ASSEMBLY	25	850		
V3095BSPT	WS3 3″ METER ASSEMBLY BSPT MALE X FEMALE	25	850		
V3095BSPT-15	WS3 MOTORIZED ALTERNATING VALVE BSPT	25	850		
V3098BSPT	2″ NO HARD WATER BYPASS MALE X FEMALE BSPT	25	850		
V3099BSPT	WS3 NO HARD WATER BYPASS MALE X FEMALE BSPT	25	850		
V3162-007	WS1 DLFC 007 (0.7 GPM) FOR 3/4”	15	760		
V3162-010	WS1 DLFC 010 (1.0 GPM) FOR 3/4”	15	760		
V3162-013	WS1 DLFC 013 (1.3 GPM) FOR 3/4”	15	760		
V3162-017	WS1 DLFC 017 (1.7 GPM) FOR 3/4”	15	760		
V3162-022	WS1 DLFC 022 (2.2 GPM) FOR 3/4”	15	760		
V3162-027	WS1 DLFC 027 (2.7 GPM) FOR 3/4”	15	760		
V3162-032	WS1 DLFC 032 (3.2 GPM) FOR 3/4”	15	760		
V3162-042	WS1 DLFC 042 (4.2 GPM) FOR 3/4”	15	760		
V3162-053	WS1 DLFC 053 (5.3 GPM) FOR 3/4”	15	760		
V3162-065	WS1 DLFC 065 (6.5 GPM) FOR 3/4”	15	760		
V3162-075	WS1 DLFC 075 (7.5 GPM) FOR 3/4”	15	760		
V3162-090	WS1 DLFC 090 (9.0 GPM) FOR 3/4”	15	760		
V3162-100	WS1 DLFC 100 (10.0 GPM) FOR 3/4”	15	760		

CLACK VALVE: WS2H, WS3

Ref	Description	Fam.	Subfam.		
V3190-090	WS1 DLFC 090 (9.0 GPM) FOR 1”	25	850		
V3190-100	WS1 DLFC 100 (10.0 GPM) FOR 1”	25	850		
V3190-110	WS1 DLFC 110 (11.0 GPM) FOR 1”	25	850		
V3190-130	WS1 DLFC 130 (13.0 GPM) FOR 1”	25	850		
V3190-150	WS1 DLFC 150 (15.0 GPM) FOR 1”	25	850		
V3190-170	WS1 DLFC 170 (17.0 GPM) FOR 1”	25	850		
V3190-200	WS1 DLFC 200 (20.0 GPM) FOR1”	25	850		
V3190-250	WS1 DLFC 250 (25.0 GPM) FOR 1”	25	850		
V3260BSPT-02	WS2H/2 QC 2″ SIDE MOUNT BASE ASSEMBLY BSPT	25	850		
V4427	WS2H/3 24VDC 0.8A EU POWER SUPPLY	25	850		
V4428EU	WS2H/3 PCB WITH MODBUS EU UPGRADE KIT	25	860		
V3461-01	WS2H/3 AC 20V ADAPTER USA	25	850		
V3461EU-01	WS2H/3 AC 20V ADAPTER EU	25	850		
V3461EU-02	WS2H/3 24VDC 0.8A EU POWER SUPPLY	25	850		
V3474	WS ALTERNATING CONNECTION CORD 8’ BLACK FOR SINGLE METER (3 WIRE INTERCO	25	860		
V3475-12	WS2H/3 SYSTEM CONNECTION CORD 12´ RED	25	850		
V3475-24	WS2H/3 SYSTEM CONNECTION CORD 24´ BLUE	25	850		
V3475-36	WS2H/3 SYSTEM CONNECTION CORD 36’ YELLOW	25	850		
V3674BSPT-02	WS3 SIDE MOUNT BASE ASSEMBLY BSPT	25	850		
V3764BSPT	WS3 DLFC ASSY 3 M-BSPT X 3 F-BSPT (NO DLFC BUTTONS)	25	850		
V4039	WS3 METER ASSEMBLY WITH 4´ CORD	25	850		
V4051WC	WS2H/3 WEATHER COVER	25	850		
V-D1199-05	TOP STACK DISTRIBUTOR 63 MM	25	850		
V-D1200-04	TOP STACK DISTRIBUTOR 63 MM FOR FLANGE TANKS	25	850		

INJECTORS FOR VARIOUS TANK SIZES: WS1 e WS1.25 (CAN BE ORDERED SEPARATELY)

Ref	Description	Fam.	Subfam.		
V3010-1A	WS1 INJECTOR ASSEMBLY A BLACK	15	770		
V3010-1B	WS1 INJECTOR ASSEMBLY B BROWN	15	770		
V3010-1C	WS1 INJECTOR ASSEMBLY C VIOLET	15	770		
V3010-1D	WS1 INJECTOR ASSEMBLY D RED	15	770		
V3010-1E	WS1 INJECTOR ASSEMBLY E WHITE	15	770		
V3010-1F	WS1 INJECTOR ASSEMBLY F BLUE	15	770		
V3010-1G	WS1 INJECTOR ASSEMBLY G YELLOW	15	770		
V3010-1H	WS1 INJECTOR ASSEMBLY H GREEN	15	770		
V3010-1I	WS1 INJECTOR ASSEMBLY I ORANGE	15	770		
V3010-1J	WS1 INJECTOR ASSEMBLY J LIGHT BLUE	15	770		
V3010-1K	WS1 INJECTOR ASSEMBLY K LIGHT GREEN	15	770		
V3010-1Z	WS1 INJECTOR ASSEMBLY Z PLUG	15	770		

Ref	Injector Color	Typical Tank Diameter Downflow Brine	Typical Tank Diameter Upflow Brine
V3010-1A	Black	6"	8"
V3010-1B	Brown	7"	9"
V3010-1C	Violet	8"	10"
V3010-1D	Red	9"	12
V3010-1E	White	10"	13"
V3010-1F	Blue	12"	14"
V3010-1G	Yellow	13"	14"
V3010-1H	Green	14"	16"
V3010-1I	Orange	16"	18"
V3010-1J	Light Blue	18"	21"
V3010-1K	Light Green	21"	N.A
V3010-1Z	N.A	N.A	N.A

- Note: Injector Recommendations - Above injectors are for downflow brining units,
- For upflow brining units the injector should be "down-sized" two tank sizes.
- Example: A 8" downflow softener would use a "C" injector, where as a 8" upflow softener would use an "A" injector

INJECTORS FOR VARIOUS TANK SIZES: WS1.5 (CAN BE ORDERED SEPARATELY)

Ref	Description	Fam.	Subfam.		
V3010-15B	WS1.5 INJECTOR ASSEMBLY B VIOLET	25	860		
V3010-15C	WS1.5 INJECTOR ASSEMBLY C RED	25	860		
V3010-15D	WS1.5 INJECTOR ASSEMBLY D WHITE	25	860		
V3010-15E	WS1.5 INJECTOR ASSEMBLY E BLUE	25	860		
V3010-15F	WS1.5 INJECTOR ASSEMBLY F YELLOW	25	860		
V3010-15G	WS1.5 INJECTOR ASSEMBLY G GREEN	25	860		
V3010-15H	WS1.5 INJECTOR ASSEMBLY H ORANGE	25	860		
V3010-15Z	WS1.5 INJECTOR ASSEMBLY Z PLUG	25	860		

Ref	Injector Color	Typical Tank Diameter/ Down Flow Brine	Typical Tank Diameter/ Up Flow Brine
V3010-15B	Violet	12"	14"
V3010-15C	Red	13"	16"
V3010-15D	White	14"	18"
V3010-15E	Blue	16"	21"
V3010-15F	Yellow	18"	24"
V3010-15G	Green	21"	30"
V3010-15H	Orange	24"	n/a
V3010-15Z		n/a	

Note: Injector Recommendations - Above injectors are for downflow brining units,

- For upflow brining units the injector should be "down-sized" two tank sizes.
- Example: A 24" downflow softener would use a "H" injector, where as a 24" upflow softener would use an "F" injector

INJECTORS FOR VARIOUS TANK SIZES: WS2/2H/3 (CAN BE ORDERED SEPARATELY)

Ref	Description	Fam.	Subfam.		
V3010-2A	WS2/2H/3 INJECTOR ASSEMBLY A	25	860		
V3010-2B	WS2/2H/3 INJECTOR ASSEMBLY B	25	860		
V3010-2C	WS2/2H/3 INJECTOR ASSEMBLY C	25	860		
V3010-2D	WS2/2H/3 INJECTOR ASSEMBLY D	25	860		
V3010-2E	WS2/2H/3 INJECTOR ASSEMBLY E	25	860		
V3010-2F	WS2/2H/3 INJECTOR ASSEMBLY F	25	860		
V3010-2G	WS2/2H/3 INJECTOR ASSEMBLY G	25	860		
V3010-2H	WS2H/3 INJECTOR ASSEMBLY H	25	860		

Ref	Injector	Typical Tank Diameter/ Down Flow Brine	Typical Tank Diameter/ Up Flow Brine
V3010-2A	Stamped A	18"	24"
V3010-2B	Stamped B	21"	30"
V3010-2C	Stamped C	24"	36"
V3010-2D	Stamped D	30"	42"
V3010-2E	Stamped E	36"	48"
V3010-2F	Stamped F	42"	n/a
V3010-2G	Stamped G	48"	n/a
V3010-2H	Gray PVC	63"	n/a

Note: Injector Recommendations - Above injectors are for downflow brining units,

- For upflow brining units the injector should be "down-sized" two tank sizes.
- Example: A 24" downflow softener would use a "C" injector, where as a 24" upflow softener would use an "A" injector

INJECTORS FOR VARIOUS TANK SIZES: WS2 (CAN BE ORDERED SEPARATELY)

Ref	Description	Fam.	Subfam.		
V3010-2R-15B	WS2/WS2H INJECTOR R MODIFIED ASSEMBLY W/3010-15B(12” DOWNFLOW)	25	860		
V3010-2S-15C	WS2/WS2H INJECTOR S MODIFIED ASSEMBLY W/3010-15C(13” DOWNFLOW)	25	860		
V3010-2T-15D	WS2/WS2H INJECTOR T MODIFIED ASSEMBLY W/3010-15D(14” DOWNFLOW)	25	860		
V3010-2U-15E	WS2/WS2H INJECTOR U MODIFIED ASSEMBLY W/3010-15E(16” DOWNFLOW)	25	860		
V3010-2A	WS2/2H/3 INJECTOR ASSEMBLY A	25	860		
V3010-2B	WS2/2H/3 INJECTOR ASSEMBLY B	25	860		
V3010-2C	WS2/2H/3 INJECTOR ASSEMBLY C	25	860		
V3010-2D	WS2/2H/3 INJECTOR ASSEMBLY D	25	860		
V3010-2E	WS2/2H/3 INJECTOR ASSEMBLY E	25	860		
V3010-2F	WS2/2H/3 INJECTOR ASSEMBLY F	25	860		
V3010-2G	WS2/2H/3 INJECTOR ASSEMBLY G	25	860		

Ref	Typical Tank Diameter/ Down Flow Brine	Typical Tank Diameter/ Up Flow Brine
V3010-2R-15B	12"	14"
V3010-2S-15C	13"	16"
V3010-2T-15D	14"	18"
V3010-2U-15E	16"	21"
V3010-2A	18"	24"
V3010-2B	21"	30"
V3010-2C	24"	36"
V3010-2D	30"	42"
V3010-2E	36"	48"
V3010-2F	42"	n/a
V3010-2G	48	n/a

Note: Injector Recommendations - Above injectors are for downflow brining units,

- For upflow brining units the injector should be "down-sized" two tank sizes.
- Example: A 24" downflow softener would use a "C" injector, where as a 24" upflow softener would use an "A" injector

EUROTROL®
WATER TREATMENT COMPONENTS

Pressure vessels and accessories
MWG, STRUCTURAL

Back to index

MWG Residential Pressure Vessels with Base

- Made in China;
- Composite pressure vessels PE liner reinforced with fiberglass and epoxy resin;
- For industrial and potable water treatment systems;
- European 2014/68/EU Directive compliant for pressure equipment (PED);
- Max operating pressure 10 bar; max operating temperature 50°C;
- Top connection threaded 2 ½" – 8NPSM or 4"– 8UN; Cycle test 100.000 times from 0 to 10,5 bar;
- Burst test to 4 times max operating pressure;
- Blue colour;
- Warranty 10 years.

Ref	Description	Fam.	Subfam.		
BMWG05013BB	MWG PRESSURE VESSEL 5X13 2.5″ BLUE	43	412		
BMWG06013BB	MWG PRESSURE VESSEL 6X13 2.5″ BLUE	43	412		
BMWG06018BB	MWG PRESSURE VESSEL 6X18 2.5″ BLUE	43	412		
BMWG06035BB	MWG PRESSURE VESSEL 6X35 2.5″ BLUE	43	412		
BMWG07013BB	MWG PRESSURE VESSEL 7X13 2.5″ BLUE	43	412		
BMWG07017BB	MWG PRESSURE VESSEL 7X17 2.5″ BLUE	43	412		
BMWG07024BB	MWG PRESSURE VESSEL 7X24 2.5″ BLUE	43	412		
BMWG07030BB	MWG PRESSURE VESSEL 7X30 2.5″ BLUE	43	412		
BMWG07035BB	MWG PRESSURE VESSEL 7X35 2.5″ BLUE	43	412		
BMWG08013BB	MWG PRESSURE VESSEL 8X13 2.5″ BLUE	43	412		
BMWG08017BB	MWG PRESSURE VESSEL 8X17 2.5″ BLUE	43	412		
BMWG08024BB	MWG PRESSURE VESSEL 8X24 2.5″ BLUE	43	412		
BMWG08030BB	MWG PRESSURE VESSEL 8X30 2.5″ BLUE	43	412		
BMWG08035BB	MWG PRESSURE VESSEL 8X35 2.5″ BLUE	43	412		
BMWG08044BB	MWG PRESSURE VESSEL 8X44 2.5″ BLUE	43	412		
BMWG09017BB	MWG PRESSURE VESSEL 9X17 2.5″ BLUE	43	412		
BMWG09030BB	MWG PRESSURE VESSEL 9X30 2.5″ BLUE	43	412		
BMWG09035BB	MWG PRESSURE VESSEL 9X35 2.5″ BLUE	43	412		
BMWG09042BB	MWG PRESSURE VESSEL 9X42 2.5″ BLUE	43	412		
BMWG09048BB	MWG PRESSURE VESSEL 9X48 2.5″ BLUE	43	412		
BMWG10017BB	MWG PRESSURE VESSEL 10X17 2.5″ BLUE	43	412		
BMWG10019BB	MWG PRESSURE VESSEL 10X19 2.5″ BLUE	43	412		
BMWG10024BB	MWG PRESSURE VESSEL 10X24 2.5″ BLUE	43	412		
BMWG10030BB	MWG PRESSURE VESSEL 10X30 2.5″ BLUE	43	412		
BMWG10035BB	MWG PRESSURE VESSEL 10X35 2.5″ BLUE	43	412		
BMWG10044BB	MWG PRESSURE VESSEL 10X44 2.5″ BLUE	43	412		
BMWG10047BB	MWG PRESSURE VESSEL 10X47 2.5″ BLUE	43	412		
BMWG10054BB	MWG PRESSURE VESSEL 10X54 2.5″ BLUE	43	412		
BMWG10054GB	MWG PRESSURE VESSEL 10X54 4″ BLUE	43	412		
BMWG12048BB	MWG PRESSURE VESSEL 12X48 2.5″ BLUE	43	412		
BMWG12052BB	MWG PRESSURE VESSEL 12X52 2.5″ BLUE	43	412		
BMWG13044BB	MWG PRESSURE VESSEL 13X44 2.5″ BLUE	43	412		
BMWG13054BB	MWG PRESSURE VESSEL 13X54 2.5″ BLUE	43	412		
BMWG13054GB	MWG PRESSURE VESSEL 13X54 4″ BLUE	43	412		

MWG Residential Pressure Vessels with Base

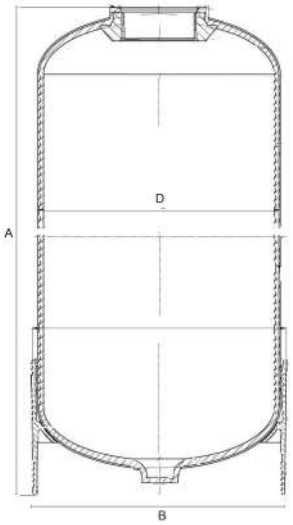

Characteristics

Ref	Volume (Liters)	External D (mm)	A (mm)	B (mm)	Connection
BMWG05013BB	3,1	130	335 ± 6	135	2½
BMWG06013BB	4,7	155	335 ± 6	165	2½
BMWG06018BB	7,0	155	460 ± 6	165	2½
BMWG06035BB	14,8	155	892 ± 6	165	2½
BMWG07013BB	6,1	180	335 ± 6	188	2½
BMWG07017BB	8,4	180	435 ± 6	188	2½
BMWG07024BB	12,4	180	605 ± 6	188	2½
BMWG07030BB	16,1	180	770 ± 6	188	2½
BMWG07035BB	18,8	180	892 ± 6	188	2½
BMWG08013BB	7,8	207	332 ± 6	216	2½
BMWG08017BB	10,8	207	435 ± 6	216	2½
BMWG08024BB	16,4	207	620 ± 6	216	2½
BMWG08030BB	20,8	207	768 ± 6	216	2½
BMWG08035BB	24,5	207	892 ± 6	216	2½
BMWG08044BB	31,2	207	1125 ± 6	216	2½
BMWG09017BB	13,8	231	450 ± 6	240	2½
BMWG09030BB	26,9	231	770 ± 6	240	2½
BMWG09035BB	32,1	231	895 ± 6	240	2½
BMWG09042BB	38,4	231	1070 ± 6	240	2½
BMWG09048BB	44,4	231	1221 ± 6	240	2½
BMWG10017BB	16,7	258	440 ± 6	266	2½
BMWG10019BB	19,3	258	479 ± 6	266	2½
BMWG10024BB	25,2	258	605 ± 6	266	2½
BMWG10030BB	33,0	258	775 ± 6	266	2½
BMWG10035BB	39,4	258	896 ± 6	266	2½
BMWG10044BB	51	258	1128 ± 6	266	2½
BMWG10047BB	54	258	1190 ± 6	266	2½
BMWG10054BB	63	258	1385 ± 6	266	2½
BMWG10054GB	63	258	1385 ± 6	266	4"
BMWG12048BB	78	310	1234 ± 6	318	2½
BMWG12052BB	84,5	310	1334 ± 6	318	2½
BMWG13044BB	82	335	1118 ± 6	343	2½
BMWG13054BB	103	335	1375 ± 6	343	2½
BMWG13054GB	103	335	1375 ± 6	343	4"

Certificates	Manufacturer	Sectors
DM174-2004, ACS, KTW CE, EAC	**MWG**	Domestic

Spare Parts for MWG Pressure Vessels

Bases for MWG Pressure Vessels

Ref.	Description	Fam.	Subfam.		
BMWGS08	MWG STANDARD BASE 8″	43	196		
BMWGS09	MWG STANDARD BASE 9″	43	196		
BMWGS10	MWG STANDARD BASE 10″	43	196		

Structural Residential Pressure Vessels with Base

- Made in European Union (Belgium):
- Composite pressure vessels PE liner reinforced with fiberglass and epoxy resin; For industrial and potable water treatment systems;
- Max operating pressure 10 bar;
- Max operating temperature 50°C;
- Top connection threaded 2 ½" – 8NPSM or 4"– 8UN;
- Cycle test 250.000 times from 0,7 to 10 bar;
- Burst test to 4 times max operating pressure;
- Blue colour;
- Warranty 5 years.

Ref	Description	Fam.	Subfam.		
BSQ0618A3	STRUCTURAL PRESSURE VESSEL 6X18 2.5″ BLUE	43	432		
BSRT0635P3E	STRUCTURAL PRESSURE VESSEL 6X35 2.5″ BLUE	43	432		
BSQ0735A3	STRUCTURAL PRESSURE VESSEL 7X35 2.5″ BLUE	43	432		
BSQ0817A3	STRUCTURAL PRESSURE VESSEL 8X17 2.5″ BLUE	43	432		
BSQ0835A3	STRUCTURAL PRESSURE VESSEL 8X35 2.5″ BLUE	43	432		
BSQ0844P3	STRUCTURAL PRESSURE VESSEL 8X44 2.5″ BLUE	43	432		
BSQ0935A3	STRUCTURAL PRESSURE VESSEL 9X35 2.5″ BLUE	43	432		
BSQ1019A3	STRUCTURAL PRESSURE VESSEL 10X19 2.5″ BLUE	43	432		
BSQ1035A3	STRUCTURAL PRESSURE VESSEL 10X35 2.5″ BLUE	43	432		
BSQ1044P3	STRUCTURAL PRESSURE VESSEL 10X44 2.5″ BLUE	43	432		
BSQ1054P3	STRUCTURAL PRESSURE VESSEL 10X54 2.5″ BLUE	43	432		
BSQ1248P3	STRUCTURAL PRESSURE VESSEL 12X48 2.5″ BLUE	43	432		
BSQ1252P3	STRUCTURAL PRESSURE VESSEL 12X52 2.5″ BLUE	43	432		
BSQ1354A3	STRUCTURAL PRESSURE VESSEL 13X54 2.5″ BLUE	43	432		

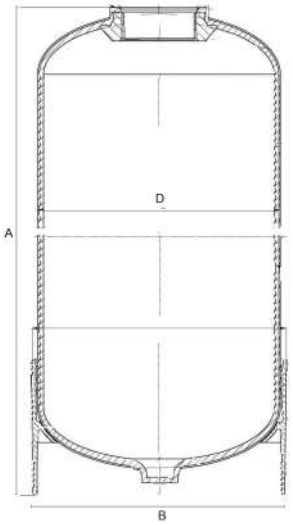

Ref	Volume (liters)	External D (mm)	A (mm)	B (mm)	Connection
BSQ0618A3	6,9	159	475 ± 2	170	2½
BSRT0635P3E	14,4	159	907 ± 2	170	2½
BSQ0735A3	20,4	184	901 ± 2	195	2½
BSQ0817A3	11,0	208	435 ± 2	220	2½
BSQ0835A3	25,7	208	902 ± 2	220	2½
BSQ0844P3	33,6	208	1124 ± 2	220	2½
BSQ0935A3	31,3	233	903 ± 2	240	2½
BSQ1019A3	19,1	257	502 ± 2	269	2½
BSQ1035A3	38,9	257	903 ± 2	269	2½
BSQ1044P3	48	257	1122 ± 2	269	2½
BSQ1054P3	61	257	1385 ± 2	269	2½
BSQ1248P3	76	304	1232 ± 3	315	2½
BSQ1252P3	84	304	1335 ± 3	315	2½
BSQ1354A3	103	334	1371 ± 3	330	2½

Certificates	Manufacturer	Sectors
DM174-2004, ACS, KTW, WRAS, CE, EAC	Pentair	Domestic

MWG Residential Pressure Vessels without Base

- Made in China:
- Composite pressure vessels PE liner reinforced with fiberglass and epoxy resin;
- For industrial and potable water treatment systems;
- Max operating temperature 50°C;
- Top connection threaded 2 ½” – 8NPSM or 4”– 8UN;
- Cycle test 100.000 times from 0 to 10,5 bar;
- Burst test to 4 times max operating pressure;
- Blue colour;
- Warranty 10 years.

Ref	Description	Fam.	Subfam.		
BMWG05013AB	MWG PRESSURE VESSEL 5X13 2.5″ NO BASE BLUE	43	410		
BMWG05017AB	MWG PRESSURE VESSEL 5X17 2.5″ NO BASE BLUE	43	410		
BMWG05024AB	MWG PRESSURE VESSEL 5X24 2.5″ NO BASE BLUE	43	410		
BMWG06013AB	MWG PRESSURE VESSEL 6X13 2.5″ NO BASE BLUE	43	410		
BMWG06017AB	MWG PRESSUR VESSEL 6X17 2.5″ NO BASE BLUE	43	410		
BMWG06024AB	MWG PRESSURE VESSEL 6X24 2.5″ NO BASE BLUE	43	410		
BMWG07013AB	MWG PRESSURE VESSEL 7X13 2.5″ NO BASE BLUE	43	410		
BMWG07017AB	MWG PRESSURE VESSEL 7X17 2.5″ NO BASE BLUE	43	410		
BMWG07019AB	MWG PRESSURE VESSEL 7X19 2.5″ NO BASE BLUE	43	410		
BMWG07024AB	MWG PRESSURE VESSEL 7X24 2.5″ NO BASE BLUE	43	410		
BMWG07030AB	MWG PRESSURE VESSEL 7X30 2.5″ NO BASE BLUE	43	410		
BMWG07035AB	MWG PRESSURE VESSEL 7X35 2.5″ NO BASE BLUE	43	410		
BMWG08013AB	MWG PRESSURE VESSEL 8X13 2.5″ NO BASE BLUE	43	410		
BMWG08017AB	MWG PRESSURE VESSEL 8X17 2.5″ NO BASE BLUE	43	410		
BMWG08024AB	MWG PRESSURE VESSEL 8X24 2.5″ NO BASE BLUE	43	410		
BMWG08030AB	MWG PRESSURE VESSEL 8X30 2.5″ NO BASE BLUE	43	410		
BMWG08035AB	MWG PRESSURE VESSEL 8X35 2.5″ NO BASE BLUE	43	410		
BMWG09017AB	MWG PRESSURE VESSEL 9X17 2.5″ NO BASE BLUE	43	410		
BMWG09024AB	MWG PRESSURE VESSEL 9X24 2.5″ NO BASE BLUE	43	410		
BMWG09030AB	MWG PRESSURE VESSEL 9X30 2.5″ NO BASE BLUE	43	410		
BMWG09035AB	MWG PRESSURE VESSEL 9X35 2.5″ NO BASE BLUE	43	410		
BMWG10017AB	MWG PRESSURE VESSEL 10X17 2.5″ NO BASE BLUE	43	410		
BMWG10019AB	MWG PRESSURE VESSEL 10X19 2.5″ NO BASE BLUE	43	410		
BMWG10024AB	MWG PRESSURE VESSEL 10X24 2.5″ NO BASE BLUE	43	410		
BMWG10030AB	MWG PRESSURE VESSEL 10X30 2.5″ NO BASE BLUE	43	410		
BMWG10035AB	MWG PRESSURE VESSEL 10X35 2.5″ NO BASE BLUE	43	410		

MWG Residential Pressure Vessels without Base

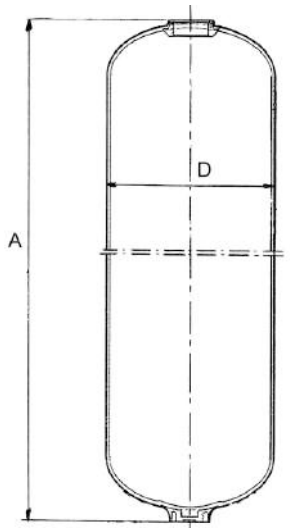

Ref	Volume (liters)	External D (mm)	A (mm)	Connection (inch)
BMWG05013AB	3,1	129	329 ± 3	2½
BMWG05017AB	4,3	129	431 ± 3	2½
BMWG05024AB	6,4	129	611 ± 3	2½
BMWG06013AB	4,7	159	329 ± 3	2½
BMWG06017AB	6,5	159	431 ± 3	2½
BMWG06024AB	9,8	159	611 ± 3	2½
BMWG07013AB	5,9	180	329 ± 3	2½
BMWG07017AB	8,2	180	431 ± 3	2½
BMWG07019AB	9,4	180	483 ± 3	2½
BMWG07024AB	12,4	180	611 ± 3	2½
BMWG07030AB	16,1	180	771 ± 3	2½
BMWG07035AB	18,9	180	891 ± 3	2½
BMWG08013AB	7,6	207	329 ± 3	2½
BMWG08017AB	10,7	207	431 ± 3	2½
BMWG08024AB	16,3	207	611 ± 3	2½
BMWG08030AB	21,2	207	771 ± 3	2½
BMWG08035AB	25,0	207	891 ± 3	2½
BMWG09017AB	13,3	230	431 ± 3	2½
BMWG09024AB	20,3	230	611 ± 3	2½
BMWG09030AB	26,5	230	771 ± 3	2½
BMWG09035AB	31,1	230	891 ± 3	2½
BMWG10017AB	16,4	257,5	431 ± 3	2½
BMWG10019AB	19,0	257,5	483 ± 3	2½
BMWG10024AB	25,2	257,5	611 ± 3	2½
BMWG10030AB	33,0	257,5	771 ± 3	2½
BMWG10035AB	38,8	257,5	891 ± 3	2½

Certificates	Manufacturer	Sectors
DM174-2004 ACS KTW CE, EAC	**MWG**	Domestic

MWG Industrial Pressure Vessels With Threaded Top Opening

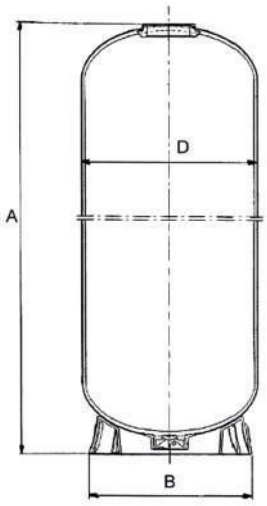

- Made in China; Composite pressure vessels PE liner reinforced with fiberglass and epoxy resin;
- For industrial and potable water treatment systems; Cycle test 100.000 times from 0 to 10,5 bar;
- European 2014/68/EU Directive compliant for pressure equipment (PED);
- Max operating pressure 10 bar; Max operating temperature 50°C; Burst test to 4 times max operating pressure; Warranty 5 Yrs;
- Pressure vessels 16" and less are shipped with reduction 2,5";
- Pressure vessels 30" and greater are shipped with vacuum breaker.

Ref	Description	Fam.	Subfam.		
BMWG14052GB	MWG PRESSURE VESSEL 14X52 4″ BLUE WITH ADAPTER 2.5″	44	420		
BMWG14065GB	MWG PRESSURE VESSEL 14X65 4″ BLUE WITH ADAPTER 2.5″	44	420		
BMWG16052GB	MWG PRESSURE VESSEL 16X52 4″ BLUE WITH ADAPTER 2.5″	44	420		
BMWG16065GB	MWG PRESSURE VESSEL 16X65 4″ BLUE WITH ADAPTER 2.5″	44	420		
BMWG18053GB	MWG PRESSURE VESSEL 18X53 4″ BLUE	44	420		
BMWG18065GB	MWG PRESSURE VESSEL 18X65 4″ BLUE	44	420		
BMWG21036GB	MWG PRESSURE VESSEL 21X36 4″ BLUE	44	420		
BMWG21053GB	MWG PRESSURE VESSEL 21X53 4″ BLUE	44	420		
BMWG21062GB	MWG PRESSURE VESSEL 21X62 4″ BLUE	44	420		
BMWG24065GB	MWG PRESSURE VESSEL 24X65 4″ BLUE	44	420		
BMWG24072GB	MWG PRESSURE VESSEL 24X72 4″ BLUE	44	420		
BMWG30072GB	MWG PRESSURE VESSEL 30X72 4″ BLUE	44	420		
BMWG36072GB	MWG PRESSURE VESSEL 36X72 4″ BLUE	44	420		

Ref	Volume (Liters)	External D (mm)	A (mm)	B (mm)	Connection (Inch)
BMWG14052GB	112	360	1325 ± 6	369	4"
BMWG14065GB	142	360	1657 ± 6	369	4"
BMWG16052GB	147	410	1312 ± 6	420	4"
BMWG16065GB	188	410	1648 ± 6	420	4"
BMWG18053GB	189	464	1366 ± 6	451	4"
BMWG18065GB	236	464	1670 ± 6	451	4"
BMWG21036GB	167	540	958 ± 10	532	4"
BMWG21053GB	258	540	1390 ± 10	532	4"
BMWG21062GB	307	540	1620 ± 10	532	4"
BMWG24065GB	424	615	1720 ± 10	612	4"
BMWG24072GB	474	615	1900 ± 10	612	4"
BMWG30072GB	716	767	1890 ± 10	752	4"
BMWG36072GB	1008	920	1965 ± 10	910	4"

Ref	Box: WxLxH.	Box: Q.ty	Box: Weight.	Pallet: WxLxH.	Pallet: Q.ty	Pallet: Weight.
BMWG14052GB						
BMWG14065GB						
BMWG16052GB						
BMWG16065GB						
BMWG18053GB						
BMWG18065GB						
BMWG21036GB						
BMWG21053GB						
BMWG21062GB						
BMWG24065GB						
BMWG24072GB						
BMWG30072GB						
BMWG36072GB						

Certificates	Manufacturer	Sectors
DM174-2004 ACS KTW CE, EAC	**MWG**	Commercial, Industrial

Structural Industrial Pressure Vessels With Threaded Top Opening

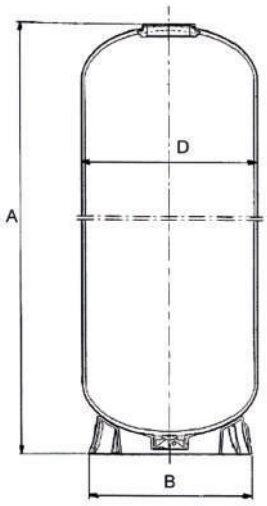

- Made in European Union (Belgium); composite pressure vessels PE liner reinforced with fiberglass and epoxy resin; for industrial and potable water treatment systems;
- European 2014/68/EU Directive compliant for pressure equipment (PED);
- Max operating pressure 10 bar; Max operating temperature 50°C;
- Threaded top connection 4”– 8UN;
- Cycle test 250.000 times from 0,7 to 10 bar; burst test to 4 times max operating pressure; Warranty 5 years;
- Pressure vessels 30" and greater are shipped with vacuum breaker.

Ref	Description	Fam.	Subfam.		
BSRT1452A3REN	STRUCTURAL PRESSURE VESSEL 14X52 4″ BLUEPTER 2.5″	44	440		
BSRT1465A3REN	STRUCTURAL PRESSURE VESSEL 14X65 4″ BLUEPTER 2.5″	44	440		
BSRT1649A3REN	STRUCTURAL PRESSURE VESSEL 16X49 4″ BLUEPTER 2.5″	44	440		
BSRT1665A3REN	STRUCTURAL PRESSURE VESSEL 16X65 4″ BLUEPTER 2.5″	44	440		
BSRT1865A3EN	STRUCTURAL PRESSURE VESSEL 18X65 4″ BLUE	44	440		
BSRT2160A3E	STRUCTURAL PRESSURE VESSEL 21X60 4″ BLUE	44	440		

Ref	Volume (liters)	External D (mm)	A (mm)	B (mm)	Connection (Inch)
BSRT1452A3REN	122	369	1360 ± 20	330	4"
BSRT1465A3REN	140	369	1645 ± 20	380	4"
BSRT1649A3REN	125	406	1269 ± 20	420	4"
BSRT1665A3REN	170	406	1632 ± 20	420	4"
BSRT1865A3EN	250	469	1726 ± 20	510	4"
BSRT2160A3E	307	552	1630 ± 20	510	4"

Ref	Box: WxLxH.	Box: Q.ty	Box: Weight.	Pallet: WxLxH.	Pallet: Q.ty	Pallet: Weight.
BSRT1452A3REN						
BSRT1465A3REN						
BSRT1649A3REN						
BSRT1665A3REN						
BSRT1865A3EN						
BSRT2160A3E						

Certificates	Manufacturer	Sectors
DM174-2004 ACS KTW WRAS CE, EAC	Pentair	Commercial, Industrial

MWG Industrial Pressure Vessels With Top&Bottom Threaded Openings

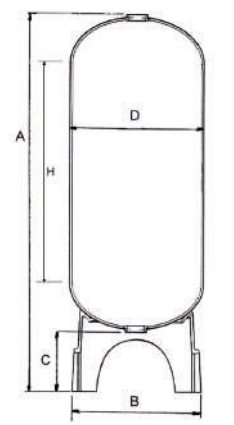

- Made in China;
- Composite pressure vessels PE liner reinforced with fiberglass and epoxy resin;
- For industrial and potable water treatment systems;
- European 2014/68/EU Directive compliant for pressure equipment (PED);
- Max operating pressure 10 bar;
- Max operating temperature 50°C;
- Top and bottom threaded connection 4”– 8UN; Cycle test 100.000 times from 0 to 10,5 bar;
- Burst test to 4 times max operating pressure;
- Blue colour;
- Warranty 5 years;
- Pressure vessels 30" and greater are shipped with vacuum breaker.

Ref	Description	Fam.	Subfam.		
BMWG14065HB	MWG PRESSURE VESSEL 14X65 4″ + 4″ BLUE	44	420		
BMWG16065HB	MWG PRESSURE VESSEL 16X65 4″ + 4″ BLUE	44	420		
BMWG18065HB	MWG PRESSURE VESSEL 18X65 4″ + 4″ BLUE	44	420		
BMWG21062HB	MWG PRESSURE VESSEL 21X62 4″ + 4″ BLUE	44	420		
BMWG24065HB	MWG PRESSURE VESSEL 24X65 4″ + 4″ BLUE	44	420		
BMWG24072HB	MWG PRESSURE VESSEL 24X72 4″ + 4″ BLUE	44	420		
BMWG30072HB	MWG PRESSURE VESSEL 30X72 4″ + 4″ BLUE	44	420		
BMWG36072HB	MWG PRESSURE VESSEL 36X72 4″ + 4″ BLUE	44	420		

Ref	Volume (Liters)	External D (mm)	A (mm)	B (mm)	C (mm)	H (mm)	Connection (Inch)
BMWG14065HB	148,5	360	1856 ± 6	369	230	1386	4"
BMWG16065HB	192	410	1880 ± 6	430	250	1365	4"
BMWG18065HB	236	464	1950 ± 10	480	320	1330	4"
BMWG21062HB	307	540	1902 ± 10	555	330	1220	4"
BMWG24065HB	424	615	1916 ± 10	610	246	1220	4"
BMWG24072HB	474	615	2090 ± 10	610	240	1400	4"
BMWG30072HB	716	767	2077 ± 10	762	235	1270	4"
BMWG36072HB	1008	920	2200 ± 10	930	350	1170	4"

Ref	Box: WxLxH.	Box: Q.ty	Box: Weight.	Pallet: WxLxH.	Pallet: Q.ty	Pallet: Weight.
BMWG14065HB						
BMWG16065HB						
BMWG18065HB						
BMWG21062HB						
BMWG24065HB						
BMWG24072HB						
BMWG30072HB						
BMWG36072HB						

Certificates	Manufacturer	Sectors
DM174-2004 ACS KTW CE, EAC	**MWG**	Commercial, Industrial

Structural Industrial Pressure Vessels With Top&Bottom Threaded Openings

- Made in European Union (Belgium);
- Composite pressure vessels PE liner reinforced with fiberglass and epoxy resin;
- For industrial and potable water treatment systems;
- European 2014/68/EU Directive compliant for pressure equipment (PED);
- Max operating pressure 10 bar;
- Max operating temperature 50°C;
- Top and bottom threaded connection 4”– 8UN;
- Cycle test 250.000 times from 0,7 to 10 bar;
- Burst test to 4 times max operating pressure;
- Blue colour;
- Warranty 5 years;
- Pressure vessels 30" and greater are shipped with vacuum breaker.

Ref	Description	Fam.	Subfam.		
BSRT1865F7E	STRUCTURAL PRESSURE VESSEL 18X65 4˝ + 4˝ BLUE	44	440		
BSRT2160F7E	STRUCTURAL PRESSURE VESSEL 21X60 4˝ + 4˝ BLUE	44	440		
BSRT2469F7E	STRUCTURAL PRESSURE VESSEL 24X69 4˝ + 4˝ BLUE	44	440		
BSRT3072F7E	STRUCTURAL PRESSURE VESSEL 30X72 4˝ + 4˝ BLUE	44	440		
BSRT3672F7E	STRUCTURAL PRESSURE VESSEL 36X72 4˝ + 4˝ BLUE	44	440		

Ref	Volume (liters)	External D (mm)	A (mm)	B (mm)	C (mm)	H (mm)	Connection (Inch)
BSRT1865F7E	247	473	1885 ± 20	539	217	1342	4"
BSRT2160F7E	310	552	1923 ± 20	539	389	1155	4"
BSRT2469F7E	440	610	2169 ± 20	620	422	1327	4"
BSRT3072F7E	710	770	2248 ± 30	816	413	1313	4"
BSRT3672F7E	1020	927	2305 ± 30	1001	408	1266	4"

Ref	Box: WxLxH.	Box: Q.ty	Box: Weight.	Pallet: WxLxH.	Pallet: Q.ty	Pallet: Weight.
BSRT1865F7E						
BSRT2160F7E						
BSRT2469F7E						
BSRT3072F7E						
BSRT3672F7E						

Certificates	Manufacturer	Sectors
DM174-2004 ACS KTW WRAS CE, EAC	Pentair	Commercial, Industrial

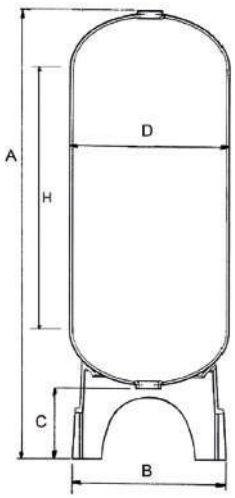

MWG Pressure Vessels With Flanged Top Opening

- Made in China;
- Composite pressure vessels PE liner reinforced with fiberglass and epoxy resin;
- For industrial and potable water treatment systems;
- European 2014/68/EU Directive compliant for pressure equipment (PED);
- Max operating pressure 10 bar;
- Max operating temperature 50°C;
- 6” top connection;
- Cycle test 100.000 times from 0 to 10,5 bar;
- Burst test to 4 times max operating pressure;
- Blue colour;
- Warranty 5 years;
- Pressure vessels 30" and greater are shipped with vacuum breaker.

Ref	Description	Fam.	Subfam.		
BMWG18068LB	MWG PRESSURE VESSEL 18X68 6″ BLUE	44	422		
BMWG21066LB	MWG PRESSURE VESSEL 21X66 6″ BLUE	44	422		
BMWG24075LB	MWG PRESSURE VESSEL 24X75 6″ BLUE	44	422		
BMWG30078LB	MWG PRESSURE VESSEL 30X78 6″ BLUE	44	422		
BMWG36078LB	MWG PRESSURE VESSEL 36X78 6″ BLUE	44	422		

Ref	Volume (Liters)	External D (mm)	A (mm)	B (mm)	H (mm)	Connection (Inch)
BMWG18068LB	264	469	1850 ± 25	451	1451	6"
BMWG21066LB	322	544	1745 ± 25	530	1254	6"
BMWG24075LB	460	617	1905 ± 25	612	1404	6"
BMWG30078LB	781	772	2060 ± 25	752	1485	6"
BMWG36078LB	1136	923	2170 ± 25	910	1428	6"

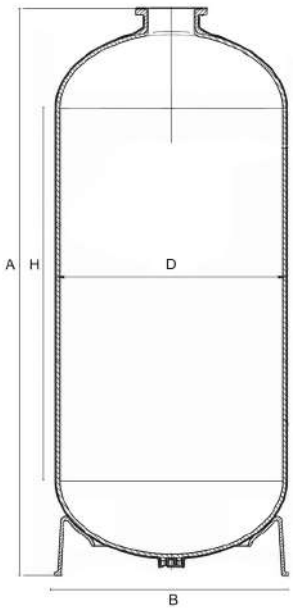

Ref	Box: WxLxH.	Box: Q.ty	Box: Weight.	Pallet: WxLxH.	Pallet: Q.ty	Pallet: Weight.
BMWG18068LB						
BMWG21066LB						
BMWG24075LB						
BMWG30078LB						
BMWG36078LB						

Certificates	Manufacturer	Sectors
DM174-2004 ACS KTW CE, EAC	**MWG**	Industrial

Structural Industrial Pressure Vessels With Flanged Top Opening

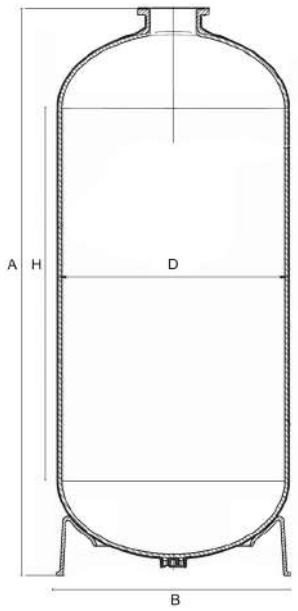

- Made in European Union (Belgium);
- Composite pressure vessels PE liner reinforced with fiberglass and epoxy resin;
- For industrial and potable water treatment systems;
- European 2014/68/EU Directive compliant for pressure equipment (PED);
- Max operating pressure 10 bar;
- Max operating temperature 65°C;
- 6” top connection;
- Cycle test 250.000 times from 0,7 to 10 bar;
- Burst test to 4 times max operating pressure;
- Blue colour;
- Warranty 5 years;
- Pressure vessels 30" and greater are shipped with vacuum breaker.

Ref	Description	Fam.	Subfam.		
BSRT1868A3E	STRUCTURAL PRESSURE VESSEL 18X68 6″ BLUE	44	442		

Ref	Volume (Liters)	External D (mm)	A (mm)	B (mm)	H (mm)	Connection (Inch)
BSRT1868A3E	246	473	1785 ± 20	516	1337	6"

Ref	Box: WxLxH.	Box: Q.ty	Box: Weight.	Pallet: WxLxH.	Pallet: Q.ty	Pallet: Weight.
BSRT1868A3E						

Certificates	Manufacturer	Sectors
DM174-2004 ACS KTW WRAS CE, EAC	Pentair	Industrial

MWG Industrial Pressure Vessels With Flanged Top&Bottom Openings

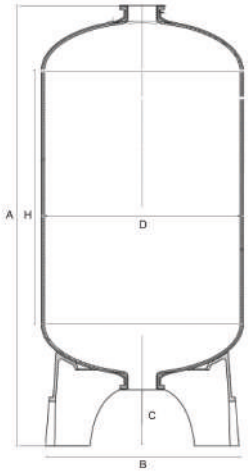

- Made in China;
- Composite pressure vessels PE liner reinforced with fiberglass and epoxy resin;
- For industrial and potable water treatment systems;
- European 2014/68/EU Directive compliant for pressure equipment (PED);
- Max operating pressure 10 bar;
- Max operating temperature 50°C;
- Top and bottom 6” flange connection;
- Cycle test 100.000 times from 0 to 10,5 bar;
- Burst test to 4 times max operating pressure; Blue colour;
- Warranty 5 years;
- Pressure vessels 30" and greater are shipped with vacuum breaker;
- For 63" pressure vessels, when you use a DN100 lower system, you have to raise the pressure vessel.

Ref	Description	Fam.	Subfam.		
BMWG18068MB	MWG PRESSURE VESSEL 18X68 6″+ 6″ BLUE	44	422		
BMWG21066MB	MWG PRESSURE VESSEL 21X66 6″ + 6″ BLUE	44	422		
BMWG24075MB	MWG PRESSURE VESSEL 24X75 6″ + 6″ BLUE	44	422		
BMWG30072MB	MWG PRESSURE VESSEL 30X72 6″ + 6″ BLUE	44	422		
BMWG36072MB	MWG PRESSURE VESSEL 36X72 6″ + 6″ BLUE	44	422		
BMWG42063MB	MWG PRESSURE VESSEL 42X63 6″+6″ BLUE	44	422		
BMWG42072MB	MWG PRESSURE VESSEL 42X72 6″ + 6″ BLUE	44	422		
BMWG48072MB	MWG PRESSURE VESSEL 48X72 6″ + 6″ BLUE	44	422		
BMWG63067MB	MWG PRESSURE VESSEL 63X67 6″ + 6″ BLUE	44	422		
BMWG63086MB	MWG PRESSURE VESSEL 63X86 6″ + 6″ BLUE	44	422		

Ref	Volume (litres)	External D (mm)	A (mm)	B (mm)	C (mm)	H (mm)	Connection (inch)
BMWG18068MB	264	469	2120 ± 25	480	250	1451	6"
BMWG21066MB	322	544	2010 ± 25	554	260	1254	6"
BMWG24075MB	460	617	2180 ± 25	650	265	1404	6"
BMWG30072MB	716	767	2240 ± 25	815	265	1260	6"
BMWG36072MB	1036	920	2270 ± 25	920	285	1195	6"
BMWG42063MB	1224	1085	2055 ± 25	1070	270	955	6"
BMWG42072MB	1425	1085	2300 ± 25	1070	275	1185	6"
BMWG48072MB	1746	1220	2270 ± 25	1230	260	1110	6"
BMWG63067MB	2623	1620	2050 ± 25	1620	260	660	6"
BMWG63086MB	3417	1620	2480 ± 25	1620	260	1100	6"

Ref	Box: WxLxH.	Box: Q.ty	Box: Weight.	Pallet: WxLxH.	Pallet: Q.ty	Pallet: Weight.
BMWG18068MB						
BMWG21066MB						
BMWG24075MB						
BMWG30072MB						
BMWG36072MB						
BMWG42063MB						
BMWG42072MB						
BMWG48072MB						
BMWG63067MB						
BMWG63086MB						

Certificates	Manufacturer	Sectors
DM174-2004 ACS KTW CE, EAC	**MWG**	Industrial

Structural Industrial Pressure Vessels With Flanged Top&Bottom Openings

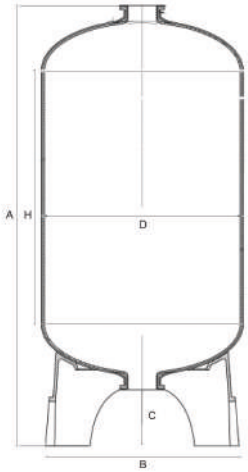

- Made in European Union (Belgium);
- Composite pressure vessels PE liner reinforced with fiberglass and epoxy resin;
- For industrial and potable water treatment systems;
- European 2014/68/EU Directive compliant for pressure equipment (PED);
- Max operating pressure 10 bar;
- Max operating temperature 65°C;
- Top and bottom 6” flange connection;
- Cycle test 250.000 times from 0,7 to 10 bar;
- Burst test to 4 times max operating pressure;
- Blue colour; Warranty 5 years;
- Pressure vessels 30" and greater are shipped with vacuum breaker.

Ref	Description	Fam.	Subfam.		
BSC3678F7	STRUCTURAL PRESSURE VESSEL 36X78 6˝ + 6˝ BLUE	44	442		
BSC4278F7	STRUCTURAL PRESSURE VESSEL 42X78 6˝ + 6˝ BLUE	44	442		
BSC4882F7	STRUCTURAL PRESSURE VESSEL 48X82 6˝ + 6˝ BLUE	44	442		
BSRT6367F7E	STRUCTURAL PRESSURE VESSEL 63X67 6˝ + 6˝ BLUE	44	442		
BSRT6386F7E	STRUCTURAL PRESSURE VESSEL 63X86 6˝ + 6˝ BLUE	44	442		

Ref	Volume (litres)	External D (mm)	A (mm)	B (mm)	C (mm)	H (mm)	Connection (Inch)
BSC3678F7	1026	923	2340 ± 30	955	370	1245	6"
BSC4278F7	1325	1068	2425 ± 40	1092	435	1140	6"
BSC4882F7	1792	1213	2440 ± 40	1270	408	1124	6"
BSRT6367F7E	2414	1620	2345 ± 40	1570	650	573	6"
BSRT6386F7E	3208	1620	2745 ± 40	1570	650	973	6"

Ref	Box: WxLxH.	Box: Q.ty	Box: Weight.	Pallet: WxLxH.	Pallet: Q.ty	Pallet: Weight.
BSC3678F7						
BSC4278F7						
BSC4882F7						
BSRT6367F7E						
BSRT6386F7E						

Certificates	Manufacturer	Sectors
DM174-2004 ACS KTW WRAS CE, EAC	Pentair	Industrial

Pressure Vessels Accessories

Adapters

- adapter 4”– 8UN to 2 ½” – 8NPSM;
- with O-ring.

Ref	Description	Fam.	Subfam.		
PV300	ADAPTER 4˝x2.1/2˝NPSM W/O-RING	45	201		
PV300A	STRUCTURAL ADAPTER 4˝x2.1/2˝ NPSM W/ O-RING - P/NCH4821-2	45	201		
PV300B	ADAPTER 4˝x2.1/2˝ MWG WITH O-RING	45	201		
PV307	PVC ADAPTER 4˝-8UN X 2˝ BSP	45	201		

Ref	Description	Material	Reduction to
PV300	ADAPTER 4˝x2.1/2˝NPSM W/O-RING	PVC machined	2½" - 8 NPSM
PV300A	STRUCTURAL ADAPTER 4˝x2.1/2˝ NPSM W/ O-RING - P/NCH4821-2	PVC-C	2½" - 8 NPSM
PV300B	ADAPTER 4˝x2.1/2˝ MWG WITH O-RING	ABS	2½" - 8 NPSM
PV307	PVC ADAPTER 4˝-8UN X 2˝ BSP	PVC machined	2" BSP

Closures

- closure for 4”– 8UN tanks thread;
- with O-ring.

Ref	Description	Fam.	Subfam.		
PV301	CLOSURE 4˝-8UN W/ O-RING	45	201		

Ref	Description	Material
PV301	CLOSURE 4˝-8UN W/ O-RING	PVC machined

6” closed flange

- Closed flange complete with bolts, nuts, washer and O-ring;
- Flange material PVC;
- Bolts material AISI 304.

Ref	Description	Fam.	Subfam.		
PV510B	6˝ PVC FLANGED CLOSURE W/ O-RING AND SCREWS*	45	201		

6” - 4” adapter

- 6” flanged adapter 4”-8UN, complete with bolts, nuts , washer and O-ring;
- Bolts material AISI 304.

Ref	Description	Fam.	Subfam.		
PV511B	FLANGED ADAPTER 6˝-4˝ 8UN W/ O-RING AND SCREWS*	45	201		

Ref	Description	Adapter material
PV511B	FLANGED ADAPTER 6˝-4˝ 8UN W/ O-RING AND SCREWS*	PVC

Aeration valve & vacuum breaker

- Aeration valve and vacuum breaker in PP;
- Max pressure 10 bar;
- Max temperature 65°C;
- PV308 connection 1 ½”, drain ½”;
- PV308B connection 1”, drain 3/4”.

Ref	Description	Fam.	Subfam.		
PV308	AERATION VALVE AND VACUUM BREAKER 1˝1/2	45	201		
PV308B	MWG AERATION VALVE AND VACUUM BREAKER 1˝	45	201		

Cylindrical diffusors

- Cylindrical diffusor for vessels with 4”- 8UN, for upper or lower installation;
- Outlet connection to glue D.63;
- 0,2 mm slots or 0,5 mm;
- Materials: adapter PVC, diffusor PP;
- Flow 20 m3/h at Δp 0,2 bar;
- A. union D63 (REF. PV329);
- B. adapter 4” with gasket (REF. PV332);
- C. reduction 2” M/F (REF. PV335);
- D. diffusor diameter 85 mm length 180 mm.(REF. PV340 0,2 mm slots – REF. PV342 0,5 mm slots).

Ref	Description	Fam.	Subfam.		
PV351	TOP/BOTTOM CYLINDRICAL DISTRIBUTOR 4˝-8UN D.63 PIPE UNION DIFF. 0,2 MM*	45	201		
PV352	TOP/BOTTOM CYLINDRICAL DISTRIBUTOR 4˝-8UN D.63 PIPE UNION DIFF. 0,5 MM*	45	201		

Ref	Description	Fessure (mm)	Ø Bombole abbinabili
PV351	TOP/BOTTOM CYLINDRICAL DISTRIBUTOR 4˝-8UN D.63 PIPE UNION DIFF. 0,2 MM*	0,2	14” ÷ 36”
PV352	TOP/BOTTOM CYLINDRICAL DISTRIBUTOR 4˝-8UN D.63 PIPE UNION DIFF. 0,5 MM*	0,5	14” ÷ 36”

Certificates	Manufacturer	Sectors
		Industrial

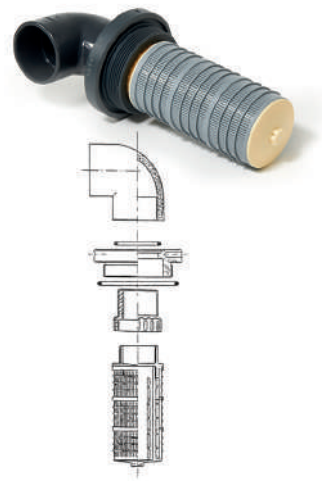

Cylindrical diffusors with elbow

- Cylindrical diffusor for vessel 4”-8UN, for upper installation;
- Outlet connection with elbow to glue D63;
- 0,2 mm slots or 0,5 mm
- Materials: adapter and elbow PVC, diffusor PP;
- Flow 20 m3/h at Δp 0,2 bar;
- Including:
- A. elbow D63 (REF. PV331);
- B. adapter 4” with gasket (REF. PV332);
- C. reduction 2” M/F (REF. PV335);
- D. diffusor con diameter 85 mm length 180 mm (REF.PV340 0,2 mm slots – REF.PV342 0,5 mm slots).

Ref	Description	Fam.	Subfam.		
PV350	TOP CYLINDRICAL DISTRIBUTOR 4˝-8UN X DN63 ELBOW DIFF. 0,2MM*	45	201		
PV349	TOP CYLINDRICAL DISTRIBUTOR 4˝-8UN X DN63 ELBOW DIFF. 0,5MM*	45	201		

Ref	Description	Slots (mm)	Ø Vessel
PV350	TOP CYLINDRICAL DISTRIBUTOR 4˝-8UN X DN63 ELBOW DIFF. 0,2MM*	0,2	14” ÷ 36”
PV349	TOP CYLINDRICAL DISTRIBUTOR 4˝-8UN X DN63 ELBOW DIFF. 0,5MM*	0,5	14” ÷ 36”

Certificates	Manufacturer	Sectors
		Industrial

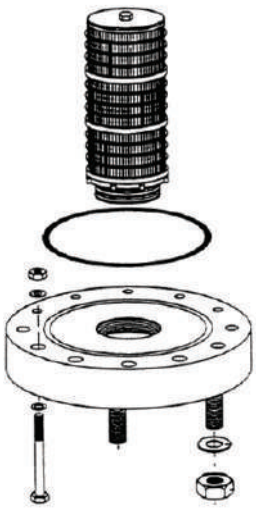

Flanged upper diffusors

- Upper diffusor 6” flanged, complete with bolts, nuts, washer and O-ring;
- Flange material PVC;
- PP cylindrical diffusor 0,2 mm slots or 0,5 mm slots;
- Bolts material AISI 304.

Ref	Description	Fam.	Subfam.		
PV512	TOP CYLINDRICAL DISTRIBUTOR FLANGED 6″ X DN 65 DIFF. 0,2MM - 284 MM*	45	201		
PV514	TOP CYLINDRICAL DISTRIBUTOR FLANGED 6″ X DN80 DIFF. 0,2MM - 240 MM*	45	201		
PV515	TOP CYLINDRICAL DISTRIBUTOR FLANGED 6″ X DN80 DIFF. 0,2 MM - 312 MM*	45	201		
PV553	CYLINDRICAL DISTRIBUTOR FLANGED 6″ DN 80 DIFF. 0,2 MM - 384 MM *	45	201		
PV518	TOP CYLINDRICAL DISTRIBUTOR FLANGED 6″ DN100 DIFF0,2 MM - 384 MM*	45	201		
PV513	TOP CYLINDRICAL DISTRIBUTOR FLANGED 6″ X DN 65 DIFF. 0,5MM - 284 MM*	45	201		
PV516	TOP CYLINDRICAL DISTRIBUTOR FLANGED 6″ DN80 DIFF0,5 MM - 240 MM*	45	201		
PV517	TOP CYLINDRICAL DISTRIBUTOR FLANGED 6″ DN80 DIFF0,5 MM - 312 MM*	45	201		
PV554	CYLINDRICAL DISTRIBUTOR FLANGED 6″ DN 80 DIFF. 0,5 MM - 384 MM *	45	201		
PV519	TOP CYLINDRICAL DISTRIBUTOR FLANGED 6″ DN100 DIFF0,5 MM - 384 MM*	45	201		

Ref	Ø VESSEL	Ø Cylindrical diffusor (mm)	Cylindrical diffusor Lenght (mm)	Slots (mm)	Flow (m³/h) Δp 0,2 bar
PV512	18” ÷ 36”	85	284	0,2	25
PV514	24” ÷ 36”	120	240	0,2	35
PV515	42” ÷ 48”	120	312	0,2	40
PV553	63"	120	384	0,2	45
PV518	63"	120	384	0,2	60
PV513	18” ÷ 36”	85	284	0,5	25
PV516	24” ÷ 36”	120	240	0,5	35
PV517	42” ÷ 48”	120	312	0,5	40
PV554	63"	120	384	0,5	45
PV519	63"	120	384	0,5	60

Certificates	Manufacturer	Sectors
		Industrial

Pressure Vessels Accessories

Cylindrical diffusors

- PP cylindrical diffusor with thread connection 2”, 3” or 4”;
- Slots 0,2 or 0,5 mm.

Ref	Description	Fam.	Subfam.		
PV340	CYLINDRICAL DIFFUSER 2″ L=180-0.2 MM	45	201		
PV339	CYLINDRICAL DIFFUSER 2″ L=284 - 0,2MM	45	201		
PV341	CYLINDRICAL DIFFUSER 2″ L=338 - 0,2MM	45	201		
PV342	CYLINDRICAL DIFFUSER 2″ L=180 - 0,5MM	45	201		
PV343	CYLINDRICAL DIFFUSER 2″ L=284 - 0,5MM	45	201		
PV344	CYLINDRICAL DIFFUSER 2″ L=338 - 0,5MM	45	201		
PV364	CYLINDRICAL DIFFUSER 3″ L=240 - 0,2MM	45	201		
PV365	CYLINDRICAL DIFFUSER 3″ L=312 - 0,2 MM	45	201		
PV366	CYLINDRICAL DIFFUSER 3″ L=384 - 0,2 MM	45	201		
PV367	CYLINDRICAL DIFFUSER 3″ L=240 - 0,5 MM	45	201		
PV368	CYLINDRICAL DIFFUSER 3″ L=312 - 0,5 MM	45	201		
PV369	CYLINDRICAL DIFFUSER 3″ L=384 - 0,5 MM	45	201		
PV393	CYLINDRICAL DIFFUSER 4″ 8UN L=384 - 0,2 MM	45	201		
PV394	CYLINDRICAL DIFFUSER 4″ 8UN L=384 - 0,5 MM	45	201		

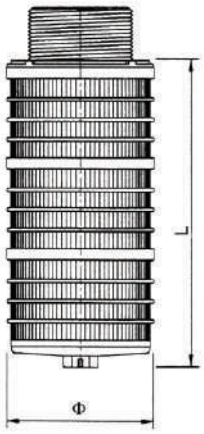

Ref	Connection	Ø Diameter(mm)	Lenght(mm)	Slots (mm)
PV340	2"	85	180	0,2
PV339	2"	85	284	0,2
PV341	2"	85	338	0,2
PV342	2"	85	180	0,5
PV343	2"	85	284	0,5
PV344	2"	85	338	0,5
PV364	3"	120	240	0,2
PV365	3"	120	312	0,2
PV366	3"	120	384	0,2
PV367	3"	120	240	0,5
PV368	3"	120	312	0,5
PV369	3"	120	384	0,5
PV393	4"	120	384	0,2
PV394	4"	120	384	0,5

Certificates	Manufacturer	Sectors
		Industrial

Lower lateral system

- Lower lateral system for vessels with 4” – 8UN opening;
- Outlet connection to glue D63;
- Slots 0,2 or 0,5 mm;
- Materials: adapter PVC, hub and laterals PP;
- Including:
- A. union D63 (REF. PV329);
- B. adapter 4” with O-rings (REF. PV332);
- C. reduction 2” M/F (REF. PV335);
- D. n.3 spacers (REF. PV337);
- E. hub (REF. PV336);
- F. N.5 laterals diameter 54 mm, length = see table.

Ref	Description	Fam.	Subfam.		
PV353	LOWER LATERAL SYSTEM 4″-8UN X D.63 PRES.VES. 14″-16″-18″ SLOTS 0,2 MM*	45	201		
PV354	LOWER LATERAL SYSTEM 4″-8UN X D.63 PRES.VES.21″-24″ SLOTS 0,2 MM*	45	201		
PV355	LOWER LATERAL SYSTEM 4″-8UN X D.63 PRES.VES.30″ SLOTS 0,2 MM*	45	201		
PV356	LOWER LATERAL SYSTEM 4″-8UN X D.63 PRES.VES.36″ SLOTS 0,2 MM*	45	201		
PV360	LOWER LATERAL SYSTEM 4″-8UN X D.63 PRES.VES.14″-16″-18″ SLOTS 0,5MM*	45	201		
PV361	LOWER LATERAL SYSTEM 4″-8UN X D.63 PRES.VES.21″-24″ SLOTS 0,5MM*	45	201		
PV362	LOWER LATERAL SYSTEM 4″-8UN X D.63 PRES.VES.30″ SLOTS 0,5MM*	45	201		
PV363	LOWER LATERAL SYSTEM 4″-8UN X D.63 PRES.VES.36″ SLOTS 0,5MM*	45	201		

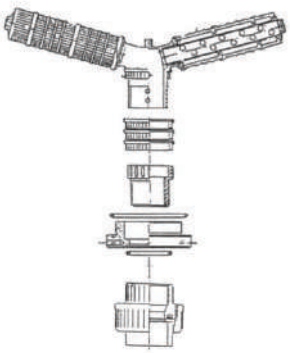

Ref	Slots (mm)	Ø Vessel	Flow(m³/h) Δp 0,2 bar	Lateral lenght (mm)
PV353	0,2	14” - 16” - 18”	17	113
PV354	0,2	21” - 24”	18	175
PV355	0,2	30"	19	237
PV356	0,2	36"	20	299
PV360	0,5	14” - 16” - 18”	17	113
PV361	0,5	21” - 24”	18	175
PV362	0,5	30"	19	237
PV363	0,5	36"	20	299

Certificates	Manufacturer	Sectors
		Industrial

Pressure Vessels Accessories

Lower lateral systems with 6 laterals hub for flanged pressure vessels

- Lower lateral system for 6” flanged pressure vessels;
- Flange material PVC;
- Complete with AISI 304 bolts and washer;
- Hub at 6 laterals;
- Laterals in PP, slots 0,2 or 0,5 mm, length as table below.

Ref	Description	Fam.	Subfam.		
PV520	LOWER LATERAL SYSTEM FLANG. 6″ DN65 PRES.VES. 18″-21″ SLOTS 0,2MM*	45	201		
PV521	LOWER LATERAL SYSTEM FLANG. 6″ DN65 PRES.VES.24″SLOTS 0,2MM*	45	201		
PV522	LOWER LATERAL SYSTEM FLANG. 6″ DN65 PRES.VES.30″SLOTS 0,2MM*	45	201		
PV523	LOWER LATERAL SYSTEM FLANG. 6″ DN65 PRES.VES.36″SLOTS 0,2MM*	45	201		
PV524	LOWER LATERAL SYSTEM FLANG. 6″-DN65 PRES.VES. 18″-21″ DIFF. 0,5MM*	45	201		
PV525	LOWER LATERAL SYSTEM FLANG. 6″ DN65 PRES.VES.24″SLOTS 0,5MM*	45	201		
PV526	LOWER LATERAL SYSTEM FLANG. 6″ DN65 PRES.VES. 30″SLOTS 0,5MM*	45	201		
PV527	LOWER LATERAL SYSTEM FLANG. 6″ DN65 PRES.VES.36″SLOTS 0,5MM*	45	201		

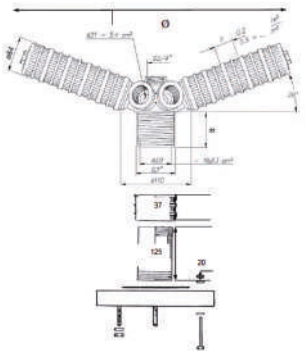

Ref	Ø Vessel	Connection	Lateral lenght (mm)	Ø Diameter (mm)	Slots (mm)	Flow (m³/h) Δ0,2 bar p
PV520	18” - 21”	DN 65	144	374	0,2	22
PV521	24"	DN 65	175	432	0,2	23
PV522	30"	DN 65	237	549	0,2	24
PV523	36"	DN 65	299	665	0,2	25
PV524	18” - 21”	DN 65	144	374	0,5	22
PV525	24"	DN 65	175	432	0,5	23
PV526	30"	DN 65	237	549	0,5	24
PV527	36"	DN 65	299	665	0,5	25

Certificates	Manufacturer	Sectors
		Industrial

Lower lateral systems with 8 laterals hub for flanged pressure vessels

- Lower lateral system for 6” flanged pressure vessels;
- Flange material PVC;
- Complete with AISI 304 bolts and washer;
- Hub at 8 laterals;
- Laterals in PP, slots 0,2 or 0,5 m

Ref	Description	Fam.	Subfam.		
PV522A	LOWER LATERAL SYSTEM FLANG. 6″-DN65 HF PRES.VES.30″ DIFF. 0,2MM*	45	201		
PV523A	LOWER LATERAL SYSTEM FLANG. 6″ DN65 HF PRES.VES.36″ SLOTS 0,2MM*	45	201		
PV528	LOWER LATERAL SYSTEM FLANG. 6″ DN80 PRES.VES.24″SLOTS 0,2MM*	45	201		
PV529	LOWER LATERAL SYSTEM FLANG. 6″ DN80 PRES.VES.30″SLOTS 0,2MM*	45	201		
PV530	LOWER LATERAL SYSTEM FLANG. 6″ DN80 PRES.VES.36″SLOTS 0,2MM*	45	201		
PV526A	LOWER LATERAL SYSTEM FLANG. 6″ DN65 HF PRES.VES.30″ SLOTS 0,5MM*	45	201		
PV527A	LOWER LATERAL SYSTEM FLANG. 6″ DN65 HF PRES.VES.36″ SLOTS 0,5MM*	45	201		
PV531	LOWER LATERAL SYSTEM FLANG. 6″ DN80 PRES.VES.24″SLOTS 0,5MM*	45	201		
PV532	LOWER LATERAL SYSTEM FLANG. 6″ DN80 PRES.VES.30″SLOTS 0,5MM*	45	201		
PV533	LOWER LATERAL SYSTEM FLANG. 6″ DN80 PRES.VES.36″SLOTS 0,5MM*	45	201		

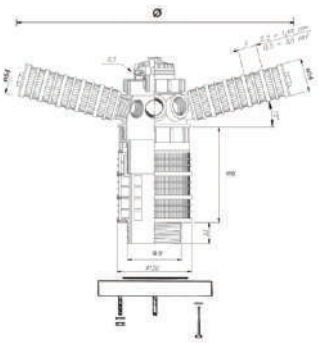

Ref	Ø Vessel	Connection	Lateral lenght (mm)	Ø Diameter	Slots (mm)	Flow (m³/h) Δp 0,2 bar
PV522A	30"	DN 65	237	580	0,2	25
PV523A	36"	DN 65	299	699	0,2	30
PV528	24"	DN 80	175	461	0,2	34
PV529	30"	DN 80	237	580	0,2	36
PV530	36"	DN 80	299	699	0,2	38
PV526A	30"	DN 65	237	580	0,5	25
PV527A	36"	DN 65	299	699	0,5	30
PV531	24"	DN 80	175	461	0,5	34
PV532	30"	DN 80	237	580	0,5	36
PV533	36"	DN 80	299	699	0,5	38

Certificates	Manufacturer	Sectors
		Industrial

Pressure Vessels Accessories

Lower double lateral systems for flanged pressure vessels

- Lower double lateral system for 6” flanged pressure vessels;
- Flange material PVC, bolts in AISI 304;
- Complete with bolts and washer;
- Double hub at 8 + 8 laterals;
- Laterals in PP, slots 0,2 or 0,5 mm, length as table below.

Ref	Description	Fam.	Subfam.		
PV555	LOWER LATERAL SYSTEM FLANG. 6″ DN80 PRES.VES.63″SLOTS 0,2 MM*	45	201		
PV538	LOWER LATERAL SYSTEM FLANG 6″ DN100 PRES. VES. 63″ DIFF 0,2 MM*	45	201		
PV556	LOWER LATERAL SYSTEM FLANG. 6″ DN80 PRES.VES.63″SLOTS 0,5 MM*	45	201		
PV539	LOWER LATERAL SYSTEM FLANG. 6″ DN100 PRES.VES.63″SLOTS 0,5 MM*	45	201		

Ref	Lateral quantity	A (mm)	Slots (mm)	Flow (m3/h) Δp 0,2 bar	Diffusor lenght (mm)	Ø System diameter (mm)
PV555	8 + 8	190	0,2	45	578-640	1239-1359
PV538	8 + 8	190	0,2	60	578-640	1239-1359
PV556	8 + 8	190	0,5	45	578-640	1239-1359
PV539	8 + 8	190	0,5	60	578-640	1239-1359

Certificates	Manufacturer	Sectors
		Industrial

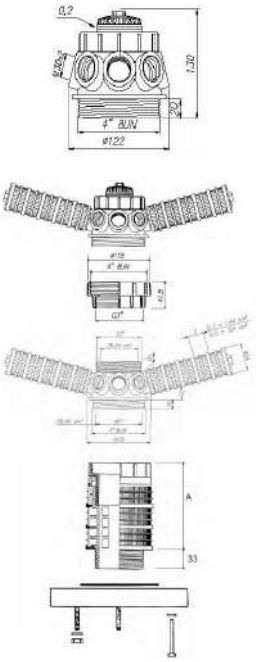

Ref	Description	Fam.	Subfam.		
PV534	LOWER LATERAL SYSTEM FLANG. 6″ DN80 PRES.VES.42″SLOTS 0,2 MM*	45	201		
PV535	LOWER LATERAL SYSTEM FLANG. 6″ DN80 PRES. VES. 48″ DIFF. 0,2 MM*	45	201		
PV536	LOWER LATERAL SYSTEM FLANG. 6″ DN80 PRES.VES.42″SLOTS 0,5 MM*	45	201		
PV537	LOWER LATERAL SYSTEM FLANG. 6″ DN80 PRES.VES.48″SLOTS 0,5 MM*	45	201		

Ref	Lateral quantity	A (mm)	Slots (mm)	Flow (m3/h) Δp 0,2 bar	Diffusor lenght (mm)	Ø Systems (mm)
PV534	8 + 8	150	0,2	38	361-423	819-939
PV535	8 + 8	150	0,2	38	423-485	939-1059
PV536	8 + 8	150	0,5	38	361-423	819-939
PV537	8 + 8	150	0,5	38	423-485	939-1059

Certificates	Manufacturer	Sectors
		Industrial

Pressure Vessels Accessories

Top mount lower lateral systems for flanged pressure vessels

- Lower lateral system for 6” flanged pressure vessels for top mount valve, with 6 laterals;
- Material hub and laterals PP, length as table below;
- Slots 0,2 or 0,5 mm;
- To install with 2” adapter for the needed riser tube diameter.

Ref	Description	Fam.	Subfam.		
PV540	LOWER LATERAL SYSTEM TOP MOUNT PRES.VES. 18″-21″SLOTS 0,2 MM*	45	201		
PV544	LOWER LATERAL SYSTEM TOP MOUNT PRES.VES. 18″-21″SLOTS 0,5 MM*	45	201		

Ref	Ø Vessel	Diffusor lenght (mm)	Ø Diameter (mm)	Slots (mm)	Flow (m³/h) Δp 0,2 bar
PV540	18” - 21”	144	374	0,2	22
PV544	18” - 21”	144	374	0,5	22

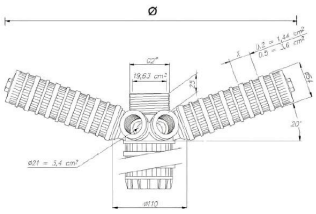

Ref	Description	Fam.	Subfam.		
PV541	LOWER LATERAL SYSTEM TOP MOUNT PRES.VES. 24″ SLOTS 0,2 MM*	45	201		
PV545	LOWER LATERAL SYSTEM TOP MOUNT PRES.VES. 24″ DIFF. 0,5 MM*	45	201		

Ref	Vessel	Diffusor lenght (mm)	Ø Diameter (mm)	Slots (mm)	Flow (m³/h) Δp 0,2 bar
PV541	24"	175	432	0,2	23
PV545	24"	175	432	0,5	23

Certificates	Manufacturer	Sectors
		Industrial

Pressure Vessels Accessories

Ref	Description	Fam.	Subfam.		
PV542	LOWER LATERAL SYSTEM TOP MOUNT PRES.VES. 30″ SLOTS 0,2 MM*	45	201		
PV546	LOWER LATERAL SYSTEM TOP MOUNT PRES.VES. 30″ SLOTS 0,5 MM*	45	201		

Ref	Ø Vessel	Diffusor lenght (mm)	Ø Diameter (mm)	Slots (mm)	Flow (m³/h) Δp 0,2 bar
PV542	30"	237	549	0,2	24
PV546	30"	237	549	0,5	24

Certificates	Manufacturer	Sectors
		Industrial

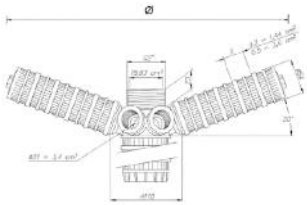

Ref	Description	Fam.	Subfam.		
PV543	LOWER LATERAL SYSTEM TOP MOUNT PRES.VES. 36″ SLOTS 0,2 MM*	45	201		
PV547	LOWER LATERAL SYSTEM TOP MOUNT PRES.VES. 36″ SLOTS 0,5 MM*	45	201		

Ref	Ø Vessel	Diffusor lenght (mm)	Ø Diameter (mm)	Slots (mm)	Flow (m³/h) Δp 0,2 bar
PV543	36"	299	665	0,2	25
PV547	36"	299	665	0,5	25

Certificates	Manufacturer	Sectors
		Industrial

2” gas adapter

- 2” GAS adapters with connection to glue;
- Material PVC.

Ref	Description	Fam.	Subfam.		
PV384	ADAPTER F/F 2″x41,8 MM TO GLUE	45	201		
PV385	ADAPTER F/F 2″x48,3 MM TO GLUE	45	201		
PV386	ADAPTER F/F 2″x50 MM TO GLUE	45	201		
PV387	ADAPTER F/F 2″x63 MM TO GLUE	45	201		

Ref	Description	Connection to glue (mm)
PV384	ADAPTER F/F 2″x41,8 MM TO GLUE	41,8
PV385	ADAPTER F/F 2″x48,3 MM TO GLUE	48,3
PV386	ADAPTER F/F 2″x50 MM TO GLUE	50,0
PV387	ADAPTER F/F 2″x63 MM TO GLUE	63,0

Certificates	Manufacturer	Sectors
		Industrial

Pressure Vessels Accessories

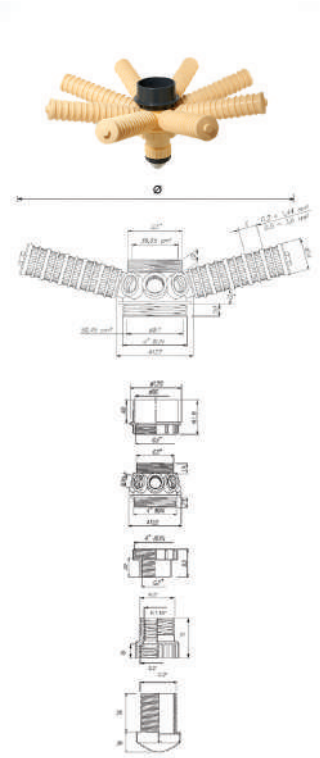

Top mount lower lateral systems for tubes diameter 90 mm

- Lower lateral system for 6” flanged pressure vessels for top mount valve, with 8 laterals;
- Material hub and laterals PP, length as table below;
- Slots 0,2;
- To glue on tube diameter 90 mm.

Ref	Description	Fam.	Subfam.		
PV548	LOWER LATERAL SYSTEM TOP MOUNT PRES.VES. 30″ FORTUBE 90 MM SLOTS 0,2 M	45	201		
PV549	LOWER LATERAL SYSTEM TOP MOUNT PRES.VES. 36″ TUBE90 MM SLOTS 0,2 MM*	45	201		

Ref	Diffusor lenght (mm)	Ø Diameter	Slots (mm)	Flow (m³/h) Δp 0,2 bar
PV548	237	580	0,2	36
PV549	299	699	0,2	38

Certificates	Manufacturer	Sectors
		Industrial

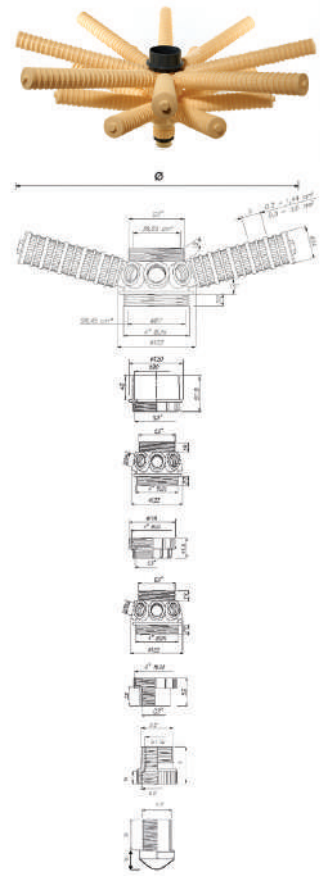

Top mount lower double lateral systems for tubes diameter 90 mm

- Lower lateral system for 6” flanged pressure vessels for top mount valve, with 8+8 laterals;
- Material hub and laterals PP, length as table below;
- Slots 0,2;
- To glue on tube diameter 90 mm.

Ref	Description	Fam.	Subfam.		
PV550	LOWER LATERAL SYSTEM TOP MOUNT PRES.VES. 42″ FORTUBE 90 MM SLOTS 0,2 M	45	201		
PV551	LOWER LATERAL SYSTEM TOP MOUNT PRES.VES. 48″ TUBE90 MM SLOTS 0,2 MM*	45	201		

Ref	Laterals quantity	Lateral lenght (mm)	Ø Diameter (mm)	Slots(mm)	Flow (m³/h) Δp 0,2 bar
PV550	8 + 8	299-423	699-939	0,2	38
PV551	8 + 8	361-485	361-485	0,2	38

Box: WxLxH	Box: Q.ty	Box: Weight	Pallet: WxLxH	Pallet: Q.ty	Pallet: Weight

Certificates	Manufacturer	Sectors
		Industrial

Pressure Vessels Accessories

Cylindrical laterals

- Cylindrical laterals with threaded connection M 30x2;
- Material PP;
- Diameter 54 mm;
- Slots 0,2 or 0,5 mm.

Laterals with 0,2 mm slots

Ref	Description	Fam.	Subfam.		
PV345	LATERAL DIFFUSER M 30 X 2 L=113 - 0,2 MM	45	201		
PV370	LATERAL DIFFUSER M 30X2 L=144 - 0,2 MM	45	201		
PV346	LATERAL DIFFUSER M 30 X 2 L=175 - 0,2 MM	45	201		
PV371	LATERAL DIFFUSER M 30X2 L=206 - 0,2 MM	45	201		
PV347	LATERAL DIFFUSER M 30 X 2 L=237 - 0,2 MM	45	201		
PV348	LATERAL DIFFUSER M 30 X 2 L=299 - 0,2 MM	45	201		
PV372	LATERAL DIFFUSER M 30X2 L=361 - 0,2 MM	45	201		
PV373	LATERAL DIFFUSER M 30X2 L=485 - 0,2 MM	45	201		
PV374	LATERAL DIFFUSER M 30X2 L=485 - 0,2MM	45	201		
PV389	LATERAL DIFFUSER M 30X2 L=578 - 0,2 MM	45	201		
PV391	LATERAL DIFFUSER M30x2 L = 640 MM SLOTS 0,2 MM	45	201		

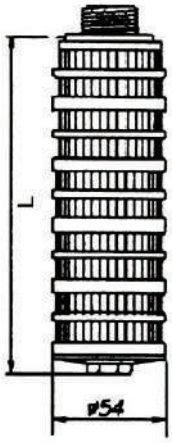

Ref	Description	L (mm)
PV345	LATERAL DIFFUSER M 30 X 2 L=113 - 0,2 MM	113
PV370	LATERAL DIFFUSER M 30X2 L=144 - 0,2 MM	144
PV346	LATERAL DIFFUSER M 30 X 2 L=175 - 0,2 MM	175
PV371	LATERAL DIFFUSER M 30X2 L=206 - 0,2 MM	206
PV347	LATERAL DIFFUSER M 30 X 2 L=237 - 0,2 MM	237
PV348	LATERAL DIFFUSER M 30 X 2 L=299 - 0,2 MM	299
PV372	LATERAL DIFFUSER M 30X2 L=361 - 0,2 MM	361
PV373	LATERAL DIFFUSER M 30X2 L=485 - 0,2 MM	423
PV374	LATERAL DIFFUSER M 30X2 L=485 - 0,2MM	485
PV389	LATERAL DIFFUSER M 30X2 L=578 - 0,2 MM	578
PV391	LATERAL DIFFUSER M30x2 L = 640 MM SLOTS 0,2 MM	640

Certificates	Manufacturer	Sectors
		Industrial

Cylindrical laterals

- Cylindrical laterals with threaded connection M 30x2;
- Material PP;
- Diameter 54 mm;
- Slots 0,2 or 0,5 mm.

Laterals with 0,5 mm slots

Ref	Description	Fam.	Subfam.		
PV375	LATERAL DIFFUSER M 30X2 L=113 - 0,5 MM	45	201		
PV376	LATERAL DIFFUSER M 30X2 L=144 - 0,5 MM	45	201		
PV377	LATERAL DIFFUSER M 30X2 L=175 - 0,5 MM	45	201		
PV378	LATERAL DIFFUSER M 30X2 L=206 - 0,5 MM	45	201		
PV379	LATERAL DIFFUSER M 30X2 L=237 - 0,5 MM	45	201		
PV380	LATERAL DIFFUSER M 30X2 L=299 - 0,5 MM	45	201		
PV381	LATERAL DIFFUSER M 30X2 L=361 - 0,5 MM	45	201		
PV382	LATERAL DIFFUSER M 30X2 L=423 - 0,5 MM	45	201		
PV383	LATERAL DIFFUSER M 30X2 L=485 - 0,5 MM	45	201		
PV390	LATERAL DIFFUSER M30x2 L = 578 - 0,5 MM	45	201		
PV392	LATERAL DIFFUSER M 30X2 L=640 - 0,5 MM	45	201		

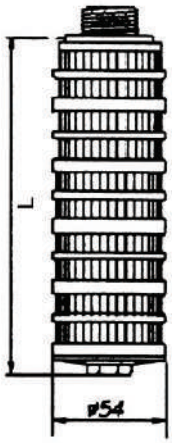

Ref	Description	L (mm)
PV375	LATERAL DIFFUSER M 30X2 L=113 - 0,5 MM	113
PV376	LATERAL DIFFUSER M 30X2 L=144 - 0,5 MM	144
PV377	LATERAL DIFFUSER M 30X2 L=175 - 0,5 MM	175
PV378	LATERAL DIFFUSER M 30X2 L=206 - 0,5 MM	206
PV379	LATERAL DIFFUSER M 30X2 L=237 - 0,5 MM	237
PV380	LATERAL DIFFUSER M 30X2 L=299 - 0,5 MM	299
PV381	LATERAL DIFFUSER M 30X2 L=361 - 0,5 MM	361
PV382	LATERAL DIFFUSER M 30X2 L=423 - 0,5 MM	423
PV383	LATERAL DIFFUSER M 30X2 L=485 - 0,5 MM	485
PV390	LATERAL DIFFUSER M30x2 L = 578 - 0,5 MM	578
PV392	LATERAL DIFFUSER M 30X2 L=640 - 0,5 MM	640

Certificates	Manufacturer	Sectors
		Industrial

Pressure Vessels Accessories

Flange coupling kit

- For 6” flanged pressure vessels;
- Including flange adaptor and coupling flange in PVC;
- With gasket in EPDM.

Ref	Description	Fam.	Subfam.		
PV594M	FLANGE COUPLING KIT DN65-D75-2˝1/2*	45	210		
PV595M	FLANGE COUPLING KIT DN80-D90-3˝*	45	210		
PV596M	FLANGE COUPLING KIT DN100-D110-4˝*	45	210		

Ref	Description	Connection
PV594M	FLANGE COUPLING KIT DN65-D75-2˝1/2*	DN65
PV595M	FLANGE COUPLING KIT DN80-D90-3˝*	DN80
PV596M	FLANGE COUPLING KIT DN100-D110-4˝*	DN100

Certificates	Manufacturer	Sectors
		Industrial

PV295

PV395

Mineral tank funnels

- The tank funnels are designed for filling mineral tanks with granular media and ion exchange resin;
- The funnels are designed to fit 2,5”, 4” and 6” mineral tank openings;
- These economical funnels are nestable to reduce shipping and storage costs;
- The funnel ref. PV395 snaps into a 4” or 6” mineral tank opening for stability when pouring media. The neck of the funnel has been carefully designed to allow trapped air inside the mineral tank to escape when media is poured in. This heavy duty part is blow molded out of high density polyethylene for exceptional strength and durability. The oval design provides an extra wide opening for ease of use when pouring. Handles are molded into the funnel for added convenience.

Ref	Description	Fam.	Subfam.		
PV295	MINERAL TANK FUNNEL 2.5˝	45	196		
PV395	MINERAL TANK FUNNEL 4˝ - 6˝	45	201		

Certificates	Manufacturer	Sectors
		Domestic, Commercial, Industrial

EUROTROL®
WATER TREATMENT COMPONENTS

Cabinets MWG

Back to index

Cabinets for Softeners Mini Cab Series

- Tanks and covers made in European Union (Italy);
- Cabinets for residential softeners, complete with salt lid and cover of exclusive design;
- With MWG tank;
- Materials: tank in HDPE, cover in polystyrene;
- Standard colours: white tank and blue, white or black cover;
- On demand and for quantities we can realize customized colours;
- EU design patent no. 003156272.

(**) minimum order quantity = 250 pcs.

Ref	Description	Fam.	Subfam.	Note	
C0513MWMAS	MWG CAB. MINI CAB WHITE BODY - LIGHT BLUE COVER 5X13*	45	210		
C0513MWMWS	MWG CAB. MINI CAB WHITE BODY - WHITE COVER 5X13*	45	210	(**)	
C0513MWMDS	MWG CAB. MINI CAB WHITE BODY - BLACK COVER 5X13*	45	210	(**)	
C0613MWMAS	MWG CAB. MINI MWG CAB. WHITE BODY - LIGHT BLUE COVER 6X13*	45	210		
C0613MWMWS	MWG CAB. MINI MWG CAB. WHITE BODY - WHITE COVER 6X13*	45	210	(**)	
C0613MWMDS	MWG CAB. MINI MWG CAB. WHITE BODY - BLACK COVER 6X13*	45	210		
C0713MWMAS	MWG CAB. MINI MWG CAB. WHITE BODY - LIGHT BLUE COVER 7X13*	45	210		
C0713MWMWS	MWG CAB. MINI MWG CAB. WHITE BODY - WHITE COVER 7X13*	45	210		
C0713MWMDS	MWG CAB. MINI CAB WHITE BODY - BLACK COVER 7X13*	45	210		

Ref	Width (mm)	Length (mm)	Height (mm)	With MWG tank
C0513MWMAS	220	365	333	5 x 13
C0513MWMWS	220	365	333	5 x 13
C0513MWMDS	220	365	333	5 x 13
C0613MWMAS	220	365	333	6 x 13
C0613MWMWS	220	365	333	6 x 13
C0613MWMDS	220	365	333	6 x 13
C0713MWMAS	220	365	333	7 x 13
C0713MWMWS	220	365	333	7 x 13
C0713MWMDS	220	365	333	7 x 13

Box: WxLxH	Box: Q.ty	Box: Weight	Pallet: WxLxH	Pallet: Q.ty	Pallet: Weight

Certificates	Manufacturer	Sectors
	MWG	Domestic

Cabinets for Softeners New Junior Series

- Tanks and covers made in European Union (Italy);
- Cabinets for residential softeners, complete with salt lid;
- With MWG tank;
- Materials: tank in HDPE, salt lid in polystyrene;
- Standard colours: tank white, salt lid black:
- Different colours available on demand ;
- EU design patent no. 003156272.

(**) minimum order quantity = 250 pcs.

Ref	Description	Fam.	Subfam.	Note	
C0513GWGDX	MWG CAB. NEW JUNIOR 13 WHITE BODY - BLACK COVER 5X13*	45	210	(**)	
C0613GWGDX	MWG CAB. NEW JUNIOR 13 WHITE BODY - BLACK COVER 6X13*	45	210		
C0713GWGDX	MWG CAB. NEW JUNIOR 13 WHITE BODY - BLACK COVER 7X13*	45	210		
C0813GWGDX	MWG CAB. NEW JUNIOR 13 WHITE BODY - BLACK COVER 8X13*	45	210		

Ref	Width (mm)	Length (mm)	Height (mm)
C0513GWGDX	240	435	330
C0613GWGDX	240	435	330
C0713GWGDX	240	435	330
C0813GWGDX	240	435	330

Box: WxLxH	Box: Q.ty	Box: Weight	Pallet: WxLxH	Pallet: Q.ty	Pallet: Weight

Accessories

Ref	Description	Fam.	Subfam.	Note	
PA011	MWG BRINE WELL D=100 MM H=220 MM (CAB. 13″)	45	215		
PA001	MWG CAP FOR BRINE WELL D=100 MM	45	215		

Certificates	Manufacturer	Sectors
	MWG	Domestic

Ref	Description	Fam.	Subfam.	Note	
C0717GWGDX	MWG CAB. NEW JUNIOR 17 WHITE BODY - BLACK COVER 7X17*	45	210		
C0817GWGDX	MWG CAB. NEW JUNIOR 17 WHITE BODY - BLACK COVER 8X17*	45	210		

Ref	Width (mm)	Length (mm)	Height (mm)
C0717GWGDX	240	435	432
C0817GWGDX	240	435	432

Box: WxLxH	Box: Q.ty	Box: Weight	Pallet: WxLxH	Pallet: Q.ty	Pallet: Weight

Accessories

Ref	Description	Fam.	Subfam.	Note	
PA002	MWG BRINE WELL D=100 MM H=340 MM (CAB. 17″)	45	215		
PA001	MWG CAP FOR BRINE WELL D=100 MM	45	215		

Certificates	Manufacturer	Sectors
	MWG	Domestic

Cabinets for Softeners New Junior Series

Ref	Description	Fam.	Subfam.	Note	
C0724GWGDX	MWG CAB. NEW JUNIOR 24 WHITE BODY - BLACK COVER 7X24*	45	210		
C0824GWGDX	MWG CAB. NEW JUNIOR 24 WHITE BODY - BLACK COVER 8X24*	45	210		

Ref	Width (mm)	Length (mm)	Height (mm)
C0724GWGDX	240	435	610
C0824GWGDX	240	435	610

Box: WxLxH	Box: Q.ty	Box: Weight	Pallet: WxLxH	Pallet: Q.ty	Pallet: Weight

Accessories

Ref	Description	Fam.	Subfam.	Note	
PA074	MWG BRINE WELL D=100 MM H=520 MM (CAB. 24″ + BRINE TANK 100L)	45	215		
PA001	MWG CAP FOR BRINE WELL D=100 MM	45	215		

Certificates	Manufacturer	Sectors
	MWG	Domestic

Cabinets for Softeners Slim Line Series

- Tanks and covers made in European Union (Italy);
- Cabinets for residential softeners, complete with salt lid and cover of exclusive design;
- With MWG tank;
- Materials: tank in HDPE, cover in polystyrene;
- Standard colours: white tank and blue, white or black cover;
- On demand and for quantities we can realize customized colours;
- EU design patent no. 003156272.

(**) minimum order quantity = 250 pcs.

Ref	Description	Fam.	Subfam.	Note	
C0717LWSAS	MWG CAB. SLIM LINE WHITE BODY - LIGHT BLUE COVER 7X17*	45	210		
C0717LWSWS	MWG CAB. SLIM LINE WHITE BODY - WHITE COVER 7X17*	45	210	(**)	
C0717LWSDS	MWG CAB. SLIM LINE WHITE BODY - BLACK COVER 7X17*	45	210	(**)	
C0817LWSAS	MWG CAB. SLIM LINE WHITE BODY - LIGHT BLUE COVER 8X17*	45	210		
C0817LWSWS	MWG CAB. SLIM LINE WHITE BODY - WHITE COVER 8X17*	45	210		
C0817LWSDS	MWG CAB. SLIM LINE WHITE BODY - BLACK COVER 8X17*	45	210	(**)	
C0917LWSAS	MWG CAB. SLIM LINE WHITE BODY - LIGHT BLUE COVER 9X17*	45	210		
C0917LWSWS	MWG CAB. SLIM LINE WHITE BODY - WHITE COVER 9X17*	45	210	(**)	
C0917LWSDS	MWG CAB. SLIM LINE WHITE BODY - BLACK COVER 9X17*	45	210	(**)	
C1017LWSAS	MWG CAB. SLIM LINE WHITE BODY - LIGHT BLUE COVER 10X17*	45	210		
C1017LWSWS	MWG CAB. SLIM LINE WHITE BODY - WHITE COVER 10X17*	45	210	(**)	
C1017LWSDS	MWG CAB. SLIM LINE WHITE BODY - BLACK COVER 10X17*	45	210		

Ref	Width (mm)	Length (mm)	Height (mm)
C0717LWSAS	320	500	440
C0717LWSWS	320	500	440
C0717LWSDS	320	500	440
C0817LWSAS	320	500	440
C0817LWSWS	320	500	440
C0817LWSDS	320	500	440
C0917LWSAS	320	500	440
C0917LWSWS	320	500	440
C0917LWSDS	320	500	440
C1017LWSAS	320	500	440
C1017LWSWS	320	500	440
C1017LWSDS	320	500	440

Box: WxLxH	Box: Q.ty	Box: Weight	Pallet: WxLxH	Pallet: Q.ty	Pallet: Weight

Accessories

Ref	Description	Fam.	Subfam.	Note	
PA002	MWG BRINE WELL D=100 MM H=340 MM (CAB. 17″)	45	215		
PA001	MWG CAP FOR BRINE WELL D=100 MM	45	215		

Certificates	Manufacturer	Sectors
	MWG	Domestic

Cabinets for Softeners Slim Line Series

Ref	Description	Fam.	Subfam.	Note	
C0735LWSAS	MWG CAB. SLIM LINE WHITE BODY - LIGHT BLUE COVER 7X35*	45	210	(**)	
C0735LWSWS	MWG CAB. SLIM LINE WHITE BODY - WHITE COVER 7X35*	45	210	(**)	
C0735LWSDS	MWG CAB. SLIM LINE WHITE BODY - BLACK COVER 7X35*	45	210	(**)	
C0835LWSAS	MWG CAB. SLIM LINE WHITE BODY - LIGHT BLUE COVER 8X35*	45	210		
C0835LWSWS	MWG CAB. SLIM LINE WHITE BODY - WHITE COVER 8X35*	45	210	(**)	
C0835LWSDS	MWG CAB. SLIM LINE WHITE BODY - BLACK COVER 8X35*	45	210		
C0935LWSAS	MWG CAB. SLIM LINE WHITE BODY - LIGHT BLUE COVER 9X35*	45	210		
C0935LWSWS	MWG CAB. SLIM LINE WHITE BODY - WHITE COVER 9X35*	45	210	(**)	
C0935LWSDS	MWG CAB. SLIM LINE WHITE BODY - BLACK COVER 9X35*	45	210	(**)	
C1035LWSAS	MWG CAB. SLIM LINE WHITE BODY - LIGHT BLUE COVER 10X35*	45	210		
C1035LWSWS	MWG CAB. SLIM LINE WHITE BODY - WHITE COVER 10X35*	45	210	(**)	
C1035LWSDS	MWG CAB. SLIM LINE WHITE BODY - BLACK COVER 10X35*	45	210		

Ref	Width (mm)	Length (mm)	Height (mm)
C0735LWSAS	320	500	900
C0735LWSWS	320	500	900
C0735LWSDS	320	500	900
C0835LWSAS	320	500	900
C0835LWSWS	320	500	900
C0835LWSDS	320	500	900
C0935LWSAS	320	500	900
C0935LWSWS	320	500	900
C0935LWSDS	320	500	900
C1035LWSAS	320	500	900
C1035LWSWS	320	500	900
C1035LWSDS	320	500	900

Accessories

Ref	Description	Fam.	Subfam.	Note	
PA076	MWG BRINE WELL D=100 MM H=780 MM (CAB. 35″SURF/LINE)	45	215		
PA001	MWG CAP FOR BRINE WELL D=100 MM	45	215		

Certificates	Manufacturer	Sectors
	MWG	Domestic

Cabinets for Softeners Slim Line Series

Ref	Description	Fam.	Subfam.	Note	
C0724LWSAS	MWG CAB. SLIM LINE WHITE BODY - LIGHT BLUE COVER 7X24*	45	210	(**)	
C0724LWSWS	MWG CAB. SLIM LINE WHITE BODY - WHITE COVER 7X24*	45	210	(**)	
C0724LWSDS	MWG CAB. SLIM LINE WHITE BODY - BLACK COVER 7X24*	45	210	(**)	
C0824LWSAS	MWG CAB. SLIM LINE WHITE BODY - LIGHT BLUE COVER 8X24*	45	210		
C0824LWSWS	MWG CAB. SLIM LINE WHITE BODY - WHITE COVER 8X24*	45	210	(**)	
C0824LWSDS	MWG CAB. SLIM LINE WHITE BODY - BLACK COVER 8X24*	45	210	(**)	
C0924LWSAS	MWG CAB. SLIM LINE WHITE BODY - LIGHT BLUE COVER 9X24*	45	210		
C0924LWSWS	MWG CAB. SLIM LINE WHITE BODY - WHITE COVER 9X24*	45	210	(**)	
C0924LWSDS	MWG CAB. SLIM LINE WHITE BODY - BLACK COVER 9X24*	45	210		
C1024LWSAS	MWG CAB. SLIM LINE WHITE BODY - LIGHT BLUE COVER 10X24*	45	210		
C1024LWSWS	MWG CAB. SLIM LINE WHITE BODY - WHITE COVER 10X24*	45	210		
C1024LWSDS	MWG CAB. SLIM LINE WHITE BODY - BLACK COVER 10X24*	45	210	(**)	

Ref	Widht (mm)	Lenght (mm)	Heigth (mm)
C0724LWSAS	320	500	620
C0724LWSWS	320	500	620
C0724LWSDS	320	500	620
C0824LWSAS	320	500	620
C0824LWSWS	320	500	620
C0824LWSDS	320	500	620
C0924LWSAS	320	500	620
C0924LWSWS	320	500	620
C0924LWSDS	320	500	620
C1024LWSAS	320	500	620
C1024LWSWS	320	500	620
C1024LWSDS	320	500	620

Box: WxLxH	Box: Q.ty	Box: Weight	Pallet: WxLxH	Pallet: Q.ty	Pallet: Weight

Accessories

Ref	Description	Fam.	Subfam.	Note	
PA074	MWG BRINE WELL D=100 MM H=520 MM (CAB. 24″ + BRINE TANK 100L)	45	215		
PA001	MWG CAP FOR BRINE WELL D=100 MM	45	215		

Certificates	Manufacturer	Sectors
	MWG	Domestic

Cabinets for Softeners Slim Surf Series

- Tanks and covers made in European Union (Italy);
- Cabinets for residential softeners, complete with salt lid and cover of exclusive design;
- With MWG tank;

- Materials: tank in HDPE, cover in polystyrene;
- Standard colours: white tank and blue, white or black cover;
- On demand and for quantities we can realize customized colours;
- EU design patent no. 003156272.

(**) minimum order quantity = 250 pcs.

Ref	Description	Fam.	Subfam.	Note	
C0717SWSAS	MWG CAB. SLIM SURF WHITE BODY - LIGHT BLUE COVER 7X17*	45	210		
C0717SWSWS	MWG CAB. SLIM SURF WHITE BODY - WHITE COVER 7X17*	45	210	(**)	
C0717SWSDS	MWG CAB. SLIM SURF WHITE BODY - BLACK COVER 7X17*	45	210	(**)	
C0817SWSAS	MWG CAB. SLIM SURF WHITE BODY - LIGHT BLUE COVER 8X17*	45	210		
C0817SWSWS	MWG CAB. SLIM SURF WHITE BODY - WHITE COVER 8X17*	45	210	(**)	
C0817SWSDS	MWG CAB. SLIM SURF WHITE BODY - BLACK COVER 8X17*	45	210		
C0917SWSAS	MWG CAB. SLIM SURF WHITE BODY - LIGHT BLUE COVER 9X17*	45	210		
C0917SWSWS	MWG CAB. SLIM SURF WHITE BODY - WHITE COVER 9X17*	45	210	(**)	
C0917SWSDS	MWG CAB. SLIM SURF WHITE BODY - BLACK COVER 9X17*	45	210	(**)	
C1017SWSAS	MWG CAB. SLIM SURF WHITE BODY - LIGHT BLUE COVER 10X17*	45	210		
C1017SWSWS	MWG CAB. SLIM SURF WHITE BODY - WHITE COVER 10X17*	45	210	(**)	
C1017SWSDS	MWG CAB. SLIM SURF WHITE BODY - BLACK COVER 10X17*	45	210		

Ref	Width (mm)	Length (mm)	Height (mm)
C0717SWSAS	320	500	440
C0717SWSWS	320	500	440
C0717SWSDS	320	500	440
C0817SWSAS	320	500	440
C0817SWSWS	320	500	440
C0817SWSDS	320	500	440
C0917SWSAS	320	500	440
C0917SWSWS	320	500	440
C0917SWSDS	320	500	440
C1017SWSAS	320	500	440
C1017SWSWS	320	500	440
C1017SWSDS	320	500	440

Box: WxLxH	Box: Q.ty	Box: Weight	Pallet: WxLxH	Pallet: Q.ty	Pallet: Weight

Accessories

Ref	Description	Fam.	Subfam.	Note	
PA002	MWG BRINE WELL D=100 MM H=340 MM (CAB. 17″)	45	215		
PA001	MWG CAP FOR BRINE WELL D=100 MM	45	215		

Certificates	Manufacturer	Sectors
	MWG	Domestic

Cabinets for Softeners Slim Surf Series

Ref	Description	Fam.	Subfam.	Note	
C0724SWSAS	MWG CAB. SLIM SURF WHITE BODY - LIGHT BLUE COVER 7X24*	45	210		
C0724SWSWS	MWG CAB. SLIM SURF WHITE BODY - WHITE COVER 7X24*	45	210	(**)	
C0724SWSDS	MWG CAB. SLIM SURF WHITE BODY - BLACK COVER 7X24*	45	210	(**)	
C0824SWSAS	MWG CAB. SLIM SURF WHITE BODY - LIGHT BLUE COVER 8X24*	45	210		
C0824SWSWS	MWG CAB. SLIM SURF WHITE BODY - WHITE COVER 8X24*	45	210		
C0824SWSDS	MWG CAB. SLIM SURF WHITE BODY - BLACK COVER 8X24*	45	210		
C0924SWSAS	MWG CAB. SLIM SURF WHITE BODY - LIGHT BLUE COVER 9X24*	45	210		
C0924SWSWS	MWG CAB. SLIM SURF WHITE BODY - WHITE COVER 9X24*	45	210	(**)	
C0924SWSDS	MWG CAB. SLIM SURF WHITE BODY - BLACK COVER 9X24*	45	210		
C1024SWSAS	MWG CAB. SLIM SURF WHITE BODY - LIGHT BLUE COVER 10X24*	45	210		
C1024SWSWS	MWG CAB. SLIM SURF WHITE BODY - WHITE COVER 10X24*	45	210		
C1024SWSDS	MWG CAB. SLIM SURF WHITE BODY - BLACK COVER 10X24*	45	210		

Ref	Widht (mm)	Lenght (mm)	Heigth (mm)
C0724SWSAS	320	500	620
C0724SWSWS	320	500	620
C0724SWSDS	320	500	620
C0824SWSAS	320	500	620
C0824SWSWS	320	500	620
C0824SWSDS	320	500	620
C0924SWSAS	320	500	620
C0924SWSWS	320	500	620
C0924SWSDS	320	500	620
C1024SWSAS	320	500	620
C1024SWSWS	320	500	620
C1024SWSDS	320	500	620

Box: WxLxH	Box: Q.ty	Box: Weight	Pallet: WxLxH	Pallet: Q.ty	Pallet: Weight

Accessories

Ref	Description	Fam.	Subfam.	Note	
PA074	MWG BRINE WELL D=100 MM H=520 MM (CAB. 24″ + BRINE TANK 100L)	45	215		
PA001	MWG CAP FOR BRINE WELL D=100 MM	45	215		

Certificates	Manufacturer	Sectors
	MWG	Domestic

Cabinets for Softeners Slim Surf Series

Ref	Description	Fam.	Subfam.	Note	
C0735SWSAS	MWG CAB. SLIM SURF WHITE BODY - LIGHT BLUE COVER 7X35*	45	210		
C0735SWSWS	MWG CAB. SLIM SURF WHITE BODY - WHITE COVER 7X35*	45	210	(**)	
C0735SWSDS	MWG CAB. SLIM SURF WHITE BODY - BLACK COVER 7X35*	45	210		
C0835SWSAS	MWG CAB. SLIM SURF WHITE BODY - LIGHT BLUE COVER 8X35*	45	210		
C0835SWSWS	MWG CAB. SLIM SURF WHITE BODY - WHITE COVER 8X35*	45	210	(**)	
C0835SWSDS	MWG CAB. SLIM SURF WHITE BODY - BLACK COVER 8X35*	45	210		
C0935SWSAS	MWG CAB. SLIM SURF WHITE BODY - LIGHT BLUE COVER 9X35*	45	210		
C0935SWSWS	MWG CAB. SLIM SURF WHITE BODY - WHITE COVER 9X35*	45	210	(**)	
C0935SWSDS	MWG CAB. SLIM SURF WHITE BODY - BLACK COVER 9X35*	45	210		
C1035SWSAS	MWG CAB. SLIM SURF WHITE BODY - LIGHT BLUE COVER 10X35*	45	210		
C1035SWSWS	MWG CAB. SLIM SURF WHITE BODY - WHITE COVER 10X35*	45	210		
C1035SWSDS	MWG CAB. SLIM SURF WHITE BODY - BLACK COVER 10X35*	45	210		

Ref	Width (mm)	Length (mm)	Height (mm)
C0735SWSAS	320	500	900
C0735SWSWS	320	500	900
C0735SWSDS	320	500	900
C0835SWSAS	320	500	900
C0835SWSWS	320	500	900
C0835SWSDS	320	500	900
C0935SWSAS	320	500	900
C0935SWSWS	320	500	900
C0935SWSDS	320	500	900
C1035SWSAS	320	500	900
C1035SWSWS	320	500	900
C1035SWSDS	320	500	900

Box: WxLxH	Box: Q.ty	Box: Weight	Pallet: WxLxH	Pallet: Q.ty	Pallet: Weight

Accessories

Ref	Description	Fam.	Subfam.	Note	
PA076	MWG BRINE WELL D=100 MM H=780 MM (CAB. 35″SURF/LINE)	45	215		
PA001	MWG CAP FOR BRINE WELL D=100 MM	45	215		

Certificates	Manufacturer	Sectors
	MWG	Domestic

Cabinets for Softeners Top Line Series

- Tanks and covers made in European Union (Italy);
- Cabinets for residential softeners, complete with salt lid and cover of exclusive design;
- With MWG tank;
- Materials: tank in HDPE, cover in polystyrene;
- Standard colours: white tank and blue, white or black cover;
- On demand and for quantities we can realize customized colours;
- EU design patent no. 003156272.

(**) minimum order quantity = 250 pcs.

Ref	Description	Fam.	Subfam.	Note	
C0717LWTAS	MWG CAB. TOP LINE WHITE BODY - LIGHT BLUE COVER 7X17*	45	210	(**)	
C0717LWTWS	MWG CAB. TOP LINE WHITE BODY - WHITE COVER 7X17*	45	210	(**)	
C0717LWTDS	MWG CAB. TOP LINE WHITE BODY - BLACK COVER 7X17*	45	210	(**)	
C0817LWTAS	MWG CAB. TOP LINE WHITE BODY - LIGHT BLUE COVER 8X17*	45	210	(**)	
C0817LWTWS	MWG CAB. TOP LINE WHITE BODY - WHITE COVER 8X17*	45	210	(**)	
C0817LWTDS	MWG CAB. TOP LINE WHITE BODY - BLACK COVER 8X17*	45	210	(**)	
C0917LWTAS	MWG CAB. TOP LINE WHITE BODY - LIGHT BLUE COVER 9X17*	45	210	(**)	
C0917LWTWS	MWG CAB. TOP LINE WHITE BODY - WHITE COVER 9X17*	45	210	(**)	
C0917LWTDS	MWG CAB. TOP LINE WHITE BODY - BLACK COVER 9X17*	45	210	(**)	
C1017LWTAS	MWG CAB. TOP LINE WHITE BODY - LIGHT BLUE COVER 10X17*	45	210	(**)	
C1017LWTWS	MWG CAB. TOP LINE WHITE BODY - WHITE COVER 10X17*	45	210	(**)	
C1017LWTDS	MWG CAB. TOP LINE WHITE BODY - BLACK COVER 10X17*	45	210	(**)	

Ref	Width (mm)	Length (mm)	Height (mm)
C0717LWTAS	320	500	670
C0717LWTWS	320	500	670
C0717LWTDS	320	500	670
C0817LWTAS	320	500	670
C0817LWTWS	320	500	670
C0817LWTDS	320	500	670
C0917LWTAS	320	500	670
C0917LWTWS	320	500	670
C0917LWTDS	320	500	670
C1017LWTAS	320	500	670
C1017LWTWS	320	500	670
C1017LWTDS	320	500	670

Box: WxLxH	Box: Q.ty	Box: Weight	Pallet: WxLxH	Pallet: Q.ty	Pallet: Weight

Accessories

Ref	Description	Fam.	Subfam.	Note	
PA002	MWG BRINE WELL D=100 MM H=340 MM (CAB. 17″)	45	215		
PA001	MWG CAP FOR BRINE WELL D=100 MM	45	215		

Certificates	Manufacturer	Sectors
	MWG	Domestic

Cabinets for Softeners Top Line Series

Ref	Description	Fam.	Subfam.	Note	
C0724LWTAS	MWG CAB. TOP LINE WHITE BODY - LIGHT BLUE COVER 7X24*	45	210	(**)	
C0724LWTWS	MWG CAB. TOP LINE WHITE BODY - WHITE COVER 7X24*	45	210	(**)	
C0724LWTDS	MWG CAB. TOP LINE WHITE BODY - BLACK COVER 7X24*	45	210	(**)	
C0824LWTAS	MWG CAB. TOP LINE WHITE BODY - LIGHT BLUE COVER 8X24*	45	210	(**)	
C0824LWTWS	MWG CAB. TOP LINE WHITE BODY - WHITE COVER 8X24*	45	210	(**)	
C0824LWTDS	MWG CAB. TOP LINE WHITE BODY - BLACK COVER 8X24*	45	210	(**)	
C0924LWTAS	MWG CAB. TOP LINE WHITE BODY - LIGHT BLUE COVER 9X24*	45	210	(**)	
C0924LWTWS	MWG CAB. TOP LINE WHITE BODY - WHITE COVER 9X24*	45	210	(**)	
C0924LWTDS	MWG CAB. TOP LINE WHITE BODY - BLACK COVER 9X24*	45	210	(**)	
C1024LWTAS	MWG CAB. TOP LINE WHITE BODY - LIGHT BLUE COVER 10X24*	45	210		
C1024LWTWS	MWG CAB. TOP LINE WHITE BODY - WHITE COVER 10X24*	45	210	(**)	
C1024LWTDS	MWG CAB. TOP LINE WHITE BODY - BLACK COVER 10X24*	45	210	(**)	

Ref	Width (mm)	Length (mm)	Height (mm)
C0724LWTAS	320	500	840
C0724LWTWS	320	500	840
C0724LWTDS	320	500	840
C0824LWTAS	320	500	840
C0824LWTWS	320	500	840
C0824LWTDS	320	500	840
C0924LWTAS	320	500	840
C0924LWTWS	320	500	840
C0924LWTDS	320	500	840
C1024LWTAS	320	500	840
C1024LWTWS	320	500	840
C1024LWTDS	320	500	840

Box: WxLxH	Box: Q.ty	Box: Weight	Pallet: WxLxH	Pallet: Q.ty	Pallet: Weight

Accessories

Ref	Description	Fam.	Subfam.	Note	
PA074	MWG BRINE WELL D=100 MM H=520 MM (CAB. 24″ + BRINE TANK 100L)	45	215		
PA001	MWG CAP FOR BRINE WELL D=100 MM	45	215		

Certificates	Manufacturer	Sectors
	MWG	Domestic

Cabinets for Softeners Top Line Series

Ref	Description	Fam.	Subfam.	Note	
C0735LWTAS	MWG CAB. TOP LINE WHITE BODY - LIGHT BLUE COVER 7X35*	45	210		
C0735LWTWS	MWG CAB. TOP LINE WHITE BODY - WHITE COVER 7X35*	45	210	(**)	
C0735LWTDS	MWG CAB. TOP LINE WHITE BODY - BLACK COVER 7X35*	45	210	(**)	
C0835LWTAS	MWG CAB. TOP LINE WHITE BODY - LIGHT BLUE COVER 8X35*	45	210	(**)	
C0835LWTWS	MWG CAB. TOP LINE WHITE BODY - WHITE COVER 8X35*	45	210		
C0835LWTDS	MWG CAB. TOP LINE WHITE BODY - BLACK COVER 8X35*	45	210	(**)	
C0935LWTAS	MWG CAB. TOP LINE WHITE BODY - LIGHT BLUE COVER 9X35*	45	210	(**)	
C0935LWTWS	MWG CAB. TOP LINE WHITE BODY - WHITE COVER 9X35*	45	210	(**)	
C0935LWTDS	MWG CAB. TOP LINE WHITE BODY - BLACK COVER 9X35*	45	210	(**)	
C1035LWTAS	MWG CAB. TOP LINE WHITE BODY - LIGHT BLUE COVER 10X35*	45	210		
C1035LWTWS	MWG CAB. TOP LINE WHITE BODY - WHITE COVER 10X35*	45	210	(**)	
C1035LWTDS	MWG CAB. TOP LINE WHITE BODY - BLACK COVER 10X35*	45	210	(**)	

Ref	Width (mm)	Length (mm)	Height (mm)
C0735LWTAS	320	500	1140
C0735LWTWS	320	500	1140
C0735LWTDS	320	500	1140
C0835LWTAS	320	500	1140
C0835LWTWS	320	500	1140
C0835LWTDS	320	500	1140
C0935LWTAS	320	500	1140
C0935LWTWS	320	500	1140
C0935LWTDS	320	500	1140
C1035LWTAS	320	500	1140
C1035LWTWS	320	500	1140
C1035LWTDS	320	500	1140

Box: WxLxH	Box: Q.ty	Box: Weight	Pallet: WxLxH	Pallet: Q.ty	Pallet: Weight

Accessories

Ref	Description	Fam.	Subfam.	Note	
PA076	MWG BRINE WELL D=100 MM H=780 MM (CAB. 35″SURF/LINE)	45	215		
PA001	MWG CAP FOR BRINE WELL D=100 MM	45	215		

Certificates	Manufacturer	Sectors
	MWG	Domestic

Cabinets for Softeners Top Surf Series

- Tanks and covers made in European Union (Italy);
- Cabinets for residential softeners, complete with salt lid and cover of exclusive design;
- With MWG tank;
- Materials: tank in HDPE, cover in polystyrene;
- Standard colours: white tank and blue, white or black cover;
- On demand and for quantities we can realize customized colours;
- EU design patent no. 003156272.

(**) minimum order quantity = 250 pcs.

Ref	Description	Fam.	Subfam.	Note	
C0717SWTAS	MWG CAB. TOP SURF WHITE BODY - LIGHT BLUE COVER 7X17*	45	210	(**)	
C0717SWTWS	MWG CAB. TOP SURF WHITE BODY - WHITE COVER 7X17*	45	210	(**)	
C0717SWTDS	MWG CAB. TOP SURF WHITE BODY - BLACK COVER 7X17*	45	210	(**)	
C0817SWTAS	MWG CAB. TOP SURF WHITE BODY - LIGHT BLUE COVER 8X17*	45	210	(**)	
C0817SWTWS	MWG CAB. TOP SURF WHITE BODY - WHITE COVER 8X17*	45	210	(**)	
C0817SWTDS	MWG CAB. TOP SURF WHITE BODY - BLACK COVER 8X17*	45	210	(**)	
C0917SWTAS	MWG CAB. TOP SURF WHITE BODY - LIGHT BLUE COVER 9X17*	45	210	(**)	
C0917SWTWS	MWG CAB. TOP SURF WHITE BODY - WHITE COVER 9X17*	45	210	(**)	
C0917SWTDS	MWG CAB. TOP SURF WHITE BODY - BLACK COVER 9X17*	45	210	(**)	
C1017SWTAS	MWG CAB. TOP SURF WHITE BODY - LIGHT BLUE COVER 10X17*	45	210		
C1017SWTWS	MWG CAB. TOP SURF WHITE BODY - WHITE COVER 10X17*	45	210	(**)	
C1017SWTDS	MWG CAB. TOP SURF WHITE BODY - BLACK COVER 10X17*	45	210	(**)	

Ref	Width (mm)	Length (mm)	Height (mm)
C0717SWTAS	320	500	670
C0717SWTWS	320	500	670
C0717SWTDS	320	500	670
C0817SWTAS	320	500	670
C0817SWTWS	320	500	670
C0817SWTDS	320	500	670
C0917SWTAS	320	500	670
C0917SWTWS	320	500	670
C0917SWTDS	320	500	670
C1017SWTAS	320	500	670
C1017SWTWS	320	500	670
C1017SWTDS	320	500	670

Box: WxLxH	Box: Q.ty	Box: Weight	Pallet: WxLxH	Pallet: Q.ty	Pallet: Weight

Accessories

Ref	Description	Fam.	Subfam.	Note	
PA002	MWG BRINE WELL D=100 MM H=340 MM (CAB. 17″)	45	215		
PA001	MWG CAP FOR BRINE WELL D=100 MM	45	215		

Certificates	Manufacturer	Sectors
	MWG	Domestic

Cabinets for Softeners Top Surf Series

Ref	Description	Fam.	Subfam.	Note	
C0724SWTAS	MWG CAB. TOP SURF WHITE BODY - LIGHT BLUE COVER 7X24*	45	210	(**)	
C0724SWTWS	MWG CAB. TOP SURF WHITE BODY - WHITE COVER 7X24*	45	210	(**)	
C0724SWTDS	MWG CAB. TOP SURF WHITE BODY - BLACK COVER 7X24*	45	210	(**)	
C0824SWTAS	MWG CAB. TOP SURF WHITE BODY - LIGHT BLUE COVER 8X24*	45	210	(**)	
C0824SWTWS	MWG CAB. TOP SURF WHITE BODY - WHITE COVER 8X24*	45	210	(**)	
C0824SWTDS	MWG CAB. TOP SURF WHITE BODY - BLACK COVER 8X24*	45	210	(**)	
C0924SWTAS	MWG CAB. TOP SURF WHITE BODY - LIGHT BLUE COVER 9X24*	45	210		
C0924SWTWS	MWG CAB. TOP SURF WHITE BODY - WHITE COVER 9X24*	45	210	(**)	
C0924SWTDS	MWG CAB. TOP SURF WHITE BODY - BLACK COVER 9X24*	45	210	(**)	
C1024SWTAS	MWG CAB. TOP SURF WHITE BODY - LIGHT BLUE COVER 10X24*	45	210		
C1024SWTWS	MWG CAB. TOP SURF WHITE BODY - WHITE COVER 10X24*	45	210	(**)	
C1024SWTDS	MWG CAB. TOP SURF WHITE BODY - BLACK COVER 10X24*	45	210	(**)	

Ref	Width (mm)	Length (mm)	Height (mm)
C0724SWTAS	320	500	840
C0724SWTWS	320	500	840
C0724SWTDS	320	500	840
C0824SWTAS	320	500	840
C0824SWTWS	320	500	840
C0824SWTDS	320	500	840
C0924SWTAS	320	500	840
C0924SWTWS	320	500	840
C0924SWTDS	320	500	840
C1024SWTAS	320	500	840
C1024SWTWS	320	500	840
C1024SWTDS	320	500	840

Box: WxLxH	Box: Q.ty	Box: Weight	Pallet: WxLxH	Pallet: Q.ty	Pallet: Weight

Accessories

Ref	Description	Fam.	Subfam.	Note	
PA074	MWG BRINE WELL D=100 MM H=520 MM (CAB. 24″ + BRINE TANK 100L)	45	215		
PA001	MWG CAP FOR BRINE WELL D=100 MM	45	215		

Certificates	Manufacturer	Sectors
	MWG	Domestic

Cabinets for Softeners Top Surf Series

Ref	Description	Fam.	Subfam.	Note	
C0735SWTAS	MWG CAB. TOP SURF WHITE BODY - LIGHT BLUE COVER 7X35*	45	210	(**)	
C0735SWTWS	MWG CAB. TOP SURF WHITE BODY - WHITE COVER 7X35*	45	210	(**)	
C0735SWTDS	MWG CAB. TOP SURF WHITE BODY - BLACK COVER 7X35*	45	210	(**)	
C0835SWTAS	MWG CAB. TOP SURF WHITE BODY - LIGHT BLUE COVER 8X35*	45	210	(**)	
C0835SWTWS	MWG CAB. TOP SURF WHITE BODY - WHITE COVER 8X35*	45	210	(**)	
C0835SWTDS	MWG CAB. TOP SURF WHITE BODY - BLACK COVER 8X35*	45	210	(**)	
C0935SWTAS	MWG CAB. TOP SURF WHITE BODY - LIGHT BLUE COVER 9X35*	45	210	(**)	
C0935SWTWS	MWG CAB. TOP SURF WHITE BODY - WHITE COVER 9X35*	45	210	(**)	
C0935SWTDS	MWG CAB. TOP SURF WHITE BODY - BLACK COVER 9X35*	45	210	(**)	
C1035SWTAS	MWG CAB. TOP SURF WHITE BODY - LIGHT BLUE COVER 10X35*	45	210		
C1035SWTWS	MWG CAB. TOP SURF WHITE BODY - WHITE COVER 10X35*	45	210	(**)	
C1035SWTDS	MWG CAB. TOP SURF WHITE BODY - BLACK COVER 10X35*	45	210	(**)	

Ref	Width (mm)	Length (mm)	Height (mm)
C0735SWTAS	320	500	1140
C0735SWTWS	320	500	1140
C0735SWTDS	320	500	1140
C0835SWTAS	320	500	1140
C0835SWTWS	320	500	1140
C0835SWTDS	320	500	1140
C0935SWTAS	320	500	1140
C0935SWTWS	320	500	1140
C0935SWTDS	320	500	1140
C1035SWTAS	320	500	1140
C1035SWTWS	320	500	1140
C1035SWTDS	320	500	1140

Box: WxLxH	Box: Q.ty	Box: Weight	Pallet: WxLxH	Pallet: Q.ty	Pallet: Weight

Accessories

Ref	Description	Fam.	Subfam.	Note	
PA076	MWG BRINE WELL D=100 MM H=780 MM (CAB. 35″SURF/LINE)	45	215		
PA001	MWG CAP FOR BRINE WELL D=100 MM	45	215		

Certificates	Manufacturer	Sectors
	MWG	Domestic

Cabinets for Softeners Top Line Clear Series

- Tanks and covers made in European Union (Italy);
- Cabinets for residential softeners, complete with salt lid and cover of exclusive design with transparent insert;
- With MWG tank;
- Materials: tank in HDPE, cover in polystyrene;
- Standard colours: white tank and blue, white or black cover;
- On demand and for quantities we can realize customized colours;
- EU design patent no. 003156272.

(**) minimum order quantity = 250 pcs.

Ref	Description	Fam.	Subfam.	Note	
C0717LWTPS	MWG CAB. TOP LINE CLEAR WHITE BODY - LIGHT BLUE COVER 7X17*	45	210	(**)	
C0717LWTZS	MWG CAB. TOP LINE CLEAR WHITE BODY - WHITE COVER 7X17*	45	210		
C0717LWTTS	MWG CAB. TOP LINE CLEAR WHITE BODY - BLACK COVER 7X17*	45	210	(**)	
C0817LWTPS	MWG CAB. TOP LINE CLEAR WHITE BODY - LIGHT BLUE COVER 8X17*	45	210		
C0817LWTZS	MWG CAB. TOP LINE CLEAR WHITE BODY - WHITE COVER 8X17*	45	210	(**)	
C0817LWTTS	MWG CAB. TOP LINE CLEAR WHITE BODY - BLACK COVER 8X17*	45	210	(**)	
C0917LWTPS	MWG CAB. TOP LINE CLEAR WHITE BODY - LIGHT BLUE COVER 9X17*	45	210	(**)	
C0917LWTZS	MWG CAB. TOP LINE CLEAR WHITE BODY - WHITE COVER 9X17*	45	210	(**)	
C0917LWTTS	MWG CAB. TOP LINE CLEAR WHITE BODY - BLACK COVER 9X17*	45	210	(**)	
C1017LWTPS	MWG CAB. TOP LINE CLEAR WHITE BODY - LIGHT BLUE COVER 10X17*	45	210		
C1017LWTZS	MWG CAB. TOP LINE CLEAR WHITE BODY - WHITE COVER 10X17*	45	210	(**)	
C1017LWTTS	MWG CAB. TOP LINE CLEAR WHITE BODY - BLACK COVER 10X17*	45	210	(**)	

Ref	Width (mm)	Length (mm)	Height (mm)
C0717LWTPS	320	500	670
C0717LWTZS	320	500	670
C0717LWTTS	320	500	670
C0817LWTPS	320	500	670
C0817LWTZS	320	500	670
C0817LWTTS	320	500	670
C0917LWTPS	320	500	670
C0917LWTZS	320	500	670
C0917LWTTS	320	500	670
C1017LWTPS	320	500	670
C1017LWTZS	320	500	670
C1017LWTTS	320	500	670

Box: WxLxH	Box: Q.ty	Box: Weight	Pallet: WxLxH	Pallet: Q.ty	Pallet: Weight

Accessories

Ref	Description	Fam.	Subfam.	Note	
PA002	MWG BRINE WELL D=100 MM H=340 MM (CAB. 17″)	45	215		
PA001	MWG CAP FOR BRINE WELL D=100 MM	45	215		

Certificates	Manufacturer	Sectors
	MWG	Domestic

Cabinets for Softeners Top Line Clear Series

Ref	Description	Fam.	Subfam.	Note	
C0724LWTPS	MWG CAB. TOP LINE CLEAR WHITE BODY - LIGHT BLUE COVER 7X24*	45	210	(**)	
C0724LWTZS	MWG CAB. TOP LINE CLEAR WHITE BODY - WHITE COVER 7X24*	45	210	(**)	
C0724LWTTS	MWG CAB. TOP LINE CLEAR WHITE BODY - BLACK COVER 7X24*	45	210	(**)	
C0824LWTPS	MWG CAB. TOP LINE CLEAR WHITE BODY - LIGHT BLUE COVER 8X24*	45	210	(**)	
C0824LWTZS	MWG CAB. TOP LINE CLEAR WHITE BODY - WHITE COVER 8X24*	45	210	(**)	
C0824LWTTS	MWG CAB. TOP LINE CLEAR WHITE BODY - BLACK COVER 8X24*	45	210		
C0924LWTPS	MWG CAB. TOP LINE CLEAR WHITE BODY - LIGHT BLUE COVER 9X24*	45	210		
C0924LWTZS	MWG CAB. TOP LINE CLEAR WHITE BODY - WHITE COVER 9X24*	45	210	(**)	
C0924LWTTS	MWG CAB. TOP LINE CLEAR WHITE BODY - BLACK COVER 9X24*	45	210	(**)	
C1024LWTPS	MWG CAB. TOP LINE CLEAR WHITE BODY - LIGHT BLUE COVER 10X24*	45	210		
C1024LWTZS	MWG CAB. TOP LINE CLEAR WHITE BODY - WHITE COVER 10X24*	45	210	(**)	
C1024LWTTS	MWG CAB. TOP LINE CLEAR WHITE BODY - BLACK COVER 10X24*	45	210		

Ref	Width (mm)	Length (mm)	Height (mm)
C0724LWTPS	320	500	840
C0724LWTZS	320	500	840
C0724LWTTS	320	500	840
C0824LWTPS	320	500	840
C0824LWTZS	320	500	840
C0824LWTTS	320	500	840
C0924LWTPS	320	500	840
C0924LWTZS	320	500	840
C0924LWTTS	320	500	840
C1024LWTPS	320	500	840
C1024LWTZS	320	500	840
C1024LWTTS	320	500	840

Box: WxLxH	Box: Q.ty	Box: Weight	Pallet: WxLxH	Pallet: Q.ty	Pallet: Weight

Accessories

Ref	Description	Fam.	Subfam.	Note	
PA074	MWG BRINE WELL D=100 MM H=520 MM (CAB. 24″ + BRINE TANK 100L)	45	215		
PA001	MWG CAP FOR BRINE WELL D=100 MM	45	215		

Certificates	Manufacturer	Sectors
	MWG	Domestic

Cabinets for Softeners Top Line Clear Series

Ref	Description	Fam.	Subfam.	Note	
C0735LWTPS	MWG CAB. TOP LINE CLEAR WHITE BODY - LIGHT BLUE COVER 7X35*	45	210	(**)	
C0735LWTZS	MWG CAB. TOP LINE CLEAR WHITE BODY - WHITE COVER 7X35*	45	210	(**)	
C0735LWTTS	MWG CAB. TOP LINE CLEAR WHITE BODY - BLACK COVER 7X35*	45	210		
C0835LWTPS	MWG CAB. TOP LINE CLEAR WHITE BODY - LIGHT BLUE COVER 8X35*	45	210		
C0835LWTZS	MWG CAB. TOP LINE CLEAR WHITE BODY - WHITE COVER 8X35*	45	210	(**)	
C0835LWTTS	MWG CAB. TOP LINE WHITE BODY - BLACK COVER 8X35*	45	210		
C0935LWTPS	MWG CAB. TOP LINE CLEAR WHITE BODY - LIGHT BLUE COVER 9X35*	45	210	(**)	
C0935LWTZS	MWG CAB. TOP LINE CLEAR WHITE BODY - WHITE COVER 9X35*	45	210	(**)	
C0935LWTTS	MWG CAB. TOP LINE CLEAR WHITE BODY - BLACK COVER 9X35*	45	210	(**)	
C1035LWTPS	MWG CAB. TOP LINE CLEAR WHITE BODY - LIGHT BLUE COVER 10X35*	45	210		
C1035LWTZS	MWG CAB. TOP LINE CLEAR WHITE BODY - WHITE COVER 10X35*	45	210	(**)	
C1035LWTTS	MWG CAB. TOP LINE CLEAR WHITE BODY - BLACK COVER 10X35*	45	210		

Ref	Width (mm)	Length (mm)	Height (mm)
C0735LWTPS	320	500	1140
C0735LWTZS	320	500	1140
C0735LWTTS	320	500	1140
C0835LWTPS	320	500	1140
C0835LWTZS	320	500	1140
C0835LWTTS	320	500	1140
C0935LWTPS	320	500	1140
C0935LWTZS	320	500	1140
C0935LWTTS	320	500	1140
C1035LWTPS	320	500	1140
C1035LWTZS	320	500	1140
C1035LWTTS	320	500	1140

Box: WxLxH	Box: Q.ty	Box: Weight	Pallet: WxLxH	Pallet: Q.ty	Pallet: Weight

Accessories

Ref	Description	Fam.	Subfam.	Note	
PA076	MWG BRINE WELL D=100 MM H=780 MM (CAB. 35″SURF/LINE)	45	215		
PA001	MWG CAP FOR BRINE WELL D=100 MM	45	215		

Certificates	Manufacturer	Sectors
	MWG	Domestic

Cabinets for Softeners Top Surf Clear Series

- Tanks and covers made in European Union (Italy);
- Cabinets for residential softeners, complete with salt lid and cover of exclusive design with transparent insert;
- With MWG tank;
- Materials: tank in HDPE, cover in polystyrene;
- Standard colours: white tank and blue, white or black cover;
- On demand and for quantities we can realize customized colours;
- EU design patent no. 003156272.

(**) minimum order quantity = 250 pcs.

Ref	Description	Fam.	Subfam.	Note	
C0717SWTPS	MWG CAB. TOP SURF CLEAR WHITE BODY - LIGHT BLUE COVER 7X17*	45	210	(**)	
C0717SWTZS	MWG CAB. TOP SURF CLEAR WHITE BODY - WHITE COVER 7X17*	45	210	(**)	
C0717SWTTS	MWG CAB. TOP SURF CLEAR WHITE BODY - BLACK COVER 7X17*	45	210	(**)	
C0817SWTPS	MWG CAB. TOP SURF CLEAR WHITE BODY - LIGHT BLUE COVER 8X17*	45	210	(**)	
C0817SWTZS	MWG CAB. TOP SURF CLEAR WHITE BODY - WHITE COVER 8X17*	45	210	(**)	
C0817SWTTS	MWG CAB. TOP SURF CLEAR WHITE BODY - BLACK COVER 8X17*	45	210	(**)	
C0917SWTPS	MWG CAB. TOP SURF CLEAR WHITE BODY - LIGHT BLUE COVER 9X17*	45	210	(**)	
C0917SWTZS	MWG CAB. TOP SURF CLEAR WHITE BODY - WHITE COVER 9X17*	45	210	(**)	
C0917SWTTS	MWG CAB. TOP SURF CLEAR WHITE BODY - BLACK COVER 9X17*	45	210	(**)	
C1017SWTPS	MWG CAB. TOP SURF CLEAR WHITE BODY - LIGHT BLUE COVER 10X17*	45	210		
C1017SWTZS	MWG CAB. TOP SURF CLEAR WHITE BODY - WHITE COVER 10X17*	45	210	(**)	
C1017SWTTS	MWG CAB. TOP SURF CLEAR WHITE BODY - BLACK COVER 10X17*	45	210	(**)	

Ref	Width (mm)	Length(mm)	Height (mm)
C0717SWTPS	320	500	670
C0717SWTZS	320	500	670
C0717SWTTS	320	500	670
C0817SWTPS	320	500	670
C0817SWTZS	320	500	670
C0817SWTTS	320	500	670
C0917SWTPS	320	500	670
C0917SWTZS	320	500	670
C0917SWTTS	320	500	670
C1017SWTPS	320	500	670
C1017SWTZS	320	500	670
C1017SWTTS	320	500	670

Box: WxLxH	Box: Q.ty	Box: Weight	Pallet: WxLxH	Pallet: Q.ty	Pallet: Weight

Accessories

Ref	Description	Fam.	Subfam.	Note	
PA002	MWG BRINE WELL D=100 MM H=340 MM (CAB. 17″)	45	215		
PA001	MWG CAP FOR BRINE WELL D=100 MM	45	215		

Certificates	Manufacturer	Sectors
	MWG	Domestic

Cabinets for Softeners Top Surf Clear Series

Ref	Description	Fam.	Subfam.	Note	
C0724SWTPS	MWG CAB. TOP SURF CLEAR WHITE BODY - LIGHT BLUE COVER 7X24*	45	210	(**)	
C0724SWTZS	MWG CAB. TOP SURF CLEAR WHITE BODY - WHITE COVER 7X24*	45	210	(**)	
C0724SWTTS	MWG CAB. TOP SURF CLEAR WHITE BODY - BLACK COVER 7X24*	45	210	(**)	
C0824SWTPS	MWG CAB. TOP SURF CLEAR WHITE BODY - LIGHT BLUE COVER 8X24*	45	210		
C0824SWTZS	MWG CAB. TOP SURF CLEAR WHITE BODY - WHITE COVER 8X24*	45	210	(**)	
C0824SWTTS	MWG CAB. TOP SURF CLEAR WHITE BODY - BLACK COVER 8X24*	45	210	(**)	
C0924SWTPS	MWG CAB. TOP SURF CLEAR WHITE BODY - LIGHT BLUE COVER 9X24*	45	210	(**)	
C0924SWTZS	MWG CAB. TOP SURF CLEAR WHITE BODY - WHITE COVER 9X24*	45	210	(**)	
C0924SWTTS	MWG CAB. TOP SURF CLEAR WHITE BODY - BLACK COVER 9X24*	45	210	(**)	
C1024SWTPS	MWG CAB. TOP SURF CLEAR WHITE BODY - LIGHT BLUE COVER 10X24*	45	210		
C1024SWTZS	MWG CAB. TOP SURF CLEAR WHITE BODY - WHITE COVER 10X24*	45	210	(**)	
C1024SWTTS	MWG CAB. TOP SURF CLEAR WHITE BODY - BLACK COVER 10X24*	45	210		

Ref	Width (mm)	Length (mm)	Height (mm)
C0724SWTPS	320	500	840
C0724SWTZS	320	500	840
C0724SWTTS	320	500	840
C0824SWTPS	320	500	840
C0824SWTZS	320	500	840
C0824SWTTS	320	500	840
C0924SWTPS	320	500	840
C0924SWTZS	320	500	840
C0924SWTTS	320	500	840
C1024SWTPS	320	500	840
C1024SWTZS	320	500	840
C1024SWTTS	320	500	840

Box: WxLxH	Box: Q.ty	Box: Weight	Pallet: WxLxH	Pallet: Q.ty	Pallet: Weight

Accessories

Ref	Description	Fam.	Subfam.	Note	
PA074	MWG BRINE WELL D=100 MM H=520 MM (CAB. 24″ + BRINE TANK 100L)	45	215		
PA001	MWG CAP FOR BRINE WELL D=100 MM	45	215		

Certificates	Manufacturer	Sectors
	MWG	Domestic

Cabinets for Softeners Top Surf Clear Series

Ref	Description	Fam.	Subfam.	Note	
C0735SWTPS	MWG CAB. TOP SURF CLEAR WHITE BODY - LIGHT BLUE COVER 7X35*	45	210		
C0735SWTZS	MWG CAB. TOP SURF CLEAR WHITE BODY - WHITE COVER 7X35*	45	210	(**)	
C0735SWTTS	MWG CAB. TOP SURF CLEAR WHITE BODY - BLACK COVER 7X35*	45	210	(**)	
C0835SWTPS	MWG CAB. TOP SURF CLEAR WHITE BODY - LIGHT BLUE COVER 8X35*	45	210		
C0835SWTZS	MWG CAB. TOP SURF CLEAR WHITE BODY - WHITE COVER 8X35*	45	210	(**)	
C0835SWTTS	MWG CAB. TOP SURF CLEAR WHITE BODY - BLACK COVER 8X35*	45	210	(**)	
C0935SWTPS	MWG CAB. TOP SURF CLEAR WHITE BODY - LIGHT BLUE COVER 9X35*	45	210		
C0935SWTZS	MWG CAB. TOP SURF CLEAR WHITE BODY - WHITE COVER 9X35*	45	210	(**)	
C0935SWTTS	MWG CAB. TOP SURF CLEAR WHITE BODY - BLACK COVER 9X35*	45	210	(**)	
C1035SWTPS	MWG CAB. TOP SURF CLEAR WHITE BODY - LIGHT BLUE COVER 10X35*	45	210		
C1035SWTZS	MWG CAB. TOP SURF CLEAR WHITE BODY - WHITE COVER 10X35*	45	210	(**)	
C1035SWTTS	MWG CAB. TOP SURF CLEAR WHITE BODY - BLACK COVER 10X35*	45	210	(**)	

Ref	Width (mm)	Length (mm)	Height (mm)
C0735SWTPS	320	500	1140
C0735SWTZS	320	500	1140
C0735SWTTS	320	500	1140
C0835SWTPS	320	500	1140
C0835SWTZS	320	500	1140
C0835SWTTS	320	500	1140
C0935SWTPS	320	500	1140
C0935SWTZS	320	500	1140
C0935SWTTS	320	500	1140
C1035SWTPS	320	500	1140
C1035SWTWS	320	500	1140
C1035SWTTS	320	500	1140

Box: WxLxH	Box: Q.ty	Box: Weight	Pallet: WxLxH	Pallet: Q.ty	Pallet: Weight

Accessories

Ref	Description	Fam.	Subfam.	Note	
PA076	MWG BRINE WELL D=100 MM H=780 MM (CAB. 35″SURF/LINE)	45	215		
PA001	MWG CAP FOR BRINE WELL D=100 MM	45	215		

Certificates	Manufacturer	Sectors
	MWG	Domestic

Cabinets for Softeners New Crystal

- Tanks and covers made in European Union (Italy);
- Cabinets for residential softeners, complete with salt lid and cover of exclusive design with clear insert;
- With MWG tank;
- Materials: tank and salt lid in HDPE; cover in polystyrene;
- Standard colours: white tank and blue, white or black cover;
- On demand and for quantities we can realize customized colours;
- EU design patent no. 003156272.

(**) minimum order quantity = 250 pcs.

Ref	Description	Fam.	Subfam.	Note	
C0717NWCAS	MWG CAB. NEWMINI CRYSTAL WHITE BODY - LIGHT BLUE COVER 7X17*	45	210		
C0717NWCWS	MWG CAB. NEWMINI CRYSTAL WHITE BODY - WHITE COVER 7X17*	45	210	(**)	
C0717NWCDS	MWG CAB. NEWMINI CRYSTAL WHITE BODY - BLACK COVER 7X17*	45	210	(**)	
C0817NWCAS	MWG CAB. NEWMINI CRYSTAL WHITE BODY - LIGHT BLUE COVER 8X17*	45	210		
C0817NWCWS	MWG CAB. NEWMINI CRYSTAL WHITE BODY - WHITE COVER 8X17*	45	210		
C0817NWCDS	MWG CAB. NEWMINI CRYSTAL WHITE BODY - BLACK COVER 8X17*	45	210	(**)	
C0917NWCAS	MWG CAB. NEWMINI CRYSTAL WHITE BODY - LIGHT BLUE COVER 9X17*	45	210		
C0917NWCWS	MWG CAB. NEWMINI CRYSTAL WHITE BODY - WHITE COVER 9X17*	45	210		
C0917NWCDS	MWG CAB. NEWMINI CRYSTAL WHITE BODY - BLACK COVER 9X17*	45	210		
C1017NWCAS	MWG CAB. NEWMINI CRYSTAL WHITE BODY - LIGHT BLUE COVER 10X17*	45	210		
C1017NWCWS	MWG CAB. NEWMINI CRYSTAL WHITE BODY - WHITE COVER 10X17*	45	210		
C1017NWCDS	MWG CAB. NEWMINI CRYSTAL WHITE BODY - BLACK COVER 10X17*	45	210		

Ref	Width (mm)	Length (mm)	height (mm)
C0717NWCAS	320	500	670
C0717NWCWS	320	500	670
C0717NWCDS	320	500	670
C0817NWCAS	320	500	670
C0817NWCWS	320	500	670
C0817NWCDS	320	500	670
C0917NWCAS	320	500	670
C0917NWCWS	320	500	670
C0917NWCDS	320	500	670
C1017NWCAS	320	500	670
C1017NWCWS	320	500	670
C1017NWCDS	320	500	670

Box: WxLxH	Box: Q.ty	Box: Weight	Pallet: WxLxH	Pallet: Q.ty	Pallet: Weight

Accessories

Ref	Description	Fam.	Subfam.	Note	
PA002	MWG BRINE WELL D=100 MM H=340 MM (CAB. 17″)	45	215		
PA001	MWG CAP FOR BRINE WELL D=100 MM	45	215		

Certificates	Manufacturer	Sectors
	MWG	Domestic

Cabinets for Softeners New Crystal

Ref	Description	Fam.	Subfam.	Note	
C0730NWCAS	MWG CAB. NEWMIDI CRYSTAL WHITE BODY - LIGHT BLUE COVER 7X30*	45	210		
C0730NWCWS	MWG CAB. NEWMIDI CRYSTAL WHITE BODY - WHITE COVER 7X30*	45	210		
C0730NWCDS	MWG CAB. NEWMIDI CRYSTAL WHITE BODY - BLACK COVER 7X30*	45	210	(**)	
C0830NWCAS	MWG CAB. NEWMIDI CRYSTAL WHITE BODY - LIGHT BLUE COVER 8X30*	45	210		
C0830NWCWS	MWG CAB. NEWMIDI CRYSTAL WHITE BODY - WHITE COVER 8X30*	45	210		
C0830NWCDS	MWG CAB. NEWMIDI CRYSTAL WHITE BODY - BLACK COVER 8X30*	45	210	(**)	
C0930NWCAS	MWG CAB. NEWMIDI CRYSTAL WHITE BODY - LIGHT BLUE COVER 9X30*	45	210		
C0930NWCWS	MWG CAB. NEWMIDI CRYSTAL WHITE BODY - WHITE COVER 9X30*	45	210		
C0930NWCDS	MWG CAB. NEWMIDI CRYSTAL WHITE BODY - BLACK COVER 9X30*	45	210	(**)	
C1030NWCAS	MWG CAB. NEWMIDI CRYSTAL WHITE BODY - LIGHT BLUE COVER 10X30*	45	210		
C1030NWCWS	MWG CAB. NEWMIDI CRYSTAL WHITE BODY - WHITE COVER 10X30*	45	210		
C1030NWCDS	MWG CAB. NEWMIDI CRYSTAL WHITE BODY - BLACK COVER 10X30*	45	210		

Ref	Width (mm)	Length (mm)	Height (mm)
C0730NWCAS	320	500	1010
C0730NWCWS	320	500	1010
C0730NWCDS	320	500	1010
C0830NWCAS	320	500	1010
C0830NWCWS	320	500	1010
C0830NWCDS	320	500	1010
C0930NWCAS	320	500	1010
C0930NWCWS	320	500	1010
C0930NWCDS	320	500	1010
C1030NWCAS	320	500	1010
C1030NWCWS	320	500	1010
C1030NWCDS	320	500	1010

Box: WxLxH	Box: Q.ty	Box: Weight	Pallet: WxLxH	Pallet: Q.ty	Pallet: Weight

Accessories

Ref	Description	Fam.	Subfam.	Note	
PA009	MWG BRINE WELL D=100 MM H=690 MM (CAB. 30″ + BRINE TANK 140L)	45	230		
PA001	MWG CAP FOR BRINE WELL D=100 MM	45	215		

Certificates	Manufacturer	Sectors
	MWG	Domestic

Cabinets for Softeners New Crystal

Ref	Description	Fam.	Subfam.	Note	
C0735NWCAS	MWG CAB. NEWMAXI CRYSTAL WHITE BODY - LIGHT BLUE COVER 7X35*	45	210		
C0735NWCWS	MWG CAB. NEWMAXI CRYSTAL WHITE BODY - WHITE COVER 7X35*	45	210		
C0735NWCDS	MWG CAB. NEWMAXI CRYSTAL WHITE BODY - BLACK COVER 7X35*	45	210	(**)	
C0835NWCAS	MWG CAB. NEWMAXI CRYSTAL WHITE BODY - LIGHT BLUE COVER 8X35*	45	210		
C0835NWCWS	MWG CAB. NEWMAXI CRYSTAL WHITE BODY - WHITE COVER 8X35*	45	210		
C0835NWCDS	MWG CAB. NEWMAXI CRYSTAL WHITE BODY - BLACK COVER 8X35*	45	210		
C0935NWCAS	MWG CAB. NEWMAXI CRYSTAL WHITE BODY - LIGHT BLUE COVER 9X35*	45	210		
C0935NWCWS	MWG CAB. NEWMAXI CRYSTAL WHITE BODY - WHITE COVER 9X35*	45	210		
C0935NWCDS	MWG CAB. NEWMAXI CRYSTAL WHITE BODY - BLACK COVER 9X35*	45	210		
C1035NWCAS	MWG CAB. NEWMAXI CRYSTAL WHITE BODY - LIGHT BLUE COVER 10X35*	45	210		
C1035NWCWS	MWG CAB. NEWMAXI CRYSTAL WHITE BODY - WHITE COVER 10X35*	45	210		
C1035NWCDS	MWG CAB. NEWMAXI CRYSTAL WHITE BODY - BLACK COVER 10X35*	45	210		

Ref	Width (mm)	Length (mm)	Height (mm)
C0735NWCAS	320	500	1140
C0735NWCWS	320	500	1140
C0735NWCDS	320	500	1140
C0835NWCAS	320	500	1140
C0835NWCWS	320	500	1140
C0835NWCDS	320	500	1140
C0935NWCAS	320	500	1140
C0935NWCWS	320	500	1140
C0935NWCDS	320	500	1140
C1035NWCAS	320	500	1140
C1035NWCWS	320	500	1140
C1035NWCDS	320	500	1140

Box: WxLxH	Box: Q.ty	Box: Weight	Pallet: WxLxH	Pallet: Q.ty	Pallet: Weight

Accessories

Ref	Description	Fam.	Subfam.	Note	
PA004	MWG BRINE WELL D=100 MM H=820 MM (CAB. 35″MAXI)	45	215		
PA001	MWG CAP FOR BRINE WELL D=100 MM	45	215		

Certificates	Manufacturer	Sectors
	MWG	Domestic

Cabinets for Softeners New Iceberg

- Tanks and covers made in European Union (Italy);
- Cabinets for residential softeners, complete with salt lid and cover of exclusive design with clear insert;
- With MWG tank;
- Materials: tank and salt lid in HDPE; cover in polystyrene;
- Standard colours: white tank and blue, white or black cover;
- On demand and for quantities we can realize customized colours;
- EU design patent no. 003156272.

Ref	Description	Fam.	Subfam.	Note	
C0717NWIQS	MWG CAB. NEWMINI ICEBERG WHITE BODY - LIGHT BLUE/WHITE COVER 7X17*	45	210		
C0817NWIQS	MWG CAB. NEWMINI ICEBERG WHITE BODY - LIGHT BLUE/ WHITE COVER 8X17*	45	210		
C0917NWIQS	MWG CAB. NEWMINI ICEBERG WHITE BODY - LIGHT BLUE/WHITE COVER 9X17*	45	210		
C1017NWIQS	MWG CAB. NEWMINI ICEBERG WHITE BODY - LIGHT BLUE/WHITE COVER 10X17*	45	210		

Ref	Width (mm)	Length (mm)	Height (mm)
C0717NWIQS	320	500	670
C0817NWIQS	320	500	670
C0917NWIQS	320	500	670
C1017NWIQS	320	500	670

Box: WxLxH	Box: Q.ty	Box: Weight	Pallet: WxLxH	Pallet: Q.ty	Pallet: Weight

Accessories

Ref	Description	Fam.	Subfam.	Note	
PA002	MWG BRINE WELL D=100 MM H=340 MM (CAB. 17″)	45	215		
PA001	MWG CAP FOR BRINE WELL D=100 MM	45	215		

Certificates	Manufacturer	Sectors
	MWG	Domestic

Cabinets for Softeners New Iceberg

Ref	Description	Fam.	Subfam.	Note	
C0730NWIQS	MWG CAB. NEWMIDI ICEBERG WHITE BODY - LIGHT BLUE/WHITE COVER 7X30*	45	210	(**)	
C0830NWIQS	MWG CAB. NEWMIDI ICEBERG WHITE BODY - LIGHT BLUE/WHITE COVER 8X30*	45	210	(**)	
C0930NWIQS	MWG CAB. NEWMIDI ICEBERG WHITE BODY - LIGHT BLUE/WHITE COVER 9X30*	45	210		
C1030NWIQS	MWG CAB. NEWMIDI ICEBERG WHITE BODY - LIGHT BLUE/WHITE COVER 10X30*	45	210		

Ref	Width (mm)	Length (mm)	Height (mm)
C0730NWIQS	320	500	1010
C0830NWIQS	320	500	1010
C0930NWIQS	320	500	1010
C1030NWIQS	320	500	1010

Box: WxLxH	Box: Q.ty	Box: Weight	Pallet: WxLxH	Pallet: Q.ty	Pallet: Weight

Accessories

Ref	Description	Fam.	Subfam.	Note	
PA009	MWG BRINE WELL D=100 MM H=690 MM (CAB. 30″ + BRINE TANK 140L)	45	230		
PA001	MWG CAP FOR BRINE WELL D=100 MM	45	215		

Certificates	Manufacturer	Sectors
	MWG	Domestic

Cabinets for Softeners New Iceberg

Ref	Description	Fam.	Subfam.	Note	
C0735NWIQS	MWG CAB. NEWMAXI ICEBERG WHITE BODY - LIGHT BLUE/WHITE COVER 7X35*	45	210	(**)	
C0835NWIQS	MWG CAB. NEWMAXI ICEBERG WHITE BODY - LIGHT BLUE/WHITE COVER 8X35*	45	210		
C0935NWIQS	MWG CAB. NEWMAXI ICEBERG WHITE BODY - LIGHT BLUE/WHITE COVER 9X35*	45	210		
C1035NWIQS	MWG CAB. NEWMAXI ICEBERG WHITE BODY - LIGHT BLUE/WHITE COVER 10X35*	45	210		

Ref	Width (mm)	Length (mm)	Height (mm)
C0735NWIQS	320	500	1140
C0835NWIQS	320	500	1140
C0935NWIQS	320	500	1140
C1035NWIQS	320	500	1140

Box: WxLxH	Box: Q.ty	Box: Weight	Pallet: WxLxH	Pallet: Q.ty	Pallet: Weight

Accessories

Ref	Description	Fam.	Subfam.	Note	
PA004	MWG BRINE WELL D=100 MM H=820 MM (CAB. 35˝MAXI)	45	215		
PA001	MWG CAP FOR BRINE WELL D=100 MM	45	215		

Certificates	Manufacturer	Sectors
	MWG	Domestic

Cabinet for Softeners Ocean Series

- Tanks and covers made in European Union (Italy);
- Cabinets for residential softeners, complete with salt lid and cover of exclusive design with clear insert;
- With MWG tank;
- Materials: tank and salt lid in HDPE; cover in polystyrene;
- Standard colours: white tank and blue, white or black cover;
- On demand and for quantities we can realize customized colours;
- EU design patent no. 003156272.

(**) minimum order quantity = 250 pcs.

Ref	Description	Fam.	Subfam.	Note	
C0717NWOAS	MWG CAB. NEWMINI OCEAN WHITE BODY - LIGHT BLUE COVER 7X17*	45	210		
C0717NWOWS	MWG CAB. NEWMINI OCEAN WHITE BODY - WHITE COVER 7X17*	45	210	(**)	
C0717NWODS	MWG CAB. NEWMINI OCEAN WHITE BODY - BLACK COVER 7X17*	45	210	(**)	
C0817NWOAS	MWG CAB. NEWMINI OCEAN WHITE BODY - LIGHT BLUE COVER 8X17*	45	210		
C0817NWOWS	MWG CAB. NEWMINI OCEAN WHITE BODY - WHITE COVER 8X17*	45	210		
C0817NWODS	MWG CAB. NEWMINI OCEAN WHITE BODY - BLACK COVER 8X17*	45	210	(**)	
C0917NWOAS	MWG CAB. NEWMINI OCEAN WHITE BODY - LIGHT BLUE COVER 9X17*	45	210		
C0917NWOWS	MWG CAB. NEWMINI OCEAN WHITE BODY - WHITE COVER 9X17*	45	210		
C0917NWODS	MWG CAB. NEWMINI OCEAN WHITE BODY - BLACK COVER 9X17*	45	210		
C1017NWOAS	MWG CAB. NEWMINI OCEAN WHITE BODY - LIGHT BLUE COVER 10X17*	45	210		
C1017NWOWS	MWG CAB. NEWMINI OCEAN WHITE BODY - WHITE COVER 10X17*	45	210		
C1017NWODS	MWG CAB. NEWMINI OCEAN WHITE BODY - BLACK COVER 10X17*	45	210		

Ref	Width (mm)	Length (mm)	Height (mm)
C0717NWOAS	320	500	670
C0717NWOWS	320	500	670
C0717NWODS	320	500	670
C0817NWOAS	320	500	670
C0817NWOWS	320	500	670
C0817NWODS	320	500	670
C0917NWOAS	320	500	670
C0917NWOWS	320	500	670
C0917NWODS	320	500	670
C1017NWOAS	320	500	670
C1017NWOWS	320	500	670
C1017NWODS	320	500	670

Box: WxLxH	Box: Q.ty	Box: Weight	Pallet: WxLxH	Pallet: Q.ty	Pallet: Weight

Accessories

Ref	Description	Fam.	Subfam.	Note	
PA002	MWG BRINE WELL D=100 MM H=340 MM (CAB. 17″)	45	215		
PA001	MWG CAP FOR BRINE WELL D=100 MM	45	215		

Certificates	Manufacturer	Sectors
	MWG	Domestic

Cabinet for Softeners Ocean Series

Ref	Description	Fam.	Subfam.	Note	
C0730NWOAS	MWG CAB. NEWMIDI OCEAN WHITE BODY - LIGHT BLUE COVER 7X30*	45	210		
C0730NWOWS	MWG CAB. NEWMIDI OCEAN WHITE BODY - WHITE COVER 7X30*	45	210		
C0730NWODS	MWG CAB. NEWMIDI OCEAN WHITE BODY - BLACK COVER 7X30*	45	210	(**)	
C0830NWOAS	MWG CAB. NEWMIDI OCEAN WHITE BODY - LIGHT BLUE COVER 8X30*	45	210		
C0830NWOWS	MWG CAB. NEWMIDI OCEAN WHITE BODY - WHITE COVER 8X30*	45	210	(**)	
C0830NWODS	MWG CAB. NEWMIDI OCEAN WHITE BODY - BLACK COVER 8X30*	45	210	(**)	
C0930NWOAS	MWG CAB. NEWMIDI OCEAN WHITE BODY - LIGHT BLUE COVER 9X30*	45	210		
C0930NWOWS	MWG CAB. NEWMIDI OCEAN WHITE BODY - WHITE COVER 9X30 *	45	210		
C0930NWODS	MWG CAB. NEWMIDI OCEAN WHITE BODY - BLACK COVER 9X30*	45	210		
C1030NWOAS	MWG CAB. NEWMIDI OCEAN WHITE BODY - LIGHT BLUE COVER 10X30*	45	210		
C1030NWOWS	MWG CAB. NEWMIDI OCEAN WHITE BODY - WHITE COVER 10X30*	45	210		
C1030NWODS	MWG CAB. NEWMIDI OCEAN WHITE BODY - BLACK COVER 10X30*	45	210		

Ref	Width (mm)	Length (mm)	Height (mm)
C0730NWOAS	320	500	1010
C0730NWOWS	320	500	1010
C0730NWODS	320	500	1010
C0830NWOAS	320	500	1010
C0830NWOWS	320	500	1010
C0830NWODS	320	500	1010
C0930NWOAS	320	500	1010
C0930NWOWS	320	500	1010
C0930NWODS	320	500	1010
C1030NWOAS	320	500	1010
C1030NWOWS	320	500	1010
C1030NWODS	320	500	1010

Box: WxLxH	Box: Q.ty	Box: Weight	Pallet: WxLxH	Pallet: Q.ty	Pallet: Weight

Accessories

Ref	Description	Fam.	Subfam.	Note	
PA009	MWG BRINE WELL D=100 MM H=690 MM (CAB. 30″ + BRINE TANK 140L)	45	230		
PA001	MWG CAP FOR BRINE WELL D=100 MM	45	215		

Certificates	Manufacturer	Sectors
	MWG	Domestic

Cabinet for Softeners Ocean Series

Ref	Description	Fam.	Subfam.	Note	
C0735NWOAS	MWG CAB. NEWMAXI OCEAN WHITE BODY - LIGHT BLUE COVER 7X35*	45	210		
C0735NWOWS	MWG CAB. NEWMAXI OCEAN WHITE BODY - WHITE COVER 7X35*	45	210		
C0735NWODS	MWG CAB. NEWMAXI OCEAN WHITE BODY - BLACK COVER 7X35*	45	210		
C0835NWOAS	MWG CAB. NEWMAXI OCEAN WHITE BODY - LIGHT BLUE COVER 8X35*	45	210		
C0835NWOWS	MWG CAB. NEWMAXI OCEAN WHITE BODY - WHITE COVER 8X35*	45	210		
C0835NWODS	MWG CAB. NEWMAXI OCEAN WHITE BODY - BLACK COVER 8X35*	45	210		
C0935NWOAS	MWG CAB. NEWMAXI OCEAN WHITE BODY - LIGHT BLUE COVER 9X35*	45	210		
C0935NWOWS	MWG CAB. NEWMAXI OCEAN WHITE BODY - WHITE COVER 9X35*	45	210		
C0935NWODS	MWG CAB. NEWMAXI OCEAN WHITE BODY - BLACK COVER 9X35*	45	210		
C1035NWOAS	MWG CAB. NEWMAXI OCEAN WHITE BODY - LIGHT BLUE COVER 10X35*	45	210		
C1035NWOWS	MWG CAB. NEWMAXI OCEAN WHITE BODY - WHITE COVER 10X35*	45	210		
C1035NWODS	MWG CAB. NEWMAXI OCEAN WHITE BODY - BLACK COVER 10X35*	45	210		

Ref	Width (mm)	Length (mm)	Height (mm)
C0735NWOAS	320	500	1140
C0735NWOWS	320	500	1140
C0735NWODS	320	500	1140
C0835NWOAS	320	500	1140
C0835NWOWS	320	500	1140
C0835NWODS	320	500	1140
C0935NWOAS	320	500	1140
C0935NWOWS	320	500	1140
C0935NWODS	320	500	1140
C1035NWOAS	320	500	1140
C1035NWOWS	320	500	1140
C1035NWODS	320	500	1140

Box: WxLxH	Box: Q.ty	Box: Weight	Pallet: WxLxH	Pallet: Q.ty	Pallet: Weight

Accessories

Ref	Description	Fam.	Subfam.	Note	
PA004	MWG BRINE WELL D=100 MM H=820 MM (CAB. 35˝MAXI)	45	215		
PA001	MWG CAP FOR BRINE WELL D=100 MM	45	215		

Certificates	Manufacturer	Sectors
	MWG	Domestic

Cabinets for Softeners Logix Series

- Tanks and covers made in European Union (Italy);
- Cabinets for residential softeners, complete with salt lid and cover for integrate installation of LOGIX control AUTOTROL valves;
- With MWG tank;
- Materials: tank and salt lid in HDPE; cover in polystyrene;
- Standard colours: white tank and blue, white or black cover;
- On demand and for quantities we can realize customized colours;
- EU design patent no. 003156272.

(**) minimum order quantity = 250 pcs.

Ref	Description	Fam.	Subfam.	Note	
C0717NWLAS	MWG CAB. NEWMINI LOGIX WHITE BODY - LIGHT BLUE COVER 7X17*	45	210		
C0717NWLWS	MWG CAB. NEWMINI LOGIX WHITE BODY - WHITE COVER 7X17*	45	210	(**)	
C0717NWLDS	MWG CAB. NEWMINI LOGIX WHITE BODY - BLACK COVER 7X17*	45	210	(**)	
C0817NWLAS	MWG CAB. NEWMINI LOGIX WHITE BODY - LIGHT BLUE COVER 8X17*	45	210		
C0817NWLWS	MWG CAB. NEWMINI LOGIX WHITE BODY - WHITE COVER 8X17*	45	210		
C0817NWLDS	MWG CAB. NEWMINI LOGIX WHITE BODY - BLACK COVER 8X17*	45	210		
C0917NWLAS	MWG CAB. NEWMINI LOGIX WHITE BODY - LIGHT BLUE COVER 9X17*	45	210	(**)	
C0917NWLWS	MWG CAB. NEWMINI LOGIX WHITE BODY - WHITE COVER 9X17*	45	210	(**)	
C0917NWLDS	MWG CAB. NEWMINI LOGIX WHITE BODY - BLACK COVER 9X17*	45	210	(**)	
C1017NWLAS	MWG CAB. NEWMINI LOGIX WHITE BODY - LIGHT BLUE COVER 10X17*	45	210		
C1017NWLWS	MWG CAB. NEWMINI LOGIX WHITE BODY - WHITE COVER 10X17*	45	210		
C1017NWLDS	MWG CAB. NEWMINI LOGIX WHITE BODY - BLACK COVER 10X17*	45	210	(**)	

Ref	Width (mm)	Length (mm)	Height (mm)
C0717NWLAS	320	500	670
C0717NWLWS	320	500	670
C0717NWLDS	320	500	670
C0817NWLAS	320	500	670
C0817NWLWS	320	500	670
C0817NWLDS	320	500	670
C0917NWLAS	320	500	670
C0917NWLWS	320	500	670
C0917NWLDS	320	500	670
C1017NWLAS	320	500	670
C1017NWLWS	320	500	670
C1017NWLDS	320	500	670

Accessories

Ref	Description	Fam.	Subfam.	Note	
PA002	MWG BRINE WELL D=100 MM H=340 MM (CAB. 17″)	45	215		
PA001	MWG CAP FOR BRINE WELL D=100 MM	45	215		

Certificates	Manufacturer	Sectors
	MWG	Domestic

Cabinets for Softeners Logix Series

Ref	Description	Fam.	Subfam.	Note	
C0730NWLAS	MWG CAB. NEWMIDI LOGIX WHITE BODY - LIGHT BLUE COVER 7X30*	45	210	(**)	
C0730NWLWS	MWG CAB. NEWMIDI LOGIX WHITE BODY - WHITE COVER 7X30*	45	210	(**)	
C0730NWLDS	MWG CAB. NEWMIDI LOGIX WHITE BODY - BLACK COVER 7X30*	45	210	(**)	
C0830NWLAS	MWG CAB. NEWMIDI LOGIX WHITE BODY - LIGHT BLUE COVER 8X30*	45	210		
C0830NWLWS	MWG CAB. NEWMIDI LOGIX WHITE BODY - WHITE COVER 8X30*	45	210		
C0830NWLDS	MWG CAB. NEWMIDI LOGIX WHITE BODY - BLACK COVER 8X30*	45	210	(**)	
C0930NWLAS	MWG CAB. NEWMIDI LOGIX WHITE BODY - LIGHT BLUE COVER 9X30*	45	210		
C0930NWLWS	MWG CAB. NEWMIDI LOGIX WHITE BODY - WHITE COVER 9X30 *	45	210	(**)	
C0930NWLDS	MWG CAB. NEWMIDI LOGIX WHITE BODY - BLACK COVER 9X30 *	45	210	(**)	
C1030NWLAS	MWG CAB. NEWMIDI LOGIX WHITE BODY - LIGHT BLUE COVER 10X30*	45	210		
C1030NWLWS	MWG CAB. NEWMIDI LOGIX WHITE BODY - WHITE COVER 10X30*	45	210	(**)	
C1030NWLDS	MWG CAB. NEWMIDI LOGIX WHITE BODY - BLACK COVER 10X30*	45	210	(**)	

Ref	Width (mm)	Length (mm)	Height (mm)
C0730NWLAS	320	500	1010
C0730NWLWS	320	500	1010
C0730NWLDS	320	500	1010
C0830NWLAS	320	500	1010
C0830NWLWS	320	500	1010
C0830NWLDS	320	500	1010
C0930NWLAS	320	500	1010
C0930NWLWS	320	500	1010
C0930NWLDS	320	500	1010
C1030NWLAS	320	500	1010
C1030NWLWS	320	500	1010
C1030NWLDS	320	500	1010

Box: WxLxH	Box: Q.ty	Box: Weight	Pallet: WxLxH	Pallet: Q.ty	Pallet: Weight

Accessories

Ref	Description	Fam.	Subfam.	Note	
PA009	MWG BRINE WELL D=100 MM H=690 MM (CAB. 30″ + BRINE TANK 140L)	45	230		
PA001	MWG CAP FOR BRINE WELL D=100 MM	45	215		

Certificates	Manufacturer	Sectors
	MWG	Domestic

Cabinets for Softeners Logix Series

Ref	Description	Fam.	Subfam.	Note	
C0735NWLAS	MWG CAB. NEWMAXI LOGIX WHITE BODY - LIGHT BLUE COVER 7X35*	45	210		
C0735NWLWS	MWG CAB. NEWMAXI LOGIX WHITE BODY - WHITE COVER 7X35*	45	210	(**)	
C0735NWLDS	MWG CAB. NEWMAXI LOGIX WHITE BODY - BLACK COVER 7X35*	45	210		
C0835NWLAS	MWG CAB. NEWMAXI LOGIX WHITE BODY - LIGHT BLUE COVER 8X35*	45	210		
C0835NWLWS	MWG CAB. NEWMAXI LOGIX WHITE BODY - WHITE COVER 8X35*	45	210		
C0835NWLDS	MWG CAB. NEWMAXI LOGIX WHITE BODY - BLACK COVER 8X35*	45	210		
C0935NWLAS	MWG CAB. NEWMAXI LOGIX WHITE BODY - LIGHT BLUE COVER 9X35*	45	210		
C0935NWLWS	MWG CAB. NEWMAXI LOGIX WHITE BODY - WHITE COVER 9X35*	45	210		
C0935NWLDS	MWG CAB. NEWMAXI LOGIX WHITE BODY - BLACK COVER 9X35*	45	210		
C1035NWLAS	MWG CAB. NEWMAXI LOGIX WHITE BODY - LIGHT BLUE COVER 10X35*	45	210		
C1035NWLWS	MWG CAB. NEWMAXI LOGIX WHITE BODY - WHITE COVER 10X35*	45	210		
C1035NWLDS	MWG CAB. NEWMAXI LOGIX WHITE BODY - BLACK COVER 10X35*	45	210		

Ref	Width (mm)	Length (mm)	Height (mm)
C0735NWLAS	320	500	1140
C0735NWLWS	320	500	1140
C0735NWLDS	320	500	1140
C0835NWLAS	320	500	1140
C0835NWLWS	320	500	1140
C0835NWLDS	320	500	1140
C0935NWLAS	320	500	1140
C0935NWLWS	320	500	1140
C0935NWLDS	320	500	1140
C1035NWLAS	320	500	1140
C1035NWLWS	320	500	1140
C1035NWLDS	320	500	1140

Box: WxLxH	Box: Q.ty	Box: Weight	Pallet: WxLxH	Pallet: Q.ty	Pallet: Weight

Accessories

Ref	Description	Fam.	Subfam.	Note	
PA004	MWG BRINE WELL D=100 MM H=820 MM (CAB. 35˝MAXI)	45	215		
PA001	MWG CAP FOR BRINE WELL D=100 MM	45	215		

Certificates	Manufacturer	Sectors
	MWG	Domestic

Cabinets for Softeners Crystal Series

- Tanks and covers made in European Union (Italy);
- Cabinets for residential softeners, complete with salt lid and cover of exclusive design with clear insert;
- With MWG tank;
- Materials: tank and salt lid in HDPE; cover in polystyrene;
- Standard colours: white tank and blue, white or black cover;
- On demand and for quantities we can realize customized colours;
- EU design patent no. 003156272.

(**) minimum order quantity = 250 pcs.

Ref	Description	Fam.	Subfam.	Note	
C0717EWCAS	MWG CAB. MINI CRYSTAL WHITE BODY - LIGHT BLUE COVER 7X17*	45	210		
C0717EWCWS	MWG CAB. MINI CRYSTAL WHITE BODY - WHITE COVER 7X17*	45	210	(**)	
C0717EWCDS	MWG CAB. MINI CRYSTAL WHITE BODY - BLACK COVER 7X17*	45	210	(**)	
C0817EWCAS	MWG CAB. MINI CRYSTAL WHITE BODY - LIGHT BLUE COVER 8X17*	45	210		
C0817EWCWS	MWG CAB. MINI CRYSTAL WHITE BODY - WHITE COVER 8X17*	45	210		
C0817EWCDS	MWG CAB. MINI CRYSTAL WHITE BODY - BLACK COVER 8X17*	45	210	(**)	
C0917EWCAS	MWG CAB. MINI CRYSTAL WHITE BODY - LIGHT BLUE COVER 9X17*	45	210		
C0917EWCWS	MWG CAB. MINI CRYSTAL WHITE BODY - WHITE COVER 9X17*	45	210	(**)	
C0917EWCDS	MWG CAB. MINI CRYSTAL WHITE BODY - BLACK COVER 9X17*	45	210	(**)	
C1017EWCAS	MWG CAB. MINI CRYSTAL WHITE BODY - LIGHT BLUE COVER 10X17*	45	210		
C1017EWCWS	MWG CAB. MINI CRYSTAL WHITE BODY - WHITE COVER 10X17*	45	210		
C1017EWCDS	MWG CAB. MINI CRYSTAL WHITE BODY - BLACK COVER 10X17*	45	210		

Ref	Width (mm)	Length (mm)	Height (mm)
C0717EWCAS	320	500	670
C0717EWCWS	320	500	670
C0717EWCDS	320	500	670
C0817EWCAS	320	500	670
C0817EWCWS	320	500	670
C0817EWCDS	320	500	670
C0917EWCAS	320	500	670
C0917EWCWS	320	500	670
C0917EWCDS	320	500	670
C1017EWCAS	320	500	670
C1017EWCWS	320	500	670
C1017EWCDS	320	500	670

Box: WxLxH	Box: Q.ty	Box: Weight	Pallet: WxLxH	Pallet: Q.ty	Pallet: Weight

Accessories

Ref	Description	Fam.	Subfam.	Note	
PA002	MWG BRINE WELL D=100 MM H=340 MM (CAB. 17″)	45	215		
PA001	MWG CAP FOR BRINE WELL D=100 MM	45	215		

Certificates	Manufacturer	Sectors
	MWG	Domestic

Cabinets for Softeners Crystal Series

Ref	Description	Fam.	Subfam.	Note	
C0735EWCAS	MWG CAB. MAXI CRYSTAL WHITE BODY - LIGHT BLUE COVER 7X35*	45	210		
C0735EWCWS	MWG CAB. MAXI CRYSTAL WHITE BODY - WHITE COVER 7X35*	45	210		
C0735EWCDS	MWG CAB. MAXI CRYSTAL WHITE BODY - BLACK COVER 7X35*	45	210	(**)	
C0835EWCAS	MWG CAB. MAXI CRYSTAL WHITE BODY - LIGHT BLUE COVER 8X35*	45	210		
C0835EWCWS	MWG CAB. MAXI CRYSTAL WHITE BODY - WHITE COVER 8X35*	45	210		
C0835EWCDS	MWG CAB. MAXI CRYSTAL WHITE BODY - BLACK COVER 8X35*	45	210		
C0935EWCAS	MWG CAB. MAXI CRYSTAL WHITE BODY - LIGHT BLUE COVER 9X35*	45	210		
C0935EWCWS	MWG CAB. MAXI CRYSTAL WHITE BODY - WHITE COVER 9X35*	45	210		
C0935EWCDS	MWG CAB. MAXI CRYSTAL WHITE BODY - BLACK COVER 9X35*	45	210	(**)	
C1035EWCAS	MWG CAB. MAXI CRYSTAL WHITE BODY - LIGHT BLUE COVER 10X35*	45	210		
C1035EWCWS	MWG CAB. MAXI CRYSTAL WHITE BODY - WHITE COVER 10X35*	45	210		
C1035EWCDS	MWG CAB. MAXI CRYSTAL WHITE BODY - BLACK COVER 10X35*	45	210		

Ref	Width (mm)	Length (mm)	Height (mm)
C0735EWCAS	320	500	1140
C0735EWCWS	320	500	1140
C0735EWCDS	320	500	1140
C0835EWCAS	320	500	1140
C0835EWCWS	320	500	1140
C0835EWCDS	320	500	1140
C0935EWCAS	320	500	1140
C0935EWCWS	320	500	1140
C0935EWCDS	320	500	1140
C1035EWCAS	320	500	1140
C1035EWCWS	320	500	1140
C1035EWCDS	320	500	1140

Box: WxLxH	Box: Q.ty	Box: Weight	Pallet: WxLxH	Pallet: Q.ty	Pallet: Weight

Accessories

Ref	Description	Fam.	Subfam.	Note	
PA004	MWG BRINE WELL D=100 MM H=820 MM (CAB. 35″MAXI)	45	215		
PA001	MWG CAP FOR BRINE WELL D=100 MM	45	215		

Certificates	Manufacturer	Sectors
	MWG	Domestic

Cabinets for Softeners Iceberg Series

- Tanks and covers made in European Union (Italy);
- Cabinets for residential softeners, complete with salt lid and cover of exclusive design;
- Materials: tank and salt lid in HDPE; cover in polystyrene;
- With MWG pressure tank;
- Standard colours: white tank and blue (or white or black) cover with white insert;
- On demand and for quantities we can realize customized colours;
- EU design patent no. 003156272.

(**) minimum order quantity = 250 pcs.

Ref	Description	Fam.	Subfam.	Note	
C0717EWIQS	MWG CAB. MINI ICEBERG WHITE BODY - LIGHT BLUE/WHITE BODY COVER 7X17*	45	210	(**)	
C0817EWIQS	MWG CAB. MINI ICEBERG WHITE BODY - LIGHT BLUE/WHITE COVER 8X17*	45	210		
C0917EWIQS	MWG CAB. MINI ICEBERG WHITE BODY - LIGHT BLUE/WHITE COVER 9X17*	45	210		
C1017EWIQS	MWG CAB. MINI ICEBERG WHITE BODY - LIGHT BLUE/WHITE COVER 10X17*	45	210		

Ref	Width (mm)	Length (mm)	Height (mm)
C0717EWIQS	320	500	670
C0817EWIQS	320	500	670
C0917EWIQS	320	500	670
C1017EWIQS	320	500	670

Box: WxLxH	Box: Q.ty	Box: Weight	Pallet: WxLxH	Pallet: Q.ty	Pallet: Weight

Certificates	Manufacturer	Sectors
	MWG	Domestic

Ref	Description	Fam.	Subfam.	Note	
C0735EWIQS	MWG CAB. MAXI ICEBERG WHITE BODY - LIGHT BLUE/WHITE COVER 7X35*	45	210		
C0835EWIQS	MWG CAB. MAXI ICEBERG WHITE BODY - LIGHT BLUE/WHITE COVER 8X35*	45	210		
C0935EWIQS	MWG CAB. MAXI ICEBERG WHITE BODY - LIGHT BLUE/WHITE COVER 9X35*	45	210		
C1035EWIQS	MWG CAB. MAXI ICEBERG WHITE BODY - LIGHT BLUE/WHITE COVER 10X35*	45	210		

Ref	Width (mm)	Length (mm)	Height (mm)
C0735EWIQS	320	500	1140
C0835EWIQS	320	500	1140
C0935EWIQS	320	500	1140
C1035EWIQS	320	500	1140

Box: WxLxH	Box: Q.ty	Box: Weight	Pallet: WxLxH	Pallet: Q.ty	Pallet: Weight

Certificates	Manufacturer	Sectors
	MWG	Domestic

Cabinets for Softeners Iceberg Series

Accessories

Ref	Description	Fam.	Subfam.	Note	
PA002	MWG BRINE WELL D=100 MM H=340 MM (CAB. 17″)	45	215		
PA001	MWG CAP FOR BRINE WELL D=100 MM	45	215		

Accessories

Ref	Description	Fam.	Subfam.		
PA004	MWG BRINE WELL D=100 MM H=820 MM (CAB. 35″MAXI)	45	215		
PA001	MWG CAP FOR BRINE WELL D=100 MM	45	215		

Cabinets for Softeners Joker Series

Cab. JOKER

- Tanks and covers made in European Union (Italy);
- JOKER brine/resin tanks that can be combined in special bi-blocs cabinets;
- Capacity as brine tank 82 liters;
- Suitable to fit 7”- 8” - 9” - 10” x 35” tanks as resin tank;
- Overall dimensions 310 x 310 mm height 900 mm;
- Materials: tank in HDPE; cover in ABS;
- Standard colours: white tank and blue, white or black cover;
- With MWG pressure tank;
- On demand and for quantities we can realize customized colours;
- EU design patent no. 003156272.

(**) minimum order quantity = 250 pcs.

Ref	Description	Fam.	Subfam.	Note	
C0735AWJAX	MWG CAB. JOKER WHITE BODY - LIGHT BLUE COVER 7X35*	45	210	(**)	
C0735AWJWX	MWG CAB. JOKER WHITE BODY - WHITE COVER 7X35*	45	210	(**)	
C0735AWJDX	MWG CAB. JOKER WHITE BODY - BLACK COVER 7X35*	45	210	(**)	
C0835AWJAX	MWG CAB. JOKER WHITE BODY - LIGHT BLUE COVER 8X35*	45	210		
C0835AWJWX	MWG CAB. JOKER WHITE BODY - WHITE COVER 8X35*	45	210	(**)	
C0835AWJDX	MWG CAB. JOKER WHITE BODY - BLACK COVER 8X35*	45	210		
C0935AWJAX	MWG CAB. JOKER WHITE BODY - LIGHT BLUE COVER 9X35*	45	210		
C0935AWJWX	MWG CAB. JOKER WHITE BODY - WHITE COVER 9X35*	45	210	(**)	
C0935AWJDX	MWG CAB. JOKER WHITE BODY - BLACK COVER 9X35*	45	210		
C1035AWJAX	MWG CAB. JOKER WHITE BODY - LIGHT BLUE COVER 10X35*	45	210		
C1035AWJWX	MWG CAB. JOKER WHITE BODY - WHITE COVER 10X35*	45	210	(**)	
C1035AWJDX	MWG CAB. JOKER WHITE BODY - BLACK COVER 10X35*	45	210	(**)	

Box: WxLxH	Box: Q.ty	Box: Weight	Pallet: WxLxH	Pallet: Q.ty	Pallet: Weight

Accessories

Ref	Description	Fam.	Subfam.	Note	
PA004	MWG BRINE WELL D=100 MM H=820 MM (CAB. 35″MAXI)	45	215		
PA001	MWG CAP FOR BRINE WELL D=100 MM	45	215		

Certificates	Manufacturer	Sectors
	MWG	Domestic

JOKER A JOKER B

Joker brine tanks

Ref	Description	Fam.	Subfam.	Note	
T0082AWAA	MWG BRINE TANK JOKER A WHITE BODY - LIGHT BLUE COVER*	45	220		
T0082AWAW	MWG BRINE TANK JOKER A WHITE BODY - WHITE COVER*	45	220		
T0082AWAD	MWG BRINE TANK JOKER A WHITE BODY - BLACK COVER *	45	220		
T0082BWBA	MWG BRINE TANK JOKER B WHITE BODY - LIGHT BLUE COVER*	45	220		
T0082BWBW	MWG BRINE TANK JOKER B WHITE BODY - WHITE COVER*	45	220		
T0082BWBD	MWG BRINE TANK JOKER B WHITE BODY - BLACK COVER*	45	220		

Box: WxLxH	Box: Q.ty	Box: Weight	Pallet: WxLxH	Pallet: Q.ty	Pallet: Weight

Certificates	Manufacturer	Sectors
	MWG	Domestic

Cabinets for Softeners New Series

- Tanks and salt lids made in European Union (Italy); - Cabinets for residential softeners;
- Materials: tank in HDPE; salt lid in polystyrene; - Standard colours: tank and salt lid white;
- With MWG pressure tank;
- On demand and for quantities we can realize customized colours; - EU design patent no. 003156272.

(**) minimum order quantity = 250 pcs.

Ref	Description	Fam.	Subfam.	Note	
C0717NWXXS	MWG CAB. NEWMINI WHITE BODY - NO COVER 7X17*	45	210	(**)	
C0817NWXXS	MWG CAB. NEWMINI WHITE BODY - NO COVER 8X17*	45	210		
C0917NWXXS	MWG CAB. NEWMINI WHITE BODY - NO COVER 9X17*	45	210	(**)	
C1017NWXXS	MWG CAB. NEWMINI WHITE BODY - NO COVER 10X17*	45	210		

Ref	Width (mm)	Length (mm)	Height (mm)
C0717NWXXS	320	500	435
C0817NWXXS	320	500	435
C0917NWXXS	320	500	435
C1017NWXXS	320	500	435

Box: WxLxH	Box: Q.ty	Box: Weight	Pallet: WxLxH	Pallet: Q.ty	Pallet: Weight

Accessories

Ref	Description	Fam.	Subfam.	Note	
PA002	MWG BRINE WELL D=100 MM H=340 MM (CAB. 17″)	45	215		
PA001	MWG CAP FOR BRINE WELL D=100 MM	45	215		

Ref	Description	Fam.	Subfam.	Note	
C0730NWXXS	MWG CAB. NEWMIDI WHITE BODY - NO COVER 7X30*	45	210		
C0830NWXXS	MWG CAB. NEWMIDI WHITE BODY - NO COVER 8X30*	45	210		
C0930NWXXS	MWG CAB. NEWMIDI WHITE BODY - NO COVER 9X30*	45	210		
C1030NWXXS	MWG CAB. NEWMIDI WHITE BODY - NO COVER 10X30*	45	210		

Ref	Width (mm)	Length (mm)	Height (mm)
C0730NWXXS	320	500	775
C0830NWXXS	320	500	775
C0930NWXXS	320	500	775
C1030NWXXS	320	500	775

Box: WxLxH	Box: Q.ty	Box: Weight	Pallet: WxLxH	Pallet: Q.ty	Pallet: Weight

Accessories

Ref	Description	Fam.	Subfam.	Note	
PA009	MWG BRINE WELL D=100 MM H=690 MM (CAB. 30″ + BRINE TANK 140L)	45	230		
PA001	MWG CAP FOR BRINE WELL D=100 MM	45	215		

Certificates	Manufacturer	Sectors
	MWG	Domestic

Cabinets for Softeners New Series

Ref	Description	Fam.	Subfam.	Note	
C0735NWXXS	MWG CAB. NEWMAXI WHITE BODY - NO COVER 7X35*	45	210		
C0835NWXXS	MWG CAB. NEWMAXI WHITE BODY - NO COVER 8X35*	45	210		
C0935NWXXS	MWG CAB. NEWMAXI WHITE BODY - NO COVER 9X35*	45	210		
C1035NWXXS	MWG CAB. NEWMAXI WHITE BODY - NO COVER 10X35*	45	210		

Ref	Width (mm)	Length (mm)	Height (mm)
C0735NWXXS	320	500	895
C0835NWXXS	320	500	895
C0935NWXXS	320	500	895
C1035NWXXS	320	500	895

Box: WxLxH	Box: Q.ty	Box: Weight	Pallet: WxLxH	Pallet: Q.ty	Pallet: Weight

Accessories

Ref	Description	Fam.	Subfam.	Note	
PA004	MWG BRINE WELL D=100 MM H=820 MM (CAB. 35″MAXI)	45	215		
PA001	MWG CAP FOR BRINE WELL D=100 MM	45	215		

Certificates	Manufacturer	Sectors
	MWG	Domestic

Cabinets for Softeners “Mini” - “Maxi” Series

- Tanks and salt lids made in European Union (Italy);
- Cabinets for residential softeners;
- Materials: tank in HDPE; salt lid in polystyrene;
- Standard colours: tank and salt lid white;
- With MWG pressure tank;
- On demand and for quantities we can realize customized colours;
- EU design patent no. 003156272.

(**) minimum order quantity = 250 pcs.

Ref	Description	Fam.	Subfam.	Note	
C0717EWXXS	MWG CAB. MINI WHITE BODY - NO COVER 7X17*	45	210		
C0817EWXXS	MWG CAB. MINI WHITE BODY - NO COVER 8X17*	45	210		
C0917EWXXS	MWG CAB. MINI WHITE BODY - NO COVER 9X17*	45	210		
C1017EWXXS	MWG CAB. MINI WHITE BODY - NO COVER 10X17*	45	210		

Ref	Width (mm)	Length (mm)	Height (mm)
C0717EWXXS	320	500	435
C0817EWXXS	320	500	435
C0917EWXXS	320	500	435
C1017EWXXS	320	500	435

Box: WxLxH	Box: Q.ty	Box: Weight	Pallet: WxLxH	Pallet: Q.ty	Pallet: Weight

Accessories

Ref	Description	Fam.	Subfam.	Note	
PA002	MWG BRINE WELL D=100 MM H=340 MM (CAB. 17″)	45	215		
PA001	MWG CAP FOR BRINE WELL D=100 MM	45	215		

Certificates	Manufacturer	Sectors
	MWG	Domestic

Cabinets for Softeners “Mini” - “Maxi” Series

Ref	Description	Fam.	Subfam.	Note	
C0735EWXXS	MWG CAB. MAXI WHITE BODY - NO COVER 7X35*	45	210		
C0835EWXXS	MWG CAB. MAXI WHITE BODY - NO COVER 8X35*	45	210		
C0935EWXXS	MWG CAB. MAXI WHITE BODY - NO COVER 9X35*	45	210	(**)	
C1035EWXXS	MWG CAB. MAXI WHITE BODY - NO COVER 10X35*	45	210		

Ref	Width (mm)	Length (mm)	Height (mm)
C0735EWXXS	320	500	895
C0835EWXXS	320	500	895
C0935EWXXS	320	500	895
C1035EWXXS	320	500	895

Box: WxLxH	Box: Q.ty	Box: Weight	Pallet: WxLxH	Pallet: Q.ty	Pallet: Weight

Accessories

Ref	Description	Fam.	Subfam.	Note	
PA004	MWG BRINE WELL D=100 MM H=820 MM (CAB. 35˝MAXI)	45	215		
PA001	MWG CAP FOR BRINE WELL D=100 MM	45	215		

Certificates	Manufacturer	Sectors
	MWG	Domestic

EUROTROL®
WATER TREATMENT COMPONENTS

Brine tanks MWG

Back to index

Residential Square Brine Tank

- Made in European Union (Italy);
- Brine tank material HDPE;
- Complete with cover in ABS;
- Dimensions 380 x 380 mm, height 790 mm;
- Capacity 85 liters;
- Available multiple packaging of 30 pcs per pallet;
- EU design patent no. 003156272;
- Please, don't put salt in the brine tank more than half capacity.

Ref	Description	Fam.	Subfam.		
T0085QWQA	MWG SQUARE BRINE TANK WHITE BODY - LIGHT BLUE COVER*	45	220		
T0085QWQW	MWG SQUARE BRINE TANK WHITE BODY - WHITE COVER*	45	220		
T0085QWQD	MWG SQUARE BRINE TANK WHITE BODY - BLACK COVER*	45	220		

Ref	Description	Tank colour	Cover colour
T0085QWQA	MWG SQUARE BRINE TANK WHITE BODY - LIGHT BLUE COVER*	White	Blue
T0085QWQW	MWG SQUARE BRINE TANK WHITE BODY - WHITE COVER*	White	White
T0085QWQD	MWG SQUARE BRINE TANK WHITE BODY - BLACK COVER*	White	Black

Box: WxLxH	Box: Q.ty	Box: Weight	Pallet: WxLxH	Pallet: Q.ty	Pallet: Weight

Certificates	Manufacturer	Sectors
	MWG	Domestic

Accessories: Salt grid

- Made in European Union (Italy);
- Material HDPE;
- Height 200 mm;
- Hole for brine well diameter 100 mm;
- Salt gride holes 3 mm.

Ref	Description	Fam.	Subfam.		
PC006	MWG SALT GRIDE FOR SQUARE BRINE TANK*	45	230		

Box: WxLxH	Box: Q.ty	Box: Weight	Pallet: WxLxH	Pallet: Q.ty	Pallet: Weight

Certificates	Manufacturer	Sectors
	MWG	Domestic

Brine well

- Material PVC with cover;
- Diameter 100 mm;
- Height 640 mm.

Ref	Description	Fam.	Subfam.		
PA008	MWG BRINE WELL D=100 MM H=640 MM (SQUARE BRINE TANK)	45	230		
PA001	MWG CAP FOR BRINE WELL D=100 MM	45	215		

Box: WxLxH	Box: Q.ty	Box: Weight	Pallet: WxLxH	Pallet: Q.ty	Pallet: Weight

Certificates	Manufacturer	Sectors
		Domestic

Residential Round Brine Tanks

- Made in European Union (Italy);
- Brine tanks complete with cover;
- Material PE medium density, rotomolded;
- Single or multiple packaging of 20 pcs per pallet for 100 liters and 140 liters brine tanks and 16 pcs per pallet for 190 liters brine tanks;
- Colour white opaque UVA ray resistant;
- Cover colours available: white, blue or black;
- EU design patent no. 003156272;
- Please, don't put salt in the brine tank more than half capacity..

Ref	Description	Fam.	Subfam.		
T0100CWCW	MWG BRINE TANK LT 100 WHITE BODY - WHITE COVER*	45	221		
T0100CWCA	MWG BRINE TANK LT 100 WHITE BODY - LIGHT BLUE COVER*	45	221		
T0100CWCD	MWG BRINE TANK LT 100 WHITE BODY - BLACK COVER*	45	221		

Ref	Capacity (liters)	Cover colour	A (mm)	B (mm)	C (mm)
T0100CWCW	100	White	460	616	565
T0100CWCA	100	Light Blue	460	616	565
T0100CWCD	100	Black	460	616	565

Box: WxLxH	Box: Q.ty	Box: Weight	Pallet: WxLxH	Pallet: Q.ty	Pallet: Weight
			105x105x230	24	110

Certificates	Manufacturer	Sectors
	MWG	Domestic, Commercial

Ref	Description	Fam.	Subfam.		
T0140CWCW	MWG BRINE TANK LT 140 WHITE BODY - WHITE COVER*	45	221		
T0140CWCA	MWG BRINE TANK LT 140 WHITE BODY - LIGHT BLUE COVER*	45	221		
T0140CWCD	MWG BRINE TANK LT 140 WHITE BODY - BLACK COVER*	45	221		

Ref	Capacity (Liters)	Cover colour	A (mm)	B (mm)	C (mm)
T0140CWCW	140	White	460	843	565
T0140CWCA	140	Light Blue	460	843	565
T0140CWCD	140	Black	460	843	565

Box: WxLxH	Box: Q.ty	Box: Weight	Pallet: WxLxH	Pallet: Q.ty	Pallet: Weight
			105x105x225	20	140

Certificates	Manufacturer	Sectors
	MWG	Domestic, Commercial

Residential Round Brine Tanks

Ref	Description	Fam.	Subfam.		
T0190CWCW	MWG BRINE TANK LT 190 WHITE BODY - WHITE COVER*	45	222		
T0190CWCA	MWG BRINE TANK LT 190 WHITE BODY - LIGHT BLUE COVER*	45	222		
T0190CWCD	MWG BRINE TANK LT 190 WHITE BODY - BLACK COVER*	45	222		

Ref	Capacity (liters)	Cover color	A (mm)	B (mm)	C (mm)
T0190CWCW	190	White	460	1123	565
T0190CWCA	190	Light Blue	460	1123	565
T0190CWCD	190	Black	460	1123	565

Box: WxLxH	Box: Q.ty	Box: Weight	Pallet: WxLxH	Pallet: Q.ty	Pallet: Weight
			105x105x230	16	130

Certificates	Manufacturer	Sectors
	MWG	Domestic, Commercial

Residential Round Brine Tanks

Accessories: Salt grid

- Made in European Union (Italy);
- Material PE medium density;
- Hole for brine well diameter 100 mm;
- Salt gride holes ˜ 3 mm.

Ref	Description	Fam.	Subfam.		
PC031	MWG SALT GRIDE FOR BRINE TANK LT 100-140-190 H=130	45	230		

Ref	Description	Height (mm)	Diameter (mm)
PC031	MWG SALT GRIDE FOR BRINE TANK LT 100-140-190 H=130	130	475

Box: WxLxH	Box: Q.ty	Box: Weight	Pallet: WxLxH	Pallet: Q.ty	Pallet: Weight

Certificates	Manufacturer	Sectors
	MWG	Domestic

Ref	Description	Fam.	Subfam.		
PC032	MWG SALT GRIDE FOR BRINE TANK LT 100-140-190 H=200 *	45	230		

Ref	Description	Height (mm)	Diameter (mm)
PC032	MWG SALT GRIDE FOR BRINE TANK LT 100-140-190 H=200 *	200	475

Box: WxLxH	Box: Q.ty	Box: Weight	Pallet: WxLxH	Pallet: Q.ty	Pallet: Weight

Certificates	Manufacturer	Sectors
	MWG	Domestic

Ref	Description	Fam.	Subfam.		
PC033	MWG SALT GRIDE FOR BRINE TANK LT 100-140-190 H=270 *	45	230		

Ref	Description	Height (mm)	Diameter (mm)
PC033	MWG SALT GRIDE FOR BRINE TANK LT 100-140-190 H=270 *	270	475

Box: WxLxH	Box: Q.ty	Box: Weight	Pallet: WxLxH	Pallet: Q.ty	Pallet: Weight

Certificates	Manufacturer	Sectors
	MWG	Domestic

Residential Round Brine Tanks

Brine well

- Material PVC with cover;
- Diameter 100 mm

Ref	Description	Fam.	Subfam.	Disp.Stock	
PA074	MWG BRINE WELL D=100 MM H=520 MM (CAB. 24″ + BRINE TANK 100L)	45	215		
PA001	MWG CAP FOR BRINE WELL D=100 MM	45	215		

Ref	Description	Height (mm)	For brine tanks (liters)
PA074	MWG BRINE WELL D=100 MM H=520 MM (CAB. 24″ + BRINE TANK 100L)	520	100

Certificates	Manufacturer	Sectors
		Domestic

Ref	Description	Fam.	Subfam.		
PA009	MWG BRINE WELL D=100 MM H=690 MM (CAB. 30″ + BRINE TANK 140L)	45	230		
PA001	MWG CAP FOR BRINE WELL D=100 MM	45	215		

Ref	Description	Height (mm)	For brine tanks (liters)
PA009	MWG BRINE WELL D=100 MM H=690 MM (CAB. 30″ + BRINE TANK 140L)	690	140

Certificates	Manufacturer	Sectors
		Domestic

Ref	Description	Fam.	Subfam.		
PA014	MWG BRINE WELL D=100 MM H=970 MM (BRINE TANK 190L)	45	230		
PA001	MWG CAP FOR BRINE WELL D=100 MM	45	215		

Ref	Description	Height (mm)	For brine tanks (liters)
PA014	MWG BRINE WELL D=100 MM H=970 MM (BRINE TANK 190L)	970	190

Certificates	Manufacturer	Sectors
		Domestic

Industrial Round Brine Tanks

- Made in European Union (Italy);
- Brine tanks complete with cover;
- Material PE medium density, rotomolded;
- Single or multiple packaging of 3 pcs per pallet;
- Colour white opaque UVA ray resistant;
- Cover colours available: white, blue or black;
- EU design patent no. 003156272;
- Please, don't put salt in the brine tank more than half capacity.

Ref	Description	Fam.	Subfam.		
T0340CWCW	MWG BRINE TANK LT 340 WHITE BODY - WHITE COVER*	45	223		
T0340CWCA	MWG BRINE TANK LT 340 WHITE BODY - LIGHT BLUE COVER*	45	223		
T0340CWCD	MWG BRINE TANK LT 340 WHITE BODY - BLACK COVER*	45	223		

Ref	Capacity (liters)	Cover color	A (mm)	B (mm)	C (mm)
T0340CWCW	340	White	594	1200	723
T0340CWCA	340	Light Blu	594	1200	723
T0340CWCD	340	Black	594	1200	723

Box: WxLxH	Box: Q.ty	Box: Weight	Pallet: WxLxH	Pallet: Q.ty	Pallet: Weight
			80x80x215	3	40

Certificates	Manufacturer	Sectors
	MWG	Commercial, Industrial

Ref	Description	Fam.	Subfam.		
T0460CWCW	MWG BRINE TANK LT 460 WHITE BODY - WHITE COVER*	45	223		
T0460CWCA	MWG BRINE TANK LT 460 WHITE BODY - LIGHT BLUE*	45	223		
T0460CWCD	MWG BRINE TANK LT 460 WHITE BODY - BLACK COVER*	45	223		

Ref	Capacity (liters)	Cover color	A (mm)	B (mm)	C (mm)
T0460CWCW	460	White	703	1196	833
T0460CWCA	460	Light Blu	703	1196	833
T0460CWCD	460	Black	703	1196	833

Box: WxLxH	Box: Q.ty	Box: Weight	Pallet: WxLxH	Pallet: Q.ty	Pallet: Weight
			80x80x210	3	55

Certificates	Manufacturer	Sectors
	MWG	Commercial, Industrial

Industrial Round Brine Tanks

Accessories: Salt grid

- Made in European Union (Italy);
- Material PE medium density;
- Hole for brine well diameter 160 mm;
- Salt gride holes □ = 5 mm.

Ref	Description	Fam.	Subfam.		
PC070	MWG SALT GRIDE FOR BRINE TANK LT 340 H=375	45	230		
PC071	MWG SALT GRIDE FOR BRINE TANK 460 LT H=375	45	230		

Ref	Height (mm)	Diameter (mm)	For brine tanks (liters)
PC070	375	600	340
PC071	375	700	460

Box: WxLxH	Box: Q.ty	Box: Weight	Pallet: WxLxH	Pallet: Q.ty	Pallet: Weight

Certificates	Manufacturer	Sectors
	MWG	Commercial, Industrial

Brine well

- Material PVC with cover;
- Diameter 160 mm;
- Height 1050 mm.

Ref	Description	Fam.	Subfam.		
PA016T	MWG BRINE WELL D=160 MM H=1050 MM (IND. BRINE TANK)	45	230		
PA058	MWG CAP FOR BRINE WELL D=160 MM	45	230		

Certificates	Manufacturer	Sectors
		Commercial, Industrial

Industrial Round Brine Tanks

- Made in European Union (Italy);
- Brine tanks complete with cover;
- Material PE medium density, rotomolded;
- Single or multiple packaging of 3 pcs per pallet;
- Colour white opaque UVA ray resistant;
- Cover colours available: white, blue or black;
- EU design patent no. 003156272;
- Please, don't put salt in the brine tank more than half capacity.

Ref	Description	Fam.	Subfam.		
T0670CWCW	MWG BRINE TANK LT 670 WHITE BODY - WHITE COVER*	45	224		
T0670CWCA	MWG BRINE TANK LT 670 WHITE BODY - LIGHT BLUE COVER*	45	224		
T0670CWCD	MWG BRINE TANK LT 670 WHITE BODY - BLACK COVER*	45	224		

Ref	Capacity (liters)	Cover color	A (mm)	B (mm)	C (mm)
T0670CWCW	670	White	847	1196	973
T0670CWCA	670	Light Blu	847	1196	973
T0670CWCD	670	Black	847	1196	973

Box: WxLxH	Box: Q.ty	Box: Weight	Pallet: WxLxH	Pallet: Q.ty	Pallet: Weight
			80x80x210	3	70

Certificates	Manufacturer	Sectors
	MWG	Industrial

Ref	Description	Fam.	Subfam.		
T0920CWCW	MWG BRINE TANK LT 920 WHITE BODY - WHITE COVER*	45	224		
T0920CWCA	MWG BRINE TANK LT 920 WHITE BODY - LIGHT BLUE COVER*	45	224		
T0920CWCD	MWG BRINE TANK LT 920 WHITE BODY - BLACK COVER*	45	224		

Ref	Capacity (liters)	Cover color	A (mm)	B (mm)	C (mm)
T0920CWCW	920	White	997	1206	1123
T0920CWCA	920	Light Blu	997	1206	1123
T0920CWCD	920	Black	997	1206	1123

Box: WxLxH	Box: Q.ty	Box: Weight	Pallet: WxLxH	Pallet: Q.ty	Pallet: Weight
			105x105x235	3	85

Certificates	Manufacturer	Sectors
	MWG	Industrial

Industrial Round Brine Tanks

Accessories: Salt grid

- Made in European Union (Italy);
- Material PE medium density;
- Hole for brine well diameter 160 mm;
- Salt gride holes □ = 5 mm.

Ref	Description	Fam.	Subfam.		
PC072	MWG SALT GRIDE FOR BRINE TANK LT 670 H=375	45	230		
PC073	MWG SALT GRIDE FOR BRINE TANK LT 920 H=375	45	230		

Ref	Height (mm)	Diameter (mm)	For brine tanks (liters)
PC072	375	835	670
PC073	375	1010	920

Box: WxLxH	Box: Q.ty	Box: Weight	Pallet: WxLxH	Pallet: Q.ty	Pallet: Weight

Certificates	Manufacturer	Sectors
	MWG	Industrial

Brine well

- Material PVC with cover;
- Diameter 160 mm;
- Height 1050 mm.

Ref	Description	Fam.	Subfam.		
PA016T	MWG BRINE WELL D=160 MM H=1050 MM (IND. BRINE TANK)	45	230		
PA058	MWG CAP FOR BRINE WELL D=160 MM	45	230		

Certificates	Manufacturer	Sectors
		Industrial

Potassium Permanganate Feeder

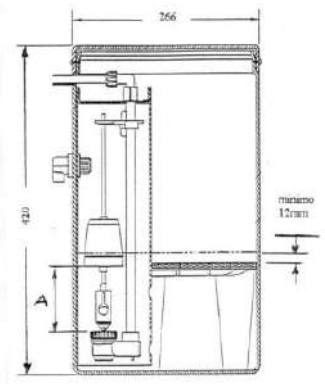

- Feeder for potassium permanganate solution, to realize automatic iron removal systems with manganese greensand;
- Complete with floating valve, well, special grid for permanganate, overflow, safety screw for cover;
- Material: polyethylene;
- Dimensions: diameter 266 mm, height 420 mm;
- Storage KMnO4 capacity: 13,6 kg;
- Connection for ⅜” tubing;
- Colour black.

Float setting:

- Suggested dose of regenerant: 2 ÷ 4 g KMnO4 per greensand liter KMnO4 solution: 30 g/l at 10°C 60 g/l at 22°C
- Minimum A floating setting at 108 mm is equivalent to 4 liters of solution.

Ref	Description	Fam.	Subfam.		
AV120	COMPLETE PERMANGANATE FEEDER FOR 255FA -268FA	10	62		

Certificates	Manufacturer	Sectors
		Domestic

EUROTROL®
WATER TREATMENT COMPONENTS

Reverse osmosis membranes
MWG, CSM, VONTRON

Back to index

MWG Membranes

Ref	Description	Fam.	Subfam.		
MMRO1812-50	MWG 1.8″ MEMBRANE RO1812-50	30	151		
MMRO1812-75	MWG 1.8″ MEMBRANE RO1812-75	30	151		
MMRO2012-100	MWG 2″ MEMBRANE RO2012-100	30	151		
MMRO2012-150	MWG 2″ MEMBRANE RO2012-150	30	151		
MMRO2812-200	MWG 2.8″ MEMBRANE RO2812-200	30	156		
MMRO3012-300	MWG 3″ MEMBRANE RO3012-300	30	156		
MMRO3012-400	MWG 3″ MEMBRANE RO3012-400	30	156		
MMNF1812	MWG 1.8″ MEMBRANE NF-1812	30	151		
MMNF2012	MWG 2″ MEMBRANE NF-2012	30	151		
MMNF3012	MWG 3″ MEMBRANE NF-3012	30	156		
MMXLP2521	MWG 2.5″ MEMBRANE XLP-2521	30	161		
MMXLP2540	MWG 2.5″ MEMBRANE XLP-2540	30	161		
MMXLP4021	MWG 4″ MEMBRANE XLP-4021	30	162		
MMXLP4040	MWG 4″ MEMBRANE XLP-4040	30	162		
MMXLP8040HR	MWG 8″ MEMBRANE XLP-8040HR	35	163		
MMULP2540	MWG 2.5″ MEMBRANE ULP-2540	30	161		
MMULP4021	MWG 4″ MEMBRANE ULP-4021	30	162		
MMULP4040	MWG 4″ MEMBRANE ULP-4040	30	162		
MMULP4040HR	MWG 4″ MEMBRANE ULP-4040MR	30	162		
MMULP4040MR	MWG 4″ MEMBRANE ULP-4040MR	30	162		
MMULP8040	MWG 8″ MEMBRANE ULP-8040	35	163		
MMULP8040MR	MWG 8″ MEMBRANE ULP-8040MR	35	163		
MMBW4040	MWG 4″ MEMBRANE BW-4040	30	162		
MMBW8040	MWG 8″ MEMBRANE BW-8040	35	163		
MMBW8040FR	MWG 8″ MEMBRANE BW-8040FR	35	163		
MMBW8040HR	MWG 8″ MEMBRANE BW-8040HR	35	163		
MMSW2521	MWG 2.5″ MEMBRANE SW-2521	30	161		
MMSW2540	MWG 2.5″ MEMBRANE SW-2540	30	161		
MMSW4021	MWG 4″ MEMBRANE SW-4021	30	162		
MMSW4040	MWG 4″ MEMBRANE SW-4040	30	162		
MMSW4040HR	MWG 4″ MEMBRANE SW-4040HR	30	162		
MMSW8040HR	MWG 8″ MEMBRANE SW-8040HR	35	163		
MMNF2-2540	MWG 2.5″ MEMBRANE NF2-2540	30	161		
MMNF1-4040R	MWG 4″ MEMBRANE NF2-4040	30	162		
MMNF2-4040	MWG 4″ MEMBRANE NF2-4040	30	162		
MMNF2-8040	MWG 8″ MEMBRANE NF2-8040	35	163		

MWG Membranes

Ref	Mod.	Permeate flow rate GPD (m³/d)	Rejection NaCl (%)	Effective area m2 (ft2)	Spacer (mil)	Test	NSF
MMRO1812-50	TW RO	50 (0,19)	98,0	0,37 (4)	X	1	58
MMRO1812-75	TW RO	75 (0,28)	98,0	0,37 (4)	X	1	58
MMRO2012-100	TW RO	100 (0,38)	98,0	0,56 (6)	X	1	58
MMRO2012-150	TW RO	150 (0,57)	98,0	0,56 (6)	X	1	58
MMRO2812-200	TW RO	200 (0,76)	98,0	0,93 (10)	X	1	58
MMRO3012-300	TW RO	300 (1,14)	98,0	1,3 (14)	X	1	58
MMRO3012-400	TW RO	400 (1,52)	98,0	1,3 (14)	X	1	58
MMNF1812	TW NF	100 (0,38) 100 (0,38)	30-5096,0	0,37 (4)	X	2	X
MMNF2012	TW NF	150 (0,57) 150 (0,57)	30-5096,0	0,56 (6)	X	2	X
MMNF3012	TW NF	350 (1,32) 350 (1,32)	30-5096,0	1,3 (14)	X	2	X
MMXLP2521	XLP	300 (1,13)	99,2	1,3 (14)	X	3	X
MMXLP2540	XLP	600 (2,27)	99,2	2,5 (27)	X	3	X
MMXLP4021	XLP	800 (3,04)	99,2	3,4 (36)	X	3	X
MMXLP4040	XLP	2.400 (9,1)	99,2	7,9 (85)	X	4	X
MMXLP8040HR	XLP	9.000 (34,1)	99,3	35,3 (380)	X	4	X
MMULP2540	LP	750 (2,84)	99,3	2,5 (27)	X	5	X
MMULP4021	LP	950 (3,6)	99,3	3,4 (36)	X	5	61
MMULP4040	LP	2.700 (10,2)	99,4	9,3 (100)	28	5	61
MMULP4040HR	LP	1.800 (6,8)	99,7	7,9 (85)	X	5	61
MMULP4040MR	LP	2.200 (8,3)	99,6	9,3 (100)	28	5	61
MMULP8040	LP	12.000 (45,4)	99,3	39 (420)	X	5	61
MMULP8040MR	LP	10.000 (37,8)	99,6	40,9 (440)	28	5	X
MMBW4040	BW	2.400 (9,1)	99,6	7,9 (85)	X	6	61
MMBW8040	BW	10.500 (39,7)	99,6	37,2 (400)	X	6	61
MMBW8040FR	BW	9.500 (35,9)	99,7	34 (365)	34	6	X
MMBW8040HR	BW	9.500 (35,9)	99,7	35,5 (380)	X	6	X
MMSW2521	SW	300 (1,13)	99,7	1,3 (14)	X	7	X
MMSW2540	SW	600 (2,27)	99,7	2,5 (27)	X	7	X
MMSW4021	SW	800 (3,04)	99,7	3,4 (36)	X	7	X
MMSW4040	SW	1.800 (6,8)	99,7	7,9 (85)	X	7	X
MMSW4040HR	SW	1.500 (5,7)	99,75	7,9 (85)	28	7	X
MMSW8040HR	SW	6.500 (24,6)	99,8	37,2 (400)	28	7	X
MMNF2-2540	NF	800 (3,04) 800 (3,04)	30-50 96,0	2,5 (27)	X	8	X
MMNF1-4040R	NF	1.800 (6,8) 1.800 (6,8)	> 85 99,0	7,9 (85)	X	8	X
MMNF2-4040	NF	2.400 (9,1) 2.400 (9,1)	30-50 96,0	7,9 (85)	X	8	X
MMNF2-8040	NF	12.000 (45,4) 12.000 (45,4)	30-50 96,0	37,2 (400)	X	8	X

Certificates	Manufacturer	Sectors
DM174-2004	**MWG**	Domestic, Commercial, Industrial

MWG Membranes

Test condition	Pressure (psi)	Temperature of solution NaCl (°C)	Concentration of NaCl solution (ppm)	Concentration of MgSO4 solution (ppm)	pH	Recovery rate (%)
1	60	25	250	-	7,5-8,0	15
2	60	25	250	250	7,5-8,0	15
3	100	25	500	-	7,5-8,0	8
4	100	25	500	-	7,5-8,0	15
5	150	25	1500	-	7,5-8,0	15
6	225	25	2000	-	7,5-8,0	15
7	800	25	32000	-	7,5-8,0	8
8	70	25	500	2000	7,5-8,0	15

TW RO: Residential RO - **XLP**: Extra Low Pressure - **BW**: Brackish Water - **NF**: Nano Filtration - **TW NF**: Industrial NF - **LP**: Low Pressure - **SW**: Sea Water

CSM Membranes

Ref	Description	Fam.	Subfam.		
MCRE1812-50	CSM 1.8″ MEMBRANE RE1812-50	30	150		
MCRE1812-60	CSM 1.8″ MEMBRANE RE1812-60	30	150		
MCRE1812-80	CSM 1.8″ MEMBRANE RE1812-80	30	150		
MCRE1812-HR+	CSM 1.8″ MEMBRANE RE1812-HR+	30	150		
MCRE2012-100	CSM 2″ MEMBRANE RE2012-100	30	150		
MCRE2012-150	CSM 2″ MEMBRANE RE2012-150	30	150		
MCRE2012-400	CSM 2″ MEMBRANE RE2012-400	30	150		
MCRE2012-LP	CSM 2″ MEMBRANE RE2012-LP	30	150		
MCRE2012-LPF	CSM 2″ MEMBRANE RE2012-LPF	30	150		
MCRE2812-300	CSM 2.8″ MEMBRANE RE2812-300	30	155		
MCRE3012-500	CSM 3″ MEMBRANE RE3012-500	30	165		
MCRE3512-TK	CSM 3.5″ MEMBRANE RE3512-TK	30	155		
MCNE1812	CSM 1.8″ MEMBRANE NE1812	30	150		
MCRE2514-TL	CSM 2.5″ MEMBRANE RE2514-TL	30	160		
MCRE2514-TLF	CSM 2.5″ MEMBRANE RE2514-TLF	30	160		
MCRE2521-BLN	CSM 2.5″ MEMBRANE RE2521-BLN	30	160		
MCRE2521-BLF	CSM 2.5″ MEMBRANE RE2521-BLF	30	160		
MCRE2540-BLN	CSM 2.5″ MEMBRANE RE2540-BLN	30	160		
MCRE2540-BLF	CSM 2.5″ MEMBRANE RE2540-BLF	30	160		
MCRE2540-BLR	CSM 2.5″ MEMBRANE RE2540-BLR	30	160		
MCRE4021-BLN	CSM 4″ MEMBRANE RE4021-BLN	30	165		
MCRE4021-BLF	CSM 4″ MEMBRANE RE4021-BLF	30	165		
MCRE4040-BLN	CSM 4″ MEMBRANE RE4040-BLN	30	165		
MCRE4040-BLF	CSM 4″ MEMBRANE RE4040-BLF	30	165		

CSM Membranes

Ref	Mod.	Permeate flow rate GPD (m³/d)	Rejection NaCl (%)	Effective area m2 (ft2)	Spacer (mil)	Test	NSF
MCRE1812-50	TW RO	50 (0,19)	98		X	6	58
MCRE1812-60	TW RO	60 (0,22)	98		X	6	58
MCRE1812-80	TW RO	80 (0,30)	98		X	6	58
MCRE1812-HR+	TW RO	80 (0,30)	99		X	6	58
MCRE2012-100	TW RO	100 (0,38)	98		X	6	58
MCRE2012-150	TW RO	150 (0,57)	98	0,59 (6,4)	X	6	58
MCRE2012-400	TW RO	400 (1,52)	96		X	6	58
MCRE2012-LP	TW RO	50 (0,19)	93		X	7	58
MCRE2012-LPF	TW RO	60. (0,22)	93		X	7	58
MCRE2812-300	TW RO	300 (1,14)	96		X	10	58
MCRE3012-500	TW RO	500 (1,90)	97		X	10	x
MCRE3512-TK	TW RO	600 (2,27)	95		X	9	58
MCNE1812	TW NF	80 (0,30)	40-60		X	8	x
MCRE2514-TL	LP	280 (1,06)	99,0	0,7 (7)	X	2	X
MCRE2514-TLF	LP	320 (1,20)	99,0	0,7 (7)	X	3	X
MCRE2521-BLN	LP	400 (1,50)	99,2	1,1 (12)	X	2	X
MCRE2521-BLF	LP	400 (1,50)	99,0	1,1 (12)	X	3	X
MCRE2540-BLN	LP	930 (3,50)	99,2	2,5 (27)	X	2	x
MCRE2540-BLF	LP	800 (3,04)	99,2	2,5 (27)	X	3	x
MCRE2540-BLR	LP	740 (2,80)	99,6	2,5 (27)	X	2	x
MCRE4021-BLN	LP	1200 (4,50)	99,2	3,3 (35)	X	2	x
MCRE4021-BLF	LP	1050 (3,88)	99,2	3,3 (35)	X	3	61
MCRE4040-BLN	LP	2600 (9,62)	99,2	7,9 (85)	X	2	61
MCRE4040-BLF	LP	2500 (9,25)	99,2	7,9 (85)	X	3	61

CSM Membranes

Ref	Description	Fam.	Subfam.		
MCRE4040-BLR	CSM 4″ MEMBRANE RE4040-BLR	30	165		
MCRE8040-BLN	CSM 8″ MEMBRANE RE8040-BLN	35	190		
MCRE8040-BLN440	CSM 8″ MEMBRANE RE8040-BLN440	35	190		
MCRE8040-BLR	CSM 8″ MEMBRANE RE8040-BLR	35	190		
MCRE8040-BLR440	CSM 8″ MEMBRANE RE8040-BLR440	35	190		
MCRE8040-BLF	CSM 8″MEMBRANE RE8040-BLF	35	190		
MCRE8040-BLF440	CSM 8″ MEMBRANE RE8040-BLF440	35	190		
MCRE2521-BE	CSM 2.5″ MEMBRANE RE2521-BE	30	160		
MCRE2540-BE	CSM 2.5″ MEMBRANE RE2540-BE	30	160		
MCRE4021-BE	CSM 4″ MEMBRANE RE4021-BE	30	165		
MCRE4040-BE	CSM 4″ MEMBRANE RE4040-BE	30	165		
MCRE8040-BN	CSM 8″ MEMBRANE RE8040-BN	35	190		
MCRE8040-BE	CSM 8″ MEMBRANE RE8040-BE	35	190		
MCRE8040-BE440	CSM 8″ MEMBRANE RE8040-BE440	35	190		
MCRE8040-BR	CSM 8″ MEMBRANE RE8040-BR	35	190		
MCRE2540-FEn	CSM 2.5″ MEMBRANE RE2540-FEn	30	160		
MCRE4040-FEn	CSM 4″ MEMBRANE RE4040-Fen	30	165		
MCRE4040-FLR	CSM 4″ MEMBRANE RE4040-FLR	30	165		
MCRE8040-FEn34	CSM 8″ MEMBRANE RE8040-FEn34	35	190		
MCRE8040-FEn	CSM 8″ MEMBRANE RE8040-FEn	35	190		
MCRE8040-FLR34	CSM 8″ MEMBRANE RE8040-FLR	35	190		

CSM Membranes

Ref	Mod.	Permeate flow rate GPD (m³/d)	Rejection NaCl (%)	Effective area m2 (ft2)	Spacer (mil)	Test	NSF
MCRE4040-BLR	LP	2100 (7,70)	99,6	7,9 (85)	X	2	61
MCRE8040-BLN	LP	12000 (45,4)	99,5	45,4 (400)	x	2	61
MCRE8040-BLN440	LP	13000 (48,1)	99,5	40,9 (440)	x	2	61
MCRE8040-BLR	LP	10000 (37,9)	99,6	37,2 (400)	x	2	61
MCRE8040-BLR440	LP	11000 (41,6)	99,6	40,9 (440)	x	2	61
MCRE8040-BLF	LP	11500 (42,6)	99,2	37,2 (400)	x	3	61
MCRE8040-BLF440	LP	12650 (46,8)	99,2	40,9 (440)	x	3	61
MCRE2521-BE	BW	400 (1,52)	99,5	1,1 (12)	x	1	x
MCRE2540-BE	BW	1000 (3,80)	99,5	2,5 (27)	x	1	x
MCRE4021-BE	BW	1200 (3,80)	99,5	3,3 (35)	x	1	x
MCRE4040-BE	BW	2400 (8,88)	99,7	7,9 (85)	x	1	61
MCRE8040-BN	BW	9500 (35,1)	99,7	33,9 (365)	x	1	61
MCRE8040-BE	BW	11000 (40,7)	99,7	37,2 (400)	x	1	61
MCRE8040-BE440	BW	12000 (44,4)	99,7	40,9 (440)	x	1	61
MCRE8040-BR	BW	6000 (22,2)	99,75	35,3 (380)	x	1	x
MCRE2540-FEn	FR	1000 (3,80)	99,5	2,5 (27)	x	1	x
MCRE4040-FEn	FR	2400 (8,88)	99,7	7,9 (85)	x	1	x
MCRE4040-FLR	FR	2100 (7,90)	99,6	7,9 (85)	x	1	x
MCRE8040-FEn34	FR	11000 (40,7)	99,7	37,2 (400)	34	1	61
MCRE8040-FEn	FR	11000 (40,7)	99,7	37,2 (400)	32	1	61
MCRE8040-FLR34	FR	10000 (37,0)	99,6	37,2 (400)	34	2	61

CSM Membranes

Ref	Description	Fam.	Subfam.		
MCRE2521-SHF	CSM 2.5″ MEMBRANE RE2521-SHF	30	160		
MCRE2540-SHF	CSM 2.5″ MEMBRANE RE2540-SHF	30	160		
MCNE2540-90	CSM 2.5″ MEMBRANE NE2540-90	30	160		
MCNE4040-90	CSM 4″ MEMBRANE NE4040-90	30	165		
MCNE8040-90	CSM 8″ MEMBRANE NE8040-90	35	190		

Ref	Mod.	Permeate flow rate GPD (m^3/d)	Rejection NaCl (%)	Effective area m2 (ft2)	Spacer (mil)	Test	NSF
MCRE2521-SHF	SW	270 (0,99)	99,70	1,1 (12)	x	4	x
MCRE2540-SHF	SW	560 (2,10)	99,70	2,2 (24)	x	4	x
MCNE2540-90	NF	500 (1,90)	85-95	2,5 (27)	x	5	x
MCNE4040-90	NF	1700 (6,30)	85-97 90-97	7,9 (85)	x	5	61
MCNE8040-90	NF	8000 (29,6)	85-97 90-97	37,2 (400)	x	5	61

Test condition	Pressure (psi)	Temperature of solution NaCl (°C)	Concentration of NaCl solution (ppm)	Concentration of MgSO4 solution (ppm)	pH	Recovery rate (%)
1	225	25	2000	-	6,5-7,0	8 ± 15%
2	150	25	1500	-	6,5-7,0	8 ± 15%
3	100	25	500	-	6,5-7,0	8 ± 15%
4	800	25	32000	-	6,5-7,0	4 ± 8%
5	75	25	2000	500	6,5-7,0	15%
6	60	25	200	-	6,5-7,0	15%
7	20	25	100	-	6,5-7,0	15%
8	60	25	250	-	6,5-7,0	15%
9	60	25	200	-	6,5-7,0	30%
10	80	25	200	-	6,5-7,0	40%
11	150	25	2000	-	6,5-7,0	15%

TW RO: Residential RO - **LP**: Low Pressure - **BW**: Brackish Water - **SW:** Sea Water - **TW NF**: Industrial NF - **FR**: Fouling Resistant - **CR:** Chlorine Resistant - **NF**: Nano Filtration **Produttore:** CSM

Certificates	Manufacturer	Sectors
DM174-2004	CSM	Domestic, Commercial, Industrial

CSM Membranes Brine Seal and Interconnector

- Each membrane element supplied with one brine seal and one interconnector (excepted for 2,5” membrane element, supplied without interconnector).

Ref	Description	Fam.	Subfam.		
DC005	EPDM BRINE SEAL 2.5″ CSM	30	160		
DD003	EPDM BRINE SEAL 4″ CSM	30	165		
EA798	EPDM BRINE SEAL 8″ CSM	35	190		

Ref	Description	Material	For Membranes
DC005	EPDM BRINE SEAL 2.5″ CSM	EPDM	2,5"
DD003	EPDM BRINE SEAL 4″ CSM	EPDM	4"
EA798	EPDM BRINE SEAL 8″ CSM	EPDM	8"

Certificates	Manufacturer	Sectors
DM174-2004		Domestic, Industrial

Ref	Description	Fam.	Subfam.		
DD004	ABS FEMALE INTERCONNECTOR CSM 2.5″ & 4″ WITH O-RING - WHITE COLOR	30	165		
EA799	ABS MALE INTERCONNECTOR 1.125″ CSM WITH O-RING -BW TYPE BLACK COLOR	35	190		

Ref	Material	Color	For Membranes
DD004	ABS	White	2,5" - 4"
EA799	ABS	Black	8"

Certificates	Manufacturer	Sectors
DM174-2004		Domestic, Industrial

Vontron Membranes

Ref	Description	Fam.	Subfam.		
MVULP1812-50	VONTRON 1.8″ MEMBRANE ULP1812-50	30	152		
MVULP1812-75	VONTRON 1.8″ MEMBRANE ULP1812-75	30	152		
MVULP2012-100	VONTRON 2″ MEMBRANE ULP2012-100	30	152		
MVULP2812	VONTRON 2.8″ MEMBRANE ULP2812	30	157		
MVULP3012	VONTRON 3″ MEMBRANE ULP3012-300	30	157		
MVXLP11-4040	VONTRON 4″ MEMBRANE XLP11-4040	30	166		
MVULP21-2540	VONTRON 2.5″ MEMBRANE ULP21-2540	30	159		
MVULP21-4021	VONTRON 4″ MEMBRANE ULP21-4021	30	166		
MVULP21-4040	VONTRON 4″ MEMBRANE ULP21-4040	30	166		
MVULP31-4040	VONTRON 4″ MEMBRANE ULP31-4040	30	166		
MVULP22-8040	VONTRON 8″ MEMBRANE ULP22-8040	35	167		
MVULP32-8040	VONTRON 8″ MEMBRANE ULP32-8040	35	167		
MVULP440	VONTRON 8″ MEMBRANE ULP440	35	167		
MVLP100	VONTRON 4″ MEMBRANE LP100	30	166		
MVLP21-4040	VONTRON 4″ MEMBRANE LP21-4040	30	166		
MVLP21-8040	VONTRON 8″ MEMBRANE LP21-8040	35	167		
MVLP22-8040	VONTRON 8″ MEMBRANE LP22-8040	35	167		
MVPURO-LE	VONTRON 8″ MEMBRANE PURO-LE	35	167		
MVSW11-2521	VONTRON 2.5″ MEMBRANE SW11-2521	30	159		
MVSW11-4021	VONTRON 4″ MEMBRANE SW11-4021	30	166		
MVSW4040HR	VONTRON 4″ MEMBRANE SW4040HR	30	166		
MVSW4040LE	VONTRON 4″ MEMBRANE SW4040LE	30	166		

Vontron Membranes

Ref	Mod.	Permeate flow rate GPD (m³/d)	Rejection NaCl rate (%)	Effective area m2 (ft2)	Spacer (mil)	Test	NSF
MVULP1812-50	TW RO	50 (0,19)	97,5	X X	X	1	58
MVULP1812-75	TW RO	75 (0,28)	97,5	X X	X	1	58
MVULP2012-100	TW RO	100 (0,38)	94,0	X X	X	1	58
MVULP2812	TW RO	200 (0,76)	97,0	X X	X	3	58
MVULP3012	TW RO	300 (1,14)	97,0	X X	X	3	58
MVXLP11-4040	XLP RO	2.000 (7,6)	98,0	8,4 (90)	X	3	61
MVULP21-2540	LP	750 (2,84)	99,0	2,8 (30)	X	4	61
MVULP21-4021	LP	950 (3,6)	99,0	3,3 (36)	X	4	61
MVULP21-4040	LP	2.400 (9,1)	99,0	8,4 (90)	X	5	61
MVULP31-4040	LP	1.900 (7,2)	99,4	8,4 (90)	X	5	61
MVULP22-8040	LP	12.100 (45,7)	99,0	37,2 (400)	X	5	61
MVULP32-8040	LP	10.500 (39,7)	99,5	37,2 (400)	X	5	61
MVULP440	LP	12.000 (45,4)	99,5	40,9 (440)	X	6	61
MVLP100	LP	2.500 (9,5)	99,7	9,3 (100)	X	7	61
MVLP21-4040	LP	2.400 (9,1)	99,5	8,4 (90)	X	7	61
MVLP21-8040	LP	9.600 (36,3)	99,5	33,9 (365)	X	7	61
MVLP22-8040	LP	10.500 (39,7)	99,5	37,2 (400)	X	7	61
MVPURO-LE	FR	10.000 (37,8)	99,6	37,2 (400)	34	8	61
MVSW11-2521	SW	270 (1,0)	99,5	1,1 (12)	x	9	61
MVSW11-4021	SW	750 (2,8)	99,5	3,1 (33)	x	9	61
MVSW4040HR	SW	1.600 (6,1)	99,8	8,4 (90)	x	10	61
MVSW4040LE	SW	1.900 (7,2)	99,7	8,4 (90)	x	10	61

Vontron Membranes

Test Condition	Pressure (psi)	Temperature of solution NaCl (°C)	Concentration of NaCl Solution (ppm)	Concentration of MgSO4 solution (ppm)	pH	Recovery rate (%)
1	60	25	250	-	6,5-8,5	15
2	60	25	250	CaCl2 250	6,5-8,5	15
3	100	25	500	-	7,5	15
4	150	25	1500	-	7,5	8
5	150	25	1500	-	7,5	15
6	150	25	500	-	7,5	15
7	225	25	2000	-	7,5	15
8	150	25	2000	-	7,5	15
9	800	25	32000	-	7,5	4
10	800	25	32000	-	7,5	8
11	100	25	2000	MgSO4 2000	7,5	15

TW RO: Residential RO - **XLP RO**: Extra Low Pressure - **BW**: Brackish Water - **SW**: Sea Water - **TW NF**: Industrial NF - **LP**: Low Pressure - **FR**: Sea Water - **NF**: Nano Filtration

Certificates	Manufacturer	Sectors
DM174-2004	Vontron	Domestic, Commercial, Industrial

Antiscaling for R. O. Membranes Permascale Eut 110

- PERMASCALE EUT110 is a product that prevents scales and iron sediment on R.O. membranes systems;
- For industrial systems and for potable water treatment systems;
- Very effective on various kinds of water, minimize the fouling and reduce the frequency of membranes cleaning;
- Particularly suitable for big plants with permeate flows higher than 100 m3/day;
- Compatible with all kinds of membranes;
- Replace totally or partially the acidification;
- Easy to use due to the liquid form.

Use

- Injection by dosing pump of pure or diluted product.
- The dosage is according to the concentration of scaling salts and iron, and can vary from 2 to 10 cm3/m3 of feed water

Instructions and Packaging

- Handling: following safety data sheet. Take the normal precautions to handle chemical products.
- Packaging: 20 kg drum.
- Storage: closed on the original packaging, sheltered from cold and heat.

Characteristics:	
Formulation	special phosphonated
pH	7,8 ± 0,5
Appearance	light yellow liquid
Density a 20°C	1,30 ± 0,05 g/ml
Checking	phosphonated value
Solubility in water	complete

Ref	Description	Fam.	Subfam.		
EA100	MWG PERMASCALE EUT 110 - DRUM 20 KG	35	191		

Certificates	Manufacturer	Sectors
	MWG	Commercial, Industrial

Antiscaling for R.O. Membranes Permascale EUT 120

- PERMASCALE EUT120 is a product that prevents scales and iron sediment on R.O. membranes systems;
- Very effective on various kinds of water, minimize the fouling and reduce the frequency of membranes cleaning;
- Particularly suitable for plants with permeate flows lower than 100 m3/day;
- Compatible with all kinds of membranes;
- Replace totally or partially the acidification;
- Easy to use due to the liquid form.

Use

- Injection by dosing pump of pure or diluted product:
- The dosage is according to the concentration of scaling salts and iron, and can vary from 3 to 13 cm3/m3 of feed water.

Instructions and packaging

- Handling: following safety data sheet. Take the normal precautions to handle chemical products.
- Packaging: 20 kg drum.
- Storage: closed on the original packaging, sheltered from cold and heat.

Characteristics	
Formulation	special phosphonated
pH	7,5 ± 0,5
Appearance	light yellow liquid
Density a 20°C	1,30 ± 0,02 g/ml
Checking	phosphonated value
Solubility in water	complete

Ref	Description	Fam.	Subfam.		
EA101	MWG PERMASCALE EUT 120 - DRUM 20 KG	35	191		

Box: WxLxH	Box: Q.ty	Box: Weight	Pallet: WxLxH	Pallet: Q.ty	Pallet: Weight

Certificates	Manufacturer	Sectors
	MWG	Commercial, Industrial

EUROTROL®
WATER TREATMENT COMPONENTS

Vessels and accessories, rotary pumps MWG

Back to index

Vessel for Residential Elements

1,8”- 2”

- material PP white; connections ⅛” NPT F; max pressure 125 psi (8,6 bar);
- double o-ring; permeate tube seat diameter = 0,67”; nominal dimension 1812 - 2012.

Membranes coupling: CSM 1,8” - 2” residential membranes,

Ref	Description	Fam.	Subfam.		
DE010	MEMBRANE VESSEL 1812 IN P.P.	30	175		

Box: WxLxH	Box: Q.ty	Box: Weight	Pallet: WxLxH	Pallet: Q.ty	Pallet: Weight

Certificates	Manufacturer	Sectors
DM174-2004		Domestic

Single mounting clips for vessel residential 1,8” - 2” membranes

- material PP; white colour.

Ref	Description	Fam.	Subfam.		
DE034	MWG SINGLE CLIP 2.5″	30	175		

Certificates	Manufacturer	Sectors
	MWG	Domestic

2,8” - 3”

- material PP white; connections: feed, permeate and concentrate ⅜” NPT F (please, use our fittings ref. AV153 or elbows ref. AV159);
- max pressure 125 psi (8,6 bar); permeate tube seat diameter = 0,67”; nominal dimension 2812 - 3012.

Membranes coupling: CSM 2,8” residential membranes.

Ref	Description	Fam.	Subfam.		
DE007	MEMBRANE VESSEL 3012 IN P.P.	30	175		

Box: WxLxH	Box: Q.ty	Box: Weight	Pallet: WxLxH	Pallet: Q.ty	Pallet: Weight

Certificates	Manufacturer	Sectors
DM174-2004		Domestic

Single mounting clips for vessel residential 3” membranes

- material PP; white colour.

Ref	Description	Fam.	Subfam.		
DE006	MWG SINGLE CLIP 3″	30	175		

Certificates	Manufacturer	Sectors
	MWG	Domestic

2 ½” Membrane Vessels End Port Series 300 E-2.5

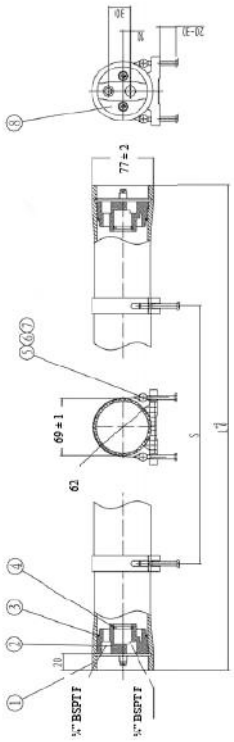

- Fiberglass reinforced plastic pressure vessels series 300 E-2.5, D.75” direct connection, white painted, UVA-ray proof material;
- End-cap in ABS;
- Max operating pressure 300 psi (21 bar);
- European 2014/68/EU Directive compliant for pressure equipment (PED);
- Built in accordance with ASME code section X;
- Each vessel is factory tested at 1,5 times max operating pressure;
- Connections: feed/concentrate ¼” BSPT F, permeate ¼” BSPT F;
- Operating pH Range: 3 ÷ 11 Cleaning pH Range: 2 ÷ 12 (less than 30 minutes);
- Straps and saddles included.

Ref	Description	Fam.	Subfam.		
H2E1BQ	MWG RO VESSEL FRP 2,5″ END-PORT 300 PSI 2514 1/4″ BSPT F - 1/4″ BSPT F	30	180		
H2E1BV	MWG RO VESSEL FRP 2,5″ END-PORT 300 PSI 2521 1/4″ BSPT F - 1/4″ BSPT F	30	180		
H2E1B1	MWG RO VESSEL FRP 2,5″ END-PORT 300 PSI 2540 1/4″ BSPT F - 1/4″ BSPT F	30	180		

Ref	Elements	L (mm)	S (mm)
H2E1BQ	1 x 14"	427	200
H2E1BV	1 x 21"	605	400
H2E1B1	1 x 40"	1088	700

Ref	Box: WxLxH.	Box: Qnt.	Box: Weight.	Pallet: WxLxH.	Pallet: Qnt.	Pallet: Weight.
H2E1BQ						
H2E1BV						
H2E1B1						

Certificates	Manufacturer	Sectors
DM174-2004 CE	**MWG**	Commercial

Spare parts

Ref	Description	Fam.	Subfam.		
H2R011	MWG 2,5″ MPV END PLATE IN ABS F/C/P 1/4″ BSPT FOR 300 PSI	30	180		
H2R103	MWG 2,5″ MPV HEAD SEAL IN EPDM FOR 300÷1000 PSI	30	180		
H2R101	MWG 2,5″ & 4″ MPV ADAPTER SEAL IN EPDM FOR 300÷1200 PSI	30	180		
H2R001	MWG 2.5″ MPV SADDLE FOR 300-1000 PSI	30	180		
H2R003	MWG 2.5″ MPV STRAP FOR 300 PSI L=160 MM	30	180		
H2R041	MWG 2,5″ MPV SEEGER IN AISI 316 FOR 300-1000 PSI	30	180		

Spare parts

Item	Ref	Q.ty for each MPV	Material	Note
2 + 4	H2R011	2	ABS	
3	H2R103	2	EPDM	56 x 3,55
4	H2R101	2	EPDM	19 x 2,65
5	H2R001	2	Rubber	
7 + 6	H2R003	2	AISI 304 - Rubber	
8	H2R041	4	AISI 304	

2 ½” Membrane Vessels End Port Series 1000 E-2.5

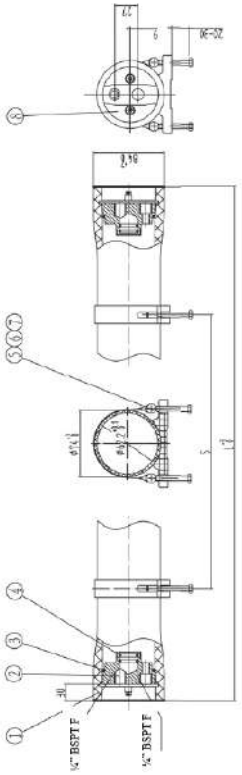

- Fiberglass reinforced plastic pressure vessels series 1000 E-2.5, D.75” direct connection, white painted, UVA-ray proof material;
- End-cap in super duplex steel AISI 2507;
- Max operating pressure 1000 psi (69 bar);
- European 2014/68/EU Directive compliant for pressure equipment (PED);
- Built in accordance with ASME code section X;
- Eeach vessel is factory tested at 1,5 times max operating pressure;
- Connections: feed/concentrate ¼” BSPT F, permeate ¼” BSPT F;
- Operating pH Range: 3 ÷ 11 Cleaning pH Range: 2 ÷ 12 (less than 30 minutes);
- Straps and saddles included.

Ref	Description	Fam.	Subfam.		
H2E1GV	MWG RO VESSEL FRP 2,5″ END-PORT 1000 PSI 2521 1/4″ BSPT F - 1/4″ BSPT F	30	180		
H2E1G1	MWG RO VESSEL FRP 2,5″ END-PORT 1000 PSI 2540 1/4″ BSPT F - 1/4″ BSPT F	30	180		

Ref	Elements	L (mm)	S (mm)
H2E1GV	1 x 21"	629	400
H2E1G1	1 x 40"	1112	700

Ref	Box: WxLxH.	Box: Qnt.	Box: Weight.	Pallet: WxLxH.	Pallet: Qnt.	Pallet: Weight.
H2E1GV						
H2E1G1						

Certificates	Manufacturer	Sectors
DM174-2004 CE	**MWG**	Commercial

Spare parts

Ref	Description	Fam.	Subfam.		
H2R013	MWG 2,5″ MPV END PLATE IN AISI 2507SST F/C/P 1/4″ BSPT FOR 1000 PSI	30	180		
H2R103	MWG 2,5″ MPV HEAD SEAL IN EPDM FOR 300÷1000 PSI	30	180		
H2R101	MWG 2,5″ & 4″ MPV ADAPTER SEAL IN EPDM FOR 300÷1200 PSI	30	180		
H2R001	MWG 2.5″ MPV SADDLE FOR 300-1000 PSI	30	180		
H2R041	MWG 2,5″ MPV SEEGER IN AISI 316 FOR 300-1000 PSI	30	180		

Spare parts

Item	Ref	Q.ty for each MPV	Material	Note
2 + 4	H2R013	2	Super Duplex Steel AISI 2507	
3	H2R103	2	EPDM	56 x 3,55
4	H2R101	4	EPDM	19 x 2,65
5	H2R001	2	Rubber	
8	H2R041	4	AISI 304	

4” Membrane Vessels End Port Series 300 E-4

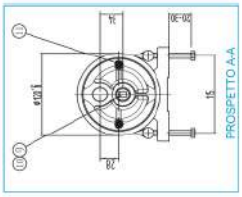

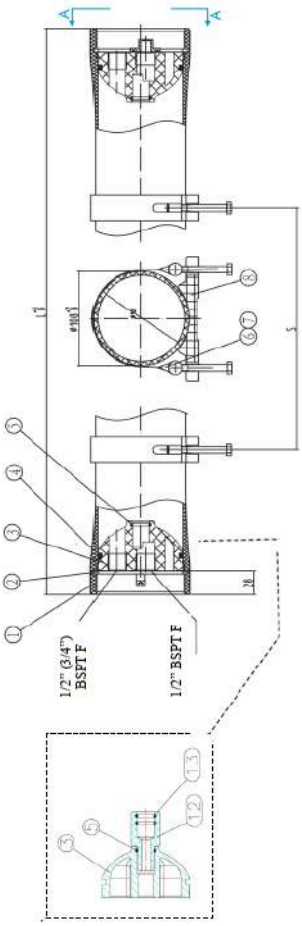

- Fiberglass reinforced plastic pressure vessels series 300 E-4, D.75” direct connection, white painted, UVA-ray proof material;
- End-cap in ABS;
- Max operating pressure 300 psi (21 bar);
- European 2014/68/EU Directive compliant for pressure equipment (PED);
- Built in accordance with ASME code section X;
- Each vessel is factory tested at 1,5 times max operating pressure;
- Permeate connections ½” BSPT F;
- Operating pH Range: 3 ÷ 11 Cleaning pH Range: 2 ÷ 12 (less than 30 minutes);
- Straps and saddles included (n.2 pcs).

Ref	Description	Fam.	Subfam.		
H4E2BV	MWG RO VESSEL FRP 4″ END-PORT 300 PSI 4021 1/2″ BSPT F - 1/2″ BSPT F	30	180		
H4E3BV	MWG RO VESSEL FRP 4″ END-PORT 300 PSI 4021 3/4″ BSPT F - 1/2″ BSPT F	30	180		
H4E2B1	MWG RO VESSEL FRP 4″ END-PORT 300 PSI 4040 1/2″ BSPT F - 1/2″ BSPT F	30	180		
H4E3B1	MWG RO VESSEL FRP 4″ END-PORT 300 PSI 4040 3/4″ BSPT F - 1/2″ BSPT F	30	180		
H4E2B2	MWG RO VESSEL FRP 4″ END-PORT 300 PSI 2EL 1/2″ BSPT F - 1/2″ BSPT F	30	180		
H4E3B2	MWG RO VESSEL FRP 4″ END-PORT 300 PSI 2EL 3/4″ BSPT F - 1/2″ BSPT F	30	180		
H4E2B3	MWG RO VESSEL FRP 4″ END-PORT 300 PSI 3EL 1/2″ BSPT F - 1/2″ BSPT F	30	180		
H4E3B3	MWG RO VESSEL FRP 4″ END-PORT 300 PSI 3EL 3/4″ BSPT F - 1/2″ BSPT F	30	180		

Ref	Elements	L (mm)	S (mm)
H4E2BV	1 x 21"	658	400
H4E3BV	1 x 21"	658	400
H4E2B1	1 x 40"	1140	600
H4E3B1	1 x 40"	1140	600
H4E2B2	2 x 40"	2156	1200
H4E3B2	2 x 40"	2156	1200
H4E2B3	3 x 40"	3172	2200
H4E3B3	3 x 40"	3172	2200

Certificates	Manufacturer	Sectors
DM174-2004 CE	**MWG**	Industrial

4” Membrane Vessels End Port Series 450 E-4

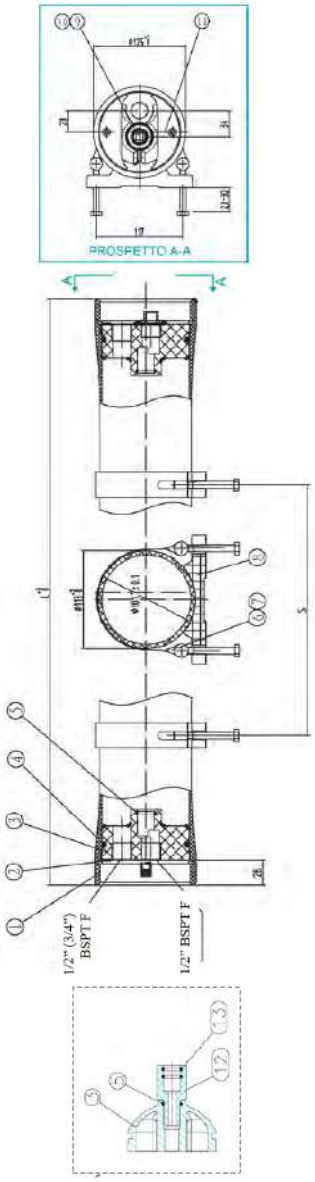

- Fiberglass reinforced plastic pressure vessels series 450 E-4, D.75” direct connection, white painted, UVA-ray proof material;
- End-cap in ABS;
- Max operating pressure 450 psi (31 bar);
- European 2014/68/EU Directive compliant for pressure equipment (PED);
- Built in accordance with ASME code section X;
- Each vessel is factory tested at 1,5 times max operating pressure;
- Permeate connections ½” BSPT F;
- Operating pH Range: 3 ÷ 11 Cleaning pH Range: 2 ÷ 12 (less than 30 minutes);
- Straps and saddles included (n.2 pcs).

Ref	Description	Fam.	Subfam.		
H4E2C1	MWG RO VESSEL FRP 4″ END-PORT 450 PSI 4040 1/2″ BSPT F - 1/2″ BSPT F	30	180		
H4E3C1	MWG RO VESSEL FRP 4″ END-PORT 450 PSI 4040 3/4″ BSPT F - 1/2″ BSPT F	30	180		
H4E2C2	MWG RO VESSEL FRP 4″ END-PORT 450 PSI 2EL 1/2″ BSPT F - 1/2″ BSPT F	30	180		
H4E3C2	MWG RO VESSEL FRP 4″ END-PORT 450 PSI 2EL 3/4″ BSPT F - 1/2″ BSPT F	30	180		
H4E2C3	MWG RO VESSEL FRP 4″ END-PORT 450 PSI 3EL 1/2″ BSPT F - 1/2″ BSPT F	30	180		
H4E3C3	MWG RO VESSEL FRP 4″ END-PORT 450 PSI 3EL 3/4″ BSPT F - 1/2″ BSPT F	30	180		

Ref	Elements	L (mm)	S (mm)
H4E2C1	1 x 40"	1152	600
H4E3C1	1 x 40"	1152	600
H4E2C2	2 x 40"	2168	1200
H4E3C2	2 x 40"	2168	1200
H4E2C3	3 x 40"	3184	2200
H4E3C3	3 x 40"	3184	2200

Certificates	Manufacturer	Sectors
DM174-2004 CE	**MWG**	Industrial

4” End Port Serie 300/450 PSI Vessels Spare Parts

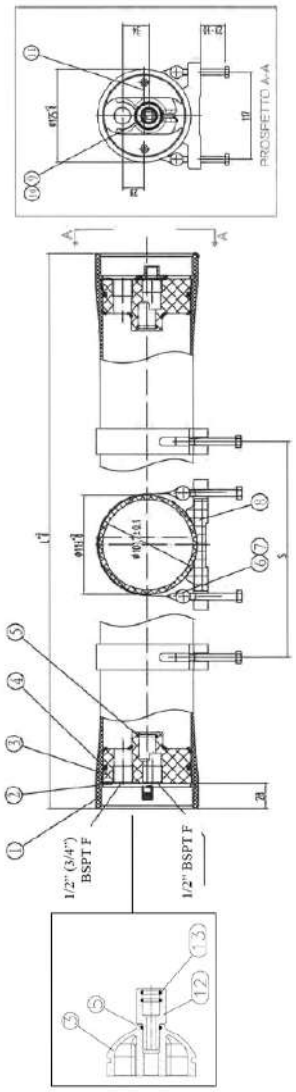

Spare parts

Ref	Description	Fam.	Subfam.		
H4R041	MWG 4″ MPV SEEGER IN AISI 304 FOR 300-450 PSI	30	180		
H4R401	MWG 4″ MPV END PLATE ABS- PP 1/2″ BSPT + FCP 1/2″ BSPT END PORT 300-450PSI	30	180		
H4R403	MWG 4″ MPV END PLATE ABS- PP 1/2″ BSPT + FCP 3/4″ BSPT END PORT 300-450PSI	30	180		
H4R107	MWG 4″ MPV HEAD SEAL IN EPDM FOR 300÷1200 PSI	30	180		
H2R101	MWG 2,5″ & 4″ MPV ADAPTER SEAL IN EPDM FOR 300÷1200 PSI	30	180		
H4R003	MWG 4″ MPV STRAP FOR 300-450 PSI L=265 MM	30	180		
H4R001	MWG 4″ MPV SADDLE FOR 300-1200 PSI	30	180		
H4R081	MWG 4″ MPV PLUG IN ABS FOR 300-450 PSI	30	180		
H4R101	MWG 4″ MPV O-RING IN EPDM OF PLUG 300-450 PSI	30	180		
H4R209	MWG 4″ MPV SEEGER SCREW M6x14 IN AISI 304	30	180		
H4R601	MWG 4″ MPV ADAPTER IN ABS FOR END/SIDE P 300-450 PSI + 600-1000-1200 END P	30	180		
H2R101	MWG 2,5″ & 4″ MPV ADAPTER SEAL IN EPDM FOR 300÷1200 PSI	30	180		

Item	Ref	Q.ty for each MPV	Material	Note
2	H4R041	4	AISI 304	
3 + 5	H4R401	2	ABS	½" ½"
3 + 5	H4R403	2	ABS	¾" ½"
4	H4R107	2	EPDM	90 x 5,3
5	H2R101	2	EPDM	19 x 2,65
6 + 7	H4R003	2-3	AISI 304 - Rubber	
8	H4R001	2-3	Rubber	
9	H4R081	1	ABS	
10	H4R101	1	EPDM	23,6 x 3,55
11	H4R209	4	AISI 304	M6 x 14
12 + 13	H4R601	2	ABS	
13	H2R101	4	EPDM	19 x 2,65

4” Membrane Vessels End Port Series 1000 E-4

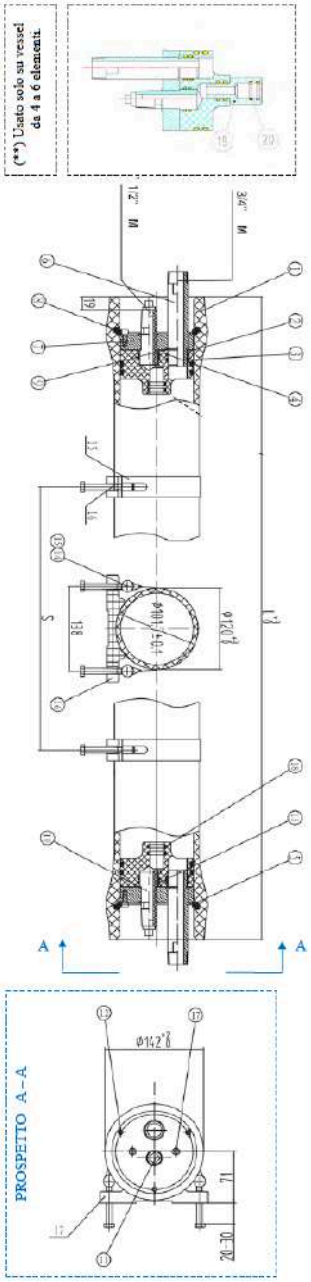

- Fiberglass reinforced plastic pressure vessels series 1000 E-4, complete with 0,75” adapters, white painted, UVA-ray proof material;
- Max operating pressure 1000 psi (69 bar);
- European 2014/68/EU Directive compliant for pressure equipment (PED);
- Built in accordance with ASME code section X;
- Each vessel is factory tested at 1,5 times max operating pressure;
- Feed/concentrate connections ¾” BSPT M, in super duplex steel AISI 2507;
- Permeate connections ½” BSPT M;
- Operating pH Range: 3 ÷ 11 Cleaning pH Range: 2 ÷ 12 (less than 30 minutes);
- Straps and saddles included (n.2 pcs).

Ref	Description	Fam.	Subfam.		
H4E4G1	MWG RO VESSEL FRP 4″ END-PORT 1000 PSI 4040 3/4″ BSPT M - 1/2″ BSPT M	30	180		
H4E4G2	MWG RO VESSEL FRP 4″ END-PORT 1000 PSI 2EL 3/4″ BSPT M - 1/2″ BSPT M	30	180		

Ref	Elements	L (mm)	S (mm)
H4E4G1	1 x 40"	1244	600
H4E4G2	2 x 40"	2260	1200

Ref	Box: WxLxH.	Box: Qnt.	Box: Weight.	Pallet: WxLxH.	Pallet: Qnt.	Pallet: Weight.
H4E4G1						
H4E4G2						

Certificates	Manufacturer	Sectors
DM174-2004 CE	**MWG**	Industrial

4” Membrane Vessels End Port Series 1200 E-4

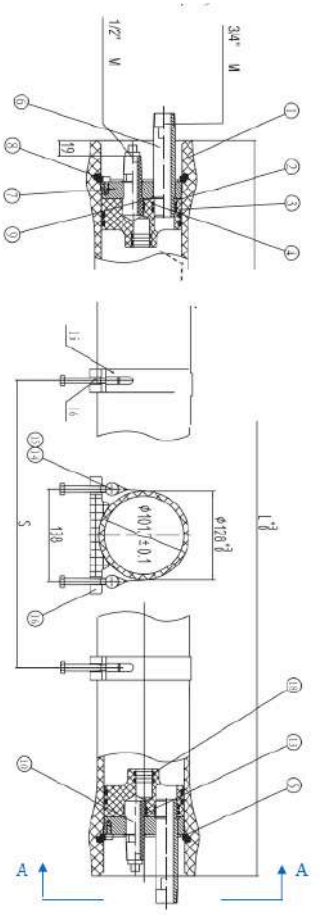

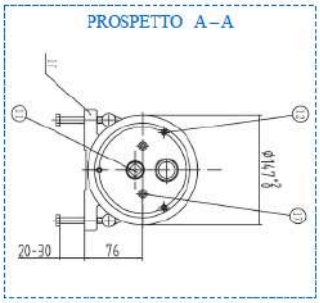

- Fiberglass reinforced plastic pressure vessels series 1200 E-4, complete with 0,75” adapters, white painted, UVA-ray proof material;
- Max operating pressure 1200 psi (83 bar);
- European 2014/68/EU Directive compliant for pressure equipment (PED);
- Built in accordance with ASME code section X;
- Each vessel is factory tested at 1,5 times max operating pressure;
- Feed/concentrate connections ¾” BSPT M, in super duplex steel AISI 2507;
- Permeate connections ½” BSPT M;
- Operating pH Range: 3 ÷ 11 Cleaning pH Range: 2 ÷ 12 (less than 30 minutes);
- Straps and saddles included (n.2 pcs).

Ref	Description	Fam.	Subfam.		
H4E4H1	MWG RO VESSEL FRP 4″ END-PORT 1200 PSI 4040 3/4″ BSPT M - 1/2″ BSPT M	30	180		
H4E4H2	MWG RO VESSEL FRP 4″ END-PORT 1200 PSI 2EL 3/4″ BSPT M - 1/2″ BSPT M	30	180		
H4E4H3	MWG RO VESSEL FRP 4″ END-PORT 1200 PSI 3EL 3/4″ BSPT M - 1/2″ BSPT M	30	180		

Ref	Elements	L (mm)	S (mm)
H4E4H1	1 x 40"	1244	600
H4E4H2	2 x 40"	2260	1200
H4E4H3	3 x 40"	3276	2200

Ref	Box: WxLxH.	Box: Qnt.	Box: Weight.	Pallet: WxLxH.	Pallet: Qnt.	Pallet: Weight.
H4E4H1						
H4E4H2						
H4E4H3						

Certificates	Manufacturer	Sectors
DM174-2004 CE	**MWG**	Industrial

4” End Port Serie 600/1000/1200 psi Vessel spare parts

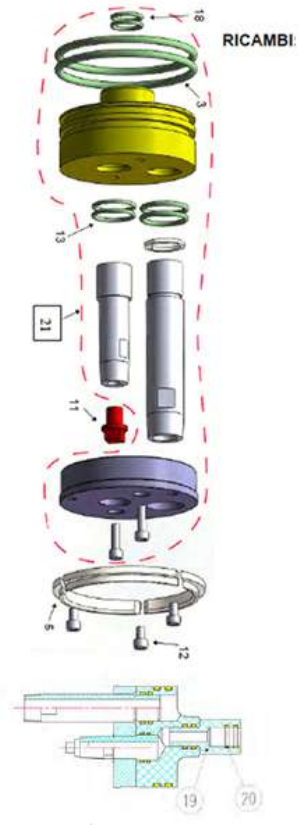

Spare parts

Ref	Description	Fam.	Subfam.		
H4R107	MWG 4″ MPV HEAD SEAL IN EPDM FOR 300÷1200 PSI	30	180		
H4R045	MWG 4″ MPV LOCKING KIT SEGMENT (3PCS) IN AISI 316 FOR 600-1200 PSI	30	180		
H4R083	MWG 4″ MPV PLUG IN ABS FOR 600-1200 PSI	30	180		
H4R205	MWG 4″ MPV SECURING SCREW IN ISI 304 FOR 600-1200 PSI	30	180		
H4R111	MWG 4″ MPV PERMEATE PORT O-RING IN EPDM	30	180		
H4R005	MWG 4″ MPV STRAP FOR 600-1000 PSI L=280 MM	30	180		
H4R001	MWG 4″ MPV SADDLE FOR 300-1200 PSI	30	180		
H2R101	MWG 2,5″ & 4″ MPV ADAPTER SEAL IN EPDM FOR 300÷1200 PSI	30	180		
H4R601	MWG 4″ MPV ADAPTER IN ABS FOR END/SIDE P 300-450 PSI + 600-1000-1200 END P	30	180		
H2R101	MWG 2,5″ & 4″ MPV ADAPTER SEAL IN EPDM FOR 300÷1200 PSI	30	180		
H4R707	MWG 4″ MPV HEAD ASSEMBLY END PORT 600-1000-1200 PSI	30	180		

Item	Ref	Q.ty for each MPV	Material	Note
3	H4R107	4	EPDM	90 x 5,3
5	H4R045	2	AISI 316	
11	H4R083	1	ABS	
12	H4R205	6	AISI 304	M6 x 20
13	H4R111	4	EPDM	25 x 2,65
14 + 15	H4R005	2-3	AISI 304 - Rubber	
16	H4R001	2-3	Rubber	
18	H2R101	4	EPDM	19 x 2,65
19 + 20	H4R601	2	ABS	
20	H2R101	4	EPDM	19 x 2,65
21	H4R707	2		

4” Membrane Vessels Side Port Series 300 S-4

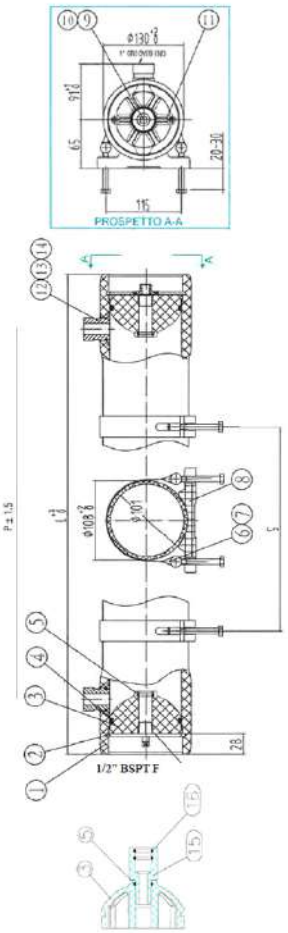

Spare parts

Ref	Description	Fam.	Subfam.		
H4R041	MWG 4″ MPV SEEGER IN AISI 304 FOR 300-450 PSI	30	180		
H4R107	MWG 4″ MPV HEAD SEAL IN EPDM FOR 300÷1200 PSI	30	180		
H2R101	MWG 2,5″ & 4″ MPV ADAPTER SEAL IN EPDM FOR 300÷1200 PSI	30	180		
H4R003	MWG 4″ MPV STRAP FOR 300-450 PSI L=265 MM	30	180		
H4R001	MWG 4″ MPV SADDLE FOR 300-1200 PSI	30	180		
H4R081	MWG 4″ MPV PLUG IN ABS FOR 300-450 PSI	30	180		
H4R101	MWG 4″ MPV O-RING IN EPDM OF PLUG 300-450 PSI	30	180		
H4R209	MWG 4″ MPV SEEGER SCREW M6x14 IN AISI 304	30	180		
H4R601	MWG 4″ MPV ADAPTER IN ABS FOR END/SIDE P 300-450 PSI + 600-1000-1200 END P	30	180		
H2R101	MWG 2,5″ & 4″ MPV ADAPTER SEAL IN EPDM FOR 300÷1200 PSI	30	180		

Item	Ref	Q.ty for each MPV	Material	Note
2	H4R041	4	AISI 31	
4	H4R107	2	EPDM	90 x 5,3
5	H2R101	2	EPDM	19 x 2,65
6 + 7	H4R003	2-3	AISI 304 - Rubber	
8	H4R001	2-3	Rubber	
9	H4R081	1	ABS	
10	H4R101	1	EPDM	23,6 x 3,55
11	H4R209	4	AISI 304	M6 x 14
15 + 16	H4R601	2	ABS	
16	H2R101	4	EPDM	19 x 2,65

4” Side Port 600-1000-1200 Psi Vessel spare parts

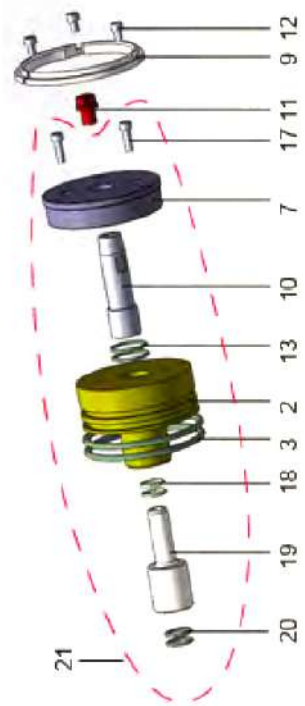

Spare parts

Ref	Description	Fam.	Subfam.		
H4R107	MWG 4″ MPV HEAD SEAL IN EPDM FOR 300÷1200 PSI	30	180		
H4R045	MWG 4″ MPV LOCKING KIT SEGMENT (3PCS) IN AISI 316 FOR 600-1200 PSI	30	180		
H4R083	MWG 4″ MPV PLUG IN ABS FOR 600-1200 PSI	30	180		
H4R205	MWG 4″ MPV SECURING SCREW IN ISI 304 FOR 600-1200 PSI	30	180		
H4R111	MWG 4″ MPV PERMEATE PORT O-RING IN EPDM	30	180		
H4R005	MWG 4″ MPV STRAP FOR 600-1000 PSI L=280 MM	30	180		
H4R001	MWG 4″ MPV SADDLE FOR 300-1200 PSI	30	180		
H4R113	MWG 4″ MPV O-RING OF SEALING PLATE	30	180		
H4R603	MWG 4″ MPV ADAPTER IN ABS FOR SIDE PORT 600-1000-1200 PSI	30	180		
H2R101	MWG 2,5″ & 4″ MPV ADAPTER SEAL IN EPDM FOR 300÷1200 PSI	30	180		
H4R717	4″ MPV HEAD ASSEMBLY SIDE PORT 600-1000-1200 PSI	30	180		

Item	Ref	Q.ty for each MPV	Material	Note
3	H4R107	4	EPDM	90 x 5,3
9	H4R045	2	AISI 316	
11	H4R083	1	ABS	
12	H4R205	6	AISI 304	M6 x 20
13	H4R111	4	EPDM	25 x 2,65
Not shown	H4R005	2 - 3	AISI 304 - Rubber	
Not shown	H4R001	2 - 3	Rubber	
18	H4R113	4	EPDM	17 x 2,65
19 + 20	H4R603	2	ABS	
20	H2R101	4	EPDM	19 x 2,65
21	H4R717	2		

8” Membrane Vessels End Port Series 300 E-8

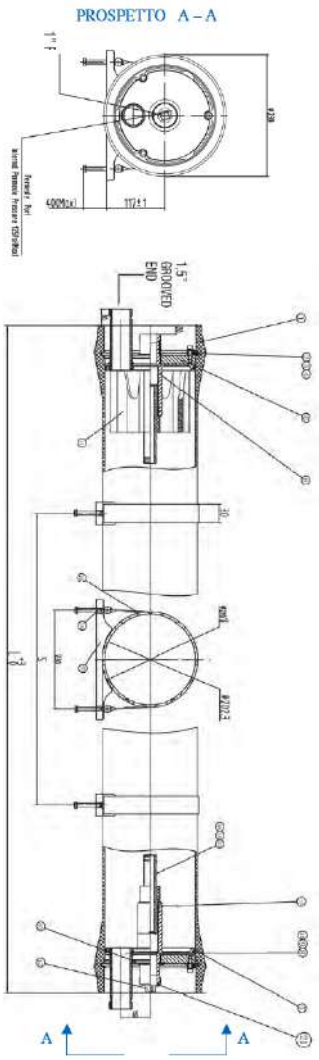

- Fiberglass reinforced plastic pressure vessels series 300 E-8, white painted, UVA-ray proof material;
- Max operating pressure 300 psi (21 bar);
- European 2014/68/EU Directive compliant for pressure equipment (PED);
- Built in accordance with ASME code section X;
- Each vessel is factory tested at 1,5 times max operating pressure;
- Feed/concentrate connections 1 ½” Victaulic in AISI 316;
- Permeate connections 1” BSPT F;
- Straps and saddles included (n.2 pcs from 1 to 3 elements, n.3 pcs from 4 to 6 elements);
- Operating pH Range: 3 ÷ 11 Cleaning pH Range: 2 ÷ 12 (less than 30 minutes);
- 1,125” membrane adapters included.

Ref	Description	Fam.	Subfam.		
H8E5B1	MWG RO VESSEL FRP 8″ END-PORT 300 PSI 1EL 1,5″ VICT. - 1″ BSPT F	35	180		
H8E5B2	MWG RO VESSEL FRP 8″ END-PORT 300 PSI 2EL 1,5″ VICT. - 1″ BSPT F	35	180		
H8E5B3	MWG RO VESSEL FRP 8″ END-PORT 300 PSI 3EL 1,5″ VICT. - 1″ BSPT F	35	180		
H8E5B4	MWG RO VESSEL FRP 8″ END-PORT 300 PSI 4EL 1,5″ VICT. - 1″ BSPT F	35	180		
H8E5B5	MWG RO VESSEL FRP 8″ END-PORT 300 PSI 5EL 1,5″ VICT. - 1″ BSPT F	35	180		
H8E5B6	MWG RO VESSEL FRP 8″ END-PORT 300 PSI 6EL 1,5″ VICT. - 1″ BSPT F	35	180		

Ref	Elements	L (mm)	S (mm)
H8E5B1	1 x 40"	1498	700
H8E5B2	2 x 40"	2514	1460
H8E5B3	3 x 40"	3530	2080
H8E5B4	4 x 40"	4546	1600 x 2
H8E5B5	5 x 40"	5562	2000 x 2
H8E5B6	6 x 40"	6578	2360 x 2

Ref	Box: WxLxH.	Box: Qnt.	Box: Weight.	Pallet: WxLxH.	Pallet: Qnt.	Pallet: Weight.
H8E5B1						
H8E5B2						
H8E5B3						
H8E5B4						
H8E5B5						
H8E5B6						

Certificates	Manufacturer	Sectors
DM174-2004 CE	**MWG**	Industrial

8” Membrane Vessels End Port Series 450 E-8

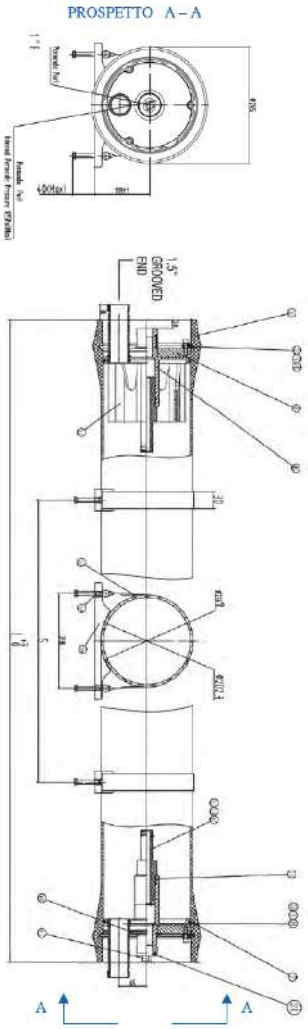

- Fiberglass reinforced plastic pressure vessels series 450 E-8, white painted, UVA-ray proof material;
- Max operating pressure 450 psi (31 bar);
- European 2014/68/EU Directive compliant for pressure equipment (PED);
- Built in accordance with ASME code section X;
- Each vessel is factory tested at 1,5 times max operating pressure;
- Feed/concentrate connections 1 ½” Victaulic in AISI 316;
- Permeate connections 1” BSPT F;
- Operating pH Range: 3 ÷ 11 Cleaning pH Range: 2 ÷ 12 (less than 30 minutes);
- Straps and saddles included (n.2 pcs);
- 1,125” membrane adapters included.

Ref	Description	Fam.	Subfam.		
H8E5C1	MWG RO VESSEL FRP 8″ END-PORT 450 PSI 1EL 1,5″ VICT. - 1″ BSPT F	35	180		
H8E5C2	MWG RO VESSEL FRP 8″ END-PORT 450 PSI 2EL 1,5″ VICT. - 1″ BSPT F	35	180		
H8E5C3	MWG RO VESSEL FRP 8″ END-PORT 450 PSI 3EL 1,5″ VICT. - 1″ BSPT F	35	180		

Ref	Elements	L (mm)	S (mm)
H8E5C1	1 x 40"	1498	700
H8E5C2	2 x 40"	2514	1460
H8E5C3	3 x 40"	3530	2080

Ref	Box: WxLxH	Box: Q.ty	Box: Weight	Pallet: WxLxH	Pallet: Q.ty	Pallet: Weight
H8E5C1						
H8E5C2						
H8E5C3						

Certificates	Manufacturer	Sectors
DM174-2004 CE	**MWG**	Industrial

8” End Port 300-450 Psi Vessels Spare Parts

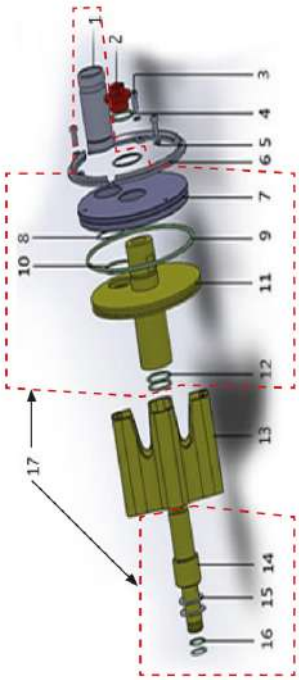

Spare Parts

Ref	Description	Fam.	Subfam.		
H8R081	MWG 8″ MPV PLUG IN ABS FOR 300-1200 PSI	35	180		
H8R203	MWG 8″ MPV LOCKING SEGMENT SCREW IN AISI 304	35	180		
H8R111	MWG 8″ MPV PWT SEAL IN EPDM FOR 300÷1200 PSI	35	180		
H8R031	MWG 8″ MPV SPRING PAD IN AISI 304 FOR LOCKING SEGMENT SCREW	35	180		
H8R041	MWG 8″ MPV LOCKING SEGMENT IN AISI 304 FOR 300-450 PSI	35	180		
H8R108	187x7 O-RING (NEW STYLE 2020) IN EPDM FOR ALL MWG8″ MPV	35	180		
H8R109	MWG 8″ MPV FEED CONCENTRATE PORT SEAL IN EPDM FOR END PORT 300÷1200 PSI	35	180		
H8R111	MWG 8″ MPV PWT SEAL IN EPDM FOR 300÷1200 PSI	35	180		
H8R061	MWG 8″ MPV THRUST CONE IN ABS FOR END PORT 300-450 PSI	35	180		
H8R601	MWG 8″ MPV 1,125″ ADAPTER IN ABS FOR 300-450 PSI	35	180		
H8R651	MWG 8″ MPV 1,125″ ADAPTER PAD IN ABS	35	180		
H8R113	MWG 8″ MPV 1,125″ ADAPTER O-RING IN EPDM FOR 300÷1200 PSI	35	180		
H8R701	MWG 8″ MPV HEAD ASSEMBLY END PORT 300 PSI	35	180		
H8R703	MWG 8″ MPV HEAD ASSEMBLY END PORT 450 PSI	35	180		
H8R001	MWG 8″ MPV SADDLE FOR 300-1200 PSI	35	180		
H8R005	MWG 8″ MPV STRAP FOR 300-450 PSI L=530 MM	35	180		

Item	Ref	Quantity for each MPV	Material
2	H8R081	1	ABS
3	H8R203	6	AISI 304
4	H8R111	1	EPDM
5	H8R031	6	AISI 304
6	H8R041	6	AISI 304
9	H8R108	2	EPDM
10	H8R109	2	EPDM
12	H8R111	4	EPDM
13	H8R061	1	ABS
14 + 16	H8R601	2	ABS
15	H8R651	2	ABS
16	H8R113	4	EPDM
17	H8R701	2	
17	H8R703	2	
Not shown	H8R001	2 - 3	Rubber
Not shown	H8R005	2 - 3	AISI 304 - Rubber

8” Membrane Vessels End Port Series 600 E-8

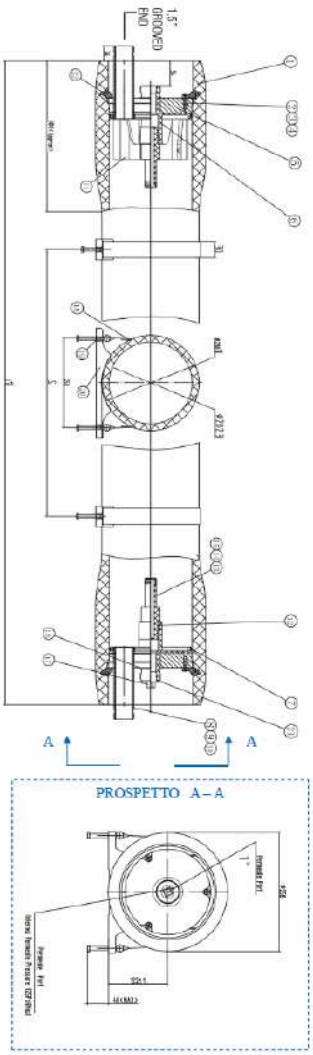

- Fiberglass reinforced plastic pressure vessels series 600 E-8, white painted, UVA-ray proof material;
- Max operating pressure 600 psi (41 bar);
- European 2014/68/EU Directive compliant for pressure equipment (PED);
- Built in accordance with ASME code section X;
- Each vessel is factory tested at 1,5 times max operating pressure;
- Feed/concentrate connections 1 ½” Victaulic in super duplex steel AISI 2507;
- Permeate connections 1” BSPT F;
- Operating pH Range: 3 ÷ 11 Cleaning pH Range: 2 ÷ 12 (less than 30 minutes);
- Straps and saddles included (n.2 pcs);
- 1,125” membrane adapters included.

Ref	Description	Fam.	Subfam.		
H8E5D1	MWG RO VESSEL FRP 8″ END-PORT 600 PSI 1EL 1,5″ VICT. - 1″ BSPT F	35	180		
H8E5D2	MWG RO VESSEL FRP 8″ END-PORT 600 PSI 2EL 1,5″ VICT. - 1″ BSPT F	35	180		

Ref	Elements	L (mm)	S (mm)
H8E5D1	1 x 40"	1514	700
H8E5D2	2 x 40"	2530	1460

Ref	Box: WxLxH.	Box: Qnt.	Box: Weight.	Pallet: WxLxH.	Pallet: Qnt.	Pallet: Weight.
H8E5D1						
H8E5D2						

Certificates	Manufacturer	Sectors
DM174-2004 CE	**MWG**	Industrial

8” Membrane Vessels End Port Series 1000 E-8

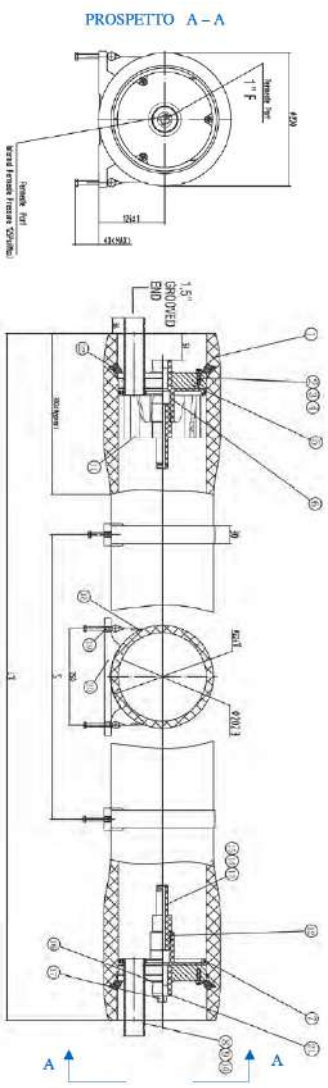

- Fiberglass reinforced plastic pressure vessels series 1000 E-8, white painted, UVA-ray proof material;
- Max operating pressure 1000 psi (69 bar);
- European 2014/68/EU Directive compliant for pressure equipment (PED);
- Built in accordance with ASME code section X;
- Each vessel is factory tested at 1,5 times max operating pressure;
- Feed/concentrate connections 1 ½” Victaulic in super duplex steel AISI 2507;
- Permeate connections 1” BSPT F;
- Operating pH Range: 3 ÷ 11 Cleaning pH Range: 2 ÷ 12 (less than 30 minutes);
- Straps and saddles included (n.2 pcs);
- 1,125” membrane adapters included.

Ref	Description	Fam.	Subfam.		
H8E5G1	MWG RO VESSEL FRP 8″ END-PORT 1000 PSI 1EL 1,5″ VICT. - 1″ BSPT F	35	180		
H8E5G2	MWG RO VESSEL FRP 8″ END-PORT 1000 PSI 2EL 1,5″ VICT. - 1″ BSPT F	35	180		
H8E5G3	MWG RO VESSEL FRP 8″ END-PORT 1000 PSI 3EL 1,5″ VICT. - 1″ BSPT F	35	180		

Ref	Elements	L (mm)	S (mm)
H8E5G1	1 x 40"	1514	700
H8E5G2	2 x 40"	2530	1460
H8E5G3	3 x 40"	3546	2080

Ref	Box: WxLxH	Box: Q.ty	Box: Weight	Pallet: WxLxH	Pallet: Q.ty	Pallet: Weight
H8E5G1						
H8E5G2						
H8E5G3						

Certificates	Manufacturer	Sectors
DM174-2004 CE	**MWG**	Industrial

8” End Port 600-1000-1200 Psi Vessels Spare Parts

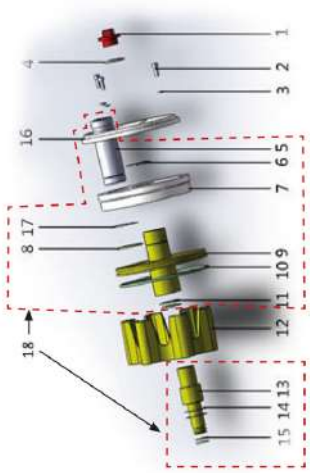

Spare Parts

Ref	Description	Fam.	Subfam.		
H8R081	MWG 8″ MPV PLUG IN ABS FOR 300-1200 PSI	35	180		
H8R203	MWG 8″ MPV LOCKING SEGMENT SCREW IN AISI 304	35	180		
H8R031	MWG 8″ MPV SPRING PAD IN AISI 304 FOR LOCKING SEGMENT SCREW	35	180		
H8R111	MWG 8″ MPV PWT SEAL IN EPDM FOR 300÷1200 PSI	35	180		
H8R109	MWG 8″ MPV FEED CONCENTRATE PORT SEAL IN EPDM FOR END PORT 300÷1200 PSI	35	180		
H8R108	187x7 O-RING (NEW STYLE 2020) IN EPDM FOR ALL MWG8″ MPV	35	180		
H8R111	MWG 8″ MPV PWT SEAL IN EPDM FOR 300÷1200 PSI	35	180		
H8R603	MWG 8″ MPV 1,125″ ADAPTER IN ABS FOR 600-1200 PSI	35	180		
H8R613	MWG 8″ MPV 1,5″ ADAPTER IN ABS FOR 600-1200 PSI	35	180		
H8R651	MWG 8″ MPV 1,125″ ADAPTER PAD IN ABS	35	180		
H8R653	MWG 8″ MPV 1,5″ ADAPTER PAD IN ABS FOR 300-1200 PSI	35	180		
H8R113	MWG 8″ MPV 1,125″ ADAPTER O-RING IN EPDM FOR 300÷1200 PSI	35	180		
H8R115	MWG 8″ MPV 1,5″ ADAPTER O-RING IN EPDM FOR 300-1200 PSI	35	180		
H8R705	MWG 8″ MPV HEAD ASSEMBLY END PORT 600 PSI	35	180		
H8R707	MWG 8″ MPV HEAD ASSEMBLY END PORT 1000 PSI	35	180		
H8R001	MWG 8″ MPV SADDLE FOR 300-1200 PSI	35	180		
H8R009	MWG 8″ MPV STRAP FOR 600-1200 PSI L=580 MM	35	180		

Item	Ref.	Quantity for each MPV	Material
1	H8R081	1	ABS
2	H8R203	6	AISI 304
3	H8R031	6	AISI 304
4	H8R111	1	EPDM
8	H8R109	2	EPDM
10	H8R108	2	EPDM
11	H8R111	4	EPDM
13 + 15	H8R603	2	ABS
13 + 15	H8R613	2	ABS
14	H8R651	2	ABS
14	H8R653	2	ABS
15	H8R113	4	EPDM
15	H8R115	4	EPDM
18	H8R705	2	
18	H8R707	2	
Not shown	H8R001	2 - 3	Rubber
Not shown	H8R009	2 - 3	AISI 304 - Rubber

8” Side Port 300-450 Psi Vessels spare parts

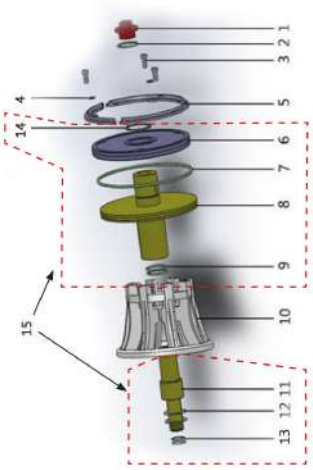

Spare parts

Ref	Description	Fam.	Subfam.		
H8R081	MWG 8″ MPV PLUG IN ABS FOR 300-1200 PSI	35	180		
H8R111	MWG 8″ MPV PWT SEAL IN EPDM FOR 300÷1200 PSI	35	180		
H8R203	MWG 8″ MPV LOCKING SEGMENT SCREW IN AISI 304	35	180		
H8R031	MWG 8″ MPV SPRING PAD IN AISI 304 FOR LOCKING SEGMENT SCREW	35	180		
H8R041	MWG 8″ MPV LOCKING SEGMENT IN AISI 304 FOR 300-450 PSI	35	180		
H8R108	187x7 O-RING (NEW STYLE 2020) IN EPDM FOR ALL MWG8″ MPV	35	180		
H8R111	MWG 8″ MPV PWT SEAL IN EPDM FOR 300÷1200 PSI	35	180		
H8R071	MWG 8″ MPV THRUST CONE IN ABS FOR SIDE PORT 300-450 PSI	35	180		
H8R601	MWG 8″ MPV 1,125″ ADAPTER IN ABS FOR 300-450 PSI	35	180		
H8R611	MWG 8″ MPV 1,5″ ADAPTER IN ABS FOR 300-450 PSI	35	180		
H8R651	MWG 8″ MPV 1,125″ ADAPTER PAD IN ABS	35	180		
H8R653	MWG 8″ MPV 1,5″ ADAPTER PAD IN ABS FOR 300-1200 PSI	35	180		
H8R113	MWG 8″ MPV 1,125″ ADAPTER O-RING IN EPDM FOR 300÷1200 PSI	35	180		
H8R115	MWG 8″ MPV 1,5″ ADAPTER O-RING IN EPDM FOR 300-1200 PSI	35	180		
H8R001	MWG 8″ MPV SADDLE FOR 300-1200 PSI	35	180		
H8R005	MWG 8″ MPV STRAP FOR 300-450 PSI L=530 MM	35	180		

Item	Ref	Quantity for each MPV	Material
1	H8R081	1	ABS
2	H8R111	1	EPDM
3	H8R203	6	AISI 304
4	H8R031	6	AISI 304
5	H8R041	6	AISI 304
7	H8R108	2	EPDM
9	H8R111	4	EPDM
10	H8R071	1	ABS
11 + 13	H8R601	2	ABS
11 + 13	H8R611	2	ABS
12	H8R651	2	ABS
12	H8R653	2	ABS
13	H8R113	4	EPDM
13	H8R115	4	EPDM
Not shown	H8R001	2 - 3	Rubber
Not shown	H8R005	2 - 3	AISI 304 - Rubber

8” Side Port 600-1000-1200 Psi Vessels Spare Parts

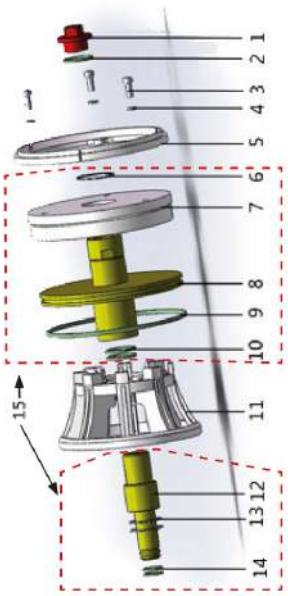

Ref	Description	Fam.	Subfam.		
H8R081	MWG 8″ MPV PLUG IN ABS FOR 300-1200 PSI	35	180		
H8R111	MWG 8″ MPV PWT SEAL IN EPDM FOR 300÷1200 PSI	35	180		
H8R203	MWG 8″ MPV LOCKING SEGMENT SCREW IN AISI 304	35	180		
H8R031	MWG 8″ MPV SPRING PAD IN AISI 304 FOR LOCKING SEGMENT SCREW	35	180		
H8R108	187x7 O-RING (NEW STYLE 2020) IN EPDM FOR ALL MWG8″ MPV	35	180		
H8R111	MWG 8″ MPV PWT SEAL IN EPDM FOR 300÷1200 PSI	35	180		
H8R603	MWG 8″ MPV 1,125″ ADAPTER IN ABS FOR 600-1200 PSI	35	180		
H8R613	MWG 8″ MPV 1,5″ ADAPTER IN ABS FOR 600-1200 PSI	35	180		
H8R651	MWG 8″ MPV 1,125″ ADAPTER PAD IN ABS	35	180		
H8R653	MWG 8″ MPV 1,5″ ADAPTER PAD IN ABS FOR 300-1200 PSI	35	180		
H8R113	MWG 8″ MPV 1,125″ ADAPTER O-RING IN EPDM FOR 300÷1200 PSI	35	180		
H8R115	MWG 8″ MPV 1,5″ ADAPTER O-RING IN EPDM FOR 300-1200 PSI	35	180		
H8R001	MWG 8″ MPV SADDLE FOR 300-1200 PSI	35	180		
H8R009	MWG 8″ MPV STRAP FOR 600-1200 PSI L=580 MM	35	180		

Item	Ref	Quantity for each MPV	Material
1	H8R081	1	ABS
2	H8R111	1	EPDM
3	H8R203	6	AISI 304
4	H8R031	6	AISI 304
9	H8R108	2	EPDM
10	H8R111	4	EPDM
12 + 14	H8R603	2	ABS
12 + 14	H8R613	2	ABS
13	H8R651	2	ABS
13	H8R653	2	ABS
14	H8R113	4	EPDM
14	H8R115	4	EPDM
Not shown	H8R001	2 - 3	Rubber
Not shown	H8R009	2 - 3	AISI 304 - Rubber

8” Membrane Adapters

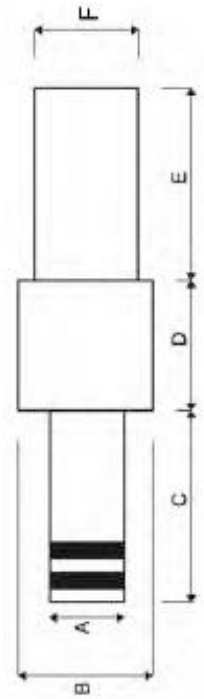

Suitable for 8” membranes;

Material PVC complete with o-rings.

Ref	Description	Fam.	Subfam.		
H8R601	MWG 8″ MPV 1,125″ ADAPTER IN ABS FOR 300-450 PSI	35	180		
H8R611	MWG 8″ MPV 1,5″ ADAPTER IN ABS FOR 300-450 PSI	35	180		
H8R603	MWG 8″ MPV 1,125″ ADAPTER IN ABS FOR 600-1200 PSI	35	180		
H8R613	MWG 8″ MPV 1,5″ ADAPTER IN ABS FOR 600-1200 PSI	35	180		

Ref	Material	A	B	C	D	E	F	For Membrane	For Vessel
H8R601	ABS	28,3 (1,125")	46	70	38	70	36,5	BW30-400 or similar	MWG
H8R611	ABS	38 (1,5")	50	70	36	70	36,55	BW30LE440 or similar	MWG
H8R603	ABS	28,3 (1,125")	46	70	38	53	36,5	BW30-400 or similar	MWG
H8R613	ABS	38 (1,5")	50	70	36	53	36,55	BW30LE440 or similar	MWG

Ref Adatters	Ref O-Ring	Description	Fam.	Subfam.		
H8R601	H8R113	MWG 8″ MPV 1,125″ ADAPTER O-RING IN EPDM FOR 300÷1200 PSI	35	180		
H8R611	H8R115	MWG 8″ MPV 1,5″ ADAPTER O-RING IN EPDM FOR 300-1200 PSI	35	180		
H8R603	H8R113	MWG 8″ MPV 1,125″ ADAPTER O-RING IN EPDM FOR 300÷1200 PSI	35	180		
H8R613	H8R115	MWG 8″ MPV 1,5″ ADAPTER O-RING IN EPDM FOR 300-1200 PSI	35	180		

Certificates	Manufacturer	Sectors
		Industrial

8” Membrane Adapters

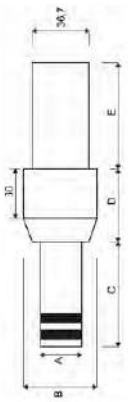

- Suitable for 8 ”diameter membranes - Complete with o-rings.

Ref	Description	Fam.	Subfam.		
EA023	ADAPTER 1.125″ BEKAERT BW	35	180		

Ref	Material	A	B	C	D	E	For Membrane	For Vessel
EA023	PVC	28,5 (1,125")	50	73	50	64	BMW30-400 or similar	Bekaert Style

Ref O-Ring	Description	Fam.	Subfam.		
EA354	ADAPTER O-RING FOR 1.125″ MALE ADAPTER P/N 10182	35	180		

Blank Adapters

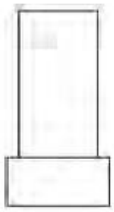

Blank Adapter Kit

- Suitable for 8” membranes; - Material PVC complete with o-rings.

Ref	Description	Ref O-Ring	Fam.	Subfam.		
EA026A	KIT ADAPTER 1.125″ FOR MWG VESSEL	EA264	35	190		

Ref	A (mm)	A (Inch)	For Membrane	For Vessel
EA026A	28,5	1,125"	BW30-400 or similar	MWG

Ref O-Ring	Description	Fam.	Subfam.		
EA264	8" O-RING OR.3093/ # 119 - FOR ADAPTER CODELINE 1.125"	35	180		

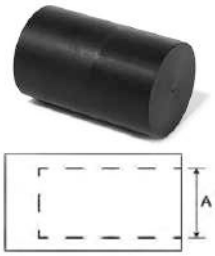

Blank Adapter

- Material PVC

Ref	Description	Fam.	Subfam.		
EA028	KIT BLANK ADAPTER 1.125″ PVC FEMALE	35	180		

Ref	A (mm)	A (Inch)	For Membrane
EA028	28,5	1,125"	BW30-400 or similar

Certificates	Manufacturer	Sectors
		Industrial

Victaulic Style Couplings

- Complete with gaskets; Max operating pressure 1000 psi (69 bar)

Ref	Description	Fam.	Subfam.		
EA030	VICT. TYPE COUPLING CAST-IRON 1000 PSI - 1″ (33.4MM)	35	180		
EA032	VICT. TYPE COUPLING CAST-IRON 1000 PSI - 1″1/4 (42,2 MM)	35	180		
EA031	VICT. TYPE COUPLING CAST-IRON 1000 PSI - 1″1/2 (48,3 MM)	35	180		
EA033	VICT. TYPE COUPLING CAST-IRON 1000 PSI - 2″ (60,3MM)	35	180		
EA034	VICT. TYPE COUPLING CAST-IRON 1000 PSI - 2″1/2 (73.0 MM)	35	180		
EA035	VICT. TYPE COUPLING CAST-IRON 1000 PSI-3″ (88,9 MM)	35	180		

Certificates	Manufacturer	Sectors
		Industrial

Aisi 304 Victaulic Style Couplings – 1200 Psi

- Complete with gaskets; Max operating pressure 1200 psi (83 bar).

Ref	Description	Fam.	Subfam.		
EA190	COUPLING TYPE VICT. AISI 304 1200 PSI -3/4″ (26,7MM)	35	180		
EA191	COUPLING TYPE VICT. AISI 304 1200 PSI -1″ (33,7 MM)	35	180		
EA192	COUPLING TYPE VICT. AISI 304 1200 PSI -1″1/4 (42,4 MM)	35	180		
EA193	COUPLING TYPE VICT. AISI 304 1200 PSI -1″1/2 (48,3 MM)	35	180		
EA194	COUPLING TYPE VICT. AISI 304 1200 PSI -2″ (60,3 MM)	35	180		
EA195	COUPLING TYPE VICT. AISI 304 1200 PSI -2″1/2 (73,0 MM)	35	180		
EA196	COUPLING TYPE VICT. AISI 304 1200 PSI -3″ (88,9 MM)	35	180		

Certificates	Manufacturer	Sectors
		Industrial

Aisi 304 Victaulic Style Couplings – 350 Psi

- Complete with gaskets; Max operating pressure 350 psi (23 bar).

Ref	Description	Fam.	Subfam.		
EA070	VICT. TYPE COUPLING AISI 304 350 PSI - 3/4″ (26,7 MM)	35	180		
EA071	VICT. TYPE COUPLING AISI 304 350 PSI - 1″ (33.4MM)	35	180		
EA072	VICT. TYPE COUPLING AISI 304 350 PSI - 1″1/4 (42,2 MM)	35	180		
EA073	VICT. TYPE COUPLING AISI 304 350 PSI - 1″1/2 (48,3 MM)	35	180		
EA074	VICT. TYPE COUPLING AISI 304 350 PSI - 2″ (60.3MM)	35	180		
EA075A	VICT. TYPE COUPLING AISI 304 350 PSI -2″1/2 (73,0MM)	35	180		
EA075	VICT. TYPE COUPLING AISI 304 350 PSI - 3″ O.D. (76.1 MM)	35	180		
EA076	VICT. TYPE COUPLING AISI 304 350 PSI - 3″ (88.9MM)	35	180		

Certificates	Manufacturer	Sectors
		Industrial

Nylon Victaulic Style Couplings – 300 psi

- Complete with gaskets in EPDM;
- Max operating pressure 300 psi (21 bar).

Ref	Description	Fam.	Subfam.		
EA550	VICT. COUPLING NYLON 300 PSI-1″ (33,4 MM) - DN25	35	180		
EA551	VICT. COUPLING NYLON 300 PSI-1″ 1/4 (42,2 MM) - DN32	35	180		
EA552	VICT. COUPLING NYLON 300 PSI-1″ 2″ (48,3 MM) - DN40	35	180		
EA553	VICT. COUPLING NYLON 300 PSI-1″ 1/2 (60,3 MM) - DN50	35	180		
EA554	VICT. COUPLING NYLON 300 PSI-2″ 1/2 (73,0 MM) - DN65	35	180		
EA555	VICT. COUPLING NYLON 300 PSI-3″ (88,9 MM) - DN80	35	180		
EA556	VICT. COUPLING NYLON 300 PSI-4″ (114,3 MM) - DN10	35	180		

Ref	For our stub pipes	Nominal diameter (pollici)	Nominal diameter (mm)
EA550		1"	33,4
EA551	EA601	1¼"	42,2
EA552	EA602	1½"	48,3
EA553	EA603	2"	60,3
EA554	EA604	2½"	73,0
EA555	EA605	3"	88,9
EA556	EA606	4"	114,3

Certificates	Manufacturer	Sectors
		Industrial

Nylon Victaulic Style Couplings – 150 psi

- Complete with gaskets in EPDM;
- Max operating pressure 150 psi (21 bar).

Ref	Description	Fam.	Subfam.		
EA558	VICT. COUPLING NYLON 150 PSI-8″ (219,1 MM) - DN200	35	180		

Certificates	Manufacturer	Sectors
		Industrial

Stub Pipes to Weld

- Stub pipe with end part to weld;
- Material AISI 316;
- P max 600 psi (42 bar).

Ref	Description	Fam.	Subfam.		
EA080	STUBE PIPE TO WELD CUT GROOVE AISI 316 - 3/4″ (26.7 x 60 MM - SCH 40)	35	180		
EA081	STUBE PIPE TO WELD CUT GROOVE AISI 316 - 1″ (33,7x 60 MM - SCH 40)	35	180		
EA082	STUBE PIPE TO WELD CUT GROOVE AISI 316 - 1″1/4 (42.4 x 60 MM - SCH 40)	35	180		
EA083	STUBE PIPE TO WELD CUT GROOVE AISI 316 - 1″1/2 (48.3 x 60 MM - SCH 40)	35	180		
EA084	STUBE PIPE TO WELD CUT GROOVE AISI 316 - 2″ (60,3x 80 MM - SCH 40)	35	180		
EA085A	STUBE PIPE TO WELD CUT GROOVE AISI 316 - 2″1/2 (73,0 x 90 MM - SCH 40)	35	180		
EA086	STUBE PIPE TO WELD CUT GROOVE AISI 316 - 3″ (88,9x 100 MM - SCH 40)	35	180		

Ref	ANSIB36.10 Schedula	Nominal diameter (mm)	Lenght (mm)
EA080	40	26,7	60
EA081	40	33,4	60
EA082	40	42,2	60
EA083	40	48,3	60
EA084	40	60,3	80
EA085A	40	73,0	90
EA086	40	88,9	100

Certificates	Manufacturer	Sectors
		Industrial

Threaded Stub Pipes

- Stub pipe with end part BSPP threaded;
- Material AISI 316;
- P max 600 psi (42 bar).

Ref	Description	Fam.	Subfam.		
EA050	THREADED STUBE PIPE CUT GROOVE AISI 316 - 3/4″ M(26,7 x 65 MM)	35	180		
EA051	THREADED STUBE PIPE CUT GROOVE AISI 316 - 1″ M (33,7 x 65 MM)	35	180		
EA052	THREADED STUBE PIPE CUT GROOVE AISI 316 - 1″1/4 M(42,4 x 80 MM)	35	180		
EA053	THREADED STUBE PIPE CUT GROOVE AISI 316 - 1″1/2 M(48,3 x 100 MM)	35	180		
EA054	THREADED STUBE PIPE CUT GROOVE AISI 316 - 2″ M (60,3 x 100 MM)	35	180		
EA055	THREADED STUBE PIPE CUT GROOVE AISI 316 - 2″1/2 M(76,1 x 100 MM)	35	180		

Certificates	Manufacturer	Sectors
		Industrial

Stub Pipes

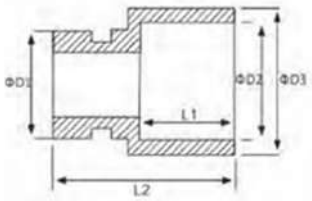

Stub Pipes to Glue

- Stub pipes with end part to glue and the other end part for Victaulic Style couplings;
- In PVC-U.
- PN = 4 bar.

Ref	Description	Fam.	Subfam.		
EA601	PVC-U STUBE PIPE DN32 D32	35	180		
EA602	PVC-U STUBE PIPE DN40 D50	35	180		
EA603	PVC-U STUBE PIPE DN50 D63	35	180		
EA604	PVC-U STUBE PIPE DN65 D75	35	180		
EA605	PVC-U STUBE PIPE DN80 D90	35	180		
EA606	PVC-U STUBE PIPE DN100 D110	35	180		

Ref	For our victaulic style couplings	D1 (mm)	D2 (mm)	D3 (mm)	L1 (mm)	L2 (mm)
EA601	EA551	42	32	40	22	64
EA602	EA552	48	50	60	31	66
EA603	EA553	60	63	74	38	76
EA604	EA554	73	75	87	43	79
EA605	EA555	89	90	104	51	85
EA606	EA556	114	110	125	61	96

Certificates	Manufacturer	Sectors
		Industrial

R.O. PLUS Electric Control Panel for R.O. Systems

- With double conductivity meter (feed and permeate);
- In this way you can:
- Command the high pressure pump and the two solenoid valves for feed interception and flushing;
- Manage and program the most common measurement and signal instruments installed on the system, with highly flexible ways of working;
- Manage and setting the automatic cleaning system;
- Conform to CE Directives;
- Microprocessor;
- LCD display 2 x 16 digit;
- Power supply 230VAC 50-60Hz;
- Available in ABS box with protection class IP65 (ref. DG101 and ref. DG103) or Rack version (ref. DG101R and ref. DG103R);
- Supplied without conductivity probes.
- **RACK Version: Height 180 (mm), Width 220 (mm), Dept 80 (mm)**

Operated functions:

- High pressure pump (max power 736 W);
- Feed electric valve;
- Fluxing electric valve;
- Cleaning electric valve;
- Pump for antiscaling.

Conductivity meter:

- VERSION 1: RO PLUS LC (ref. DG101 ABS box IP65 and ref. DG101R Rack version).
- With conductivity meter for feed 000 ÷ 9,99 mS/cm and conductivity meter for permeate 00,0 ÷ 99,9 µS/cm.
- Warning: with this model you must use one Stainless Steel probe K=1 (ref. DG121) for feed and one Stainless Steel probe for permeate (ref. DG122), to buy separately.
- VERSION 2: RO PLUS HC (ref. DG103 ABS box IP65 and ref. DG103R Rack version)
- With conductivity meter for feed 00,0 ÷ 9,99 mS/cm and conductivity meter for permeate 00,0 ÷ 999 µS/cm
- Warning: with this model you must use n.2 graphite probes K=1 (ref. DG123), one for the feed and one for the permeate, to buy separately.
- The version is displayed turning on the instrument.

External input receivable:

- Low permeate storage tank level;
- High permeate storage tank level;
- Minimum pressure meter;
- Maximum pressure meter;
- Pretreatment (filter or softener) in service;
- Heat pump;
- Failed dosage alarm;
- Stand-by.

Alarms:

- High conductivity; - Low pressure; - High pressure; - Heat pump; - HIGH LOW CONTACT.

Ref	Description	Fam.	Subfam.		
DG101	MWG R.O. PLUS LC CONTROL PANEL	30	185		
DG103	MWG R.O. PLUS HC CONTROL PANEL	30	185		
DG101R	MWG R.O. PLUS LC RACK CONTROL PANEL	30	185		
DG103R	MWG R.O. PLUS HC RACK CONTROL PANEL	30	185		
DG121	MWG CONDUCTIVITY PROBE INOX K=1 CONN.3/4″ W/CABLE	30	185		
DG122	MWG CONDUCTIVITY PROBE INOX K=0.1 CONN.3/4″ W/CABLE	30	185		
DG123	MWG CONDUCTIVITY PROBE CARBON K=1 CONN.3/4″ W/CABLE	30	185		

Ref	Box: WxLxH.	Box: Qnt.	Box: Weight.	Pallet: WxLxH.	Pallet: Qnt.	Pallet: Weight.
DG101						
DG103						
DG101R						
DG103R						
DG121						
DG122						
DG123						

Certificates	Manufacturer	Sectors
CE	**MWG**	Commercial, Industrial

In-Out ⅜” Rotary Pumps for R.O.

- Rotary vane pumps for R.O. systems, direct connection V-band clamp to motor;
- Housing material brass or AISI 303, security by-pass on show models;
- IN-OUT connections ⅜” F BSPT;
- T max = 50°C;
- Service life = almost 4.000 hours (with P=10 bar and good operating conditions).

Ref	Description	Fam.	Subfam.		
DE804A	MWG ROTARY PUMP RO 50 BRASS WITH BYPASS 3/8″ GAS	30	170		
DE805A	MWG ROTARY PUMP RO 150 BRASS WITH BYPASS 3/8″ GAS	30	170		
DE806A	MWG ROTARY PUMP RO 200 BRASS WITH BYPASS 3/8″ GAS	30	170		
DE807A	MWG ROTARY PUMP RO 300 BRASS WITH BYPASS 3/8″ GAS	30	170		
DE808A	MWG ROTARY PUMP RO 400 BRASS WITH BYPASS 3/8″ GAS	30	170		
DE827A	MWG ROTARY PUMP RO 300 AISI W/BY PASS 3/8″ GAS	30	170		
DE828A	MWG ROTARY PUMP RO 400 AISI W/BY PASS 3/8″ GAS	30	170		
DE811A	MWG ROTARY PUMP RO 200 BRASS 3/8″ GAS	30	170		
DE812A	MWG ROTARY PUMP RO 300 BRASS 3/8″ GAS	30	170		
DE813A	MWG ROTARY PUMP RO 400 BRASS 3/8″ GAS	30	170		
DE832A	MWG ROTARY PUMP RO 300 AISI 3/8″ GAS	30	170		
DE833A	MWG ROTARY PUMP RO 400 AISI 3/8″ GAS	30	170		

In-Out ⅜” Rotary Pumps for R.O.

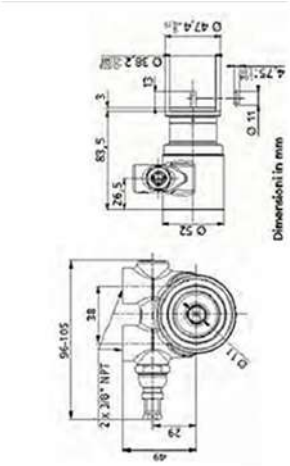

Pompe in ottone

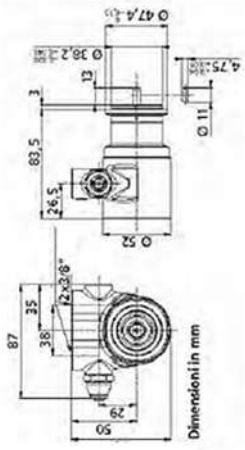

Pompe in acciaio

Ref	Connections	Material	Flow 7 bar (l/h)	Flow 14 bar (l/h)
DE804A	BSPT	Brass	65	55
DE805A	BSPT	Brass	165	150
DE806A	BSPT	Brass	225	206
DE807A	BSPT	Brass	334	315
DE808A	BSPT	Brass	434	415
DE827A	BSPT	AISI 303	334	315
DE828A	BSPT	AISI 303	434	415
DE811A	BSPT	Brass	225	206
DE812A	BSPT	Brass	334	315
DE813A	BSPT	Brass	434	415
DE832A	BSPT	AISI 303	334	315
DE833A	BSPT	AISI 303	434	415

Certificates	Manufacturer	Sectors
DM174-2004 / NSF169 / WRAS	**MWG**	Domestic, Commercial

In-Out ½” Rotary Pumps for R.O.

- Rotary vane pumps for R.O. systems, direct connection V-band clamp to motor;
- Housing material brass or AISI 303;
- IN-OUT Gas connections ½” F BSPT;
- T max = 50°C:
- Service life = almost 4.000 hours (with P=10 bar and good operating conditions).

Ref	Description	Fam.	Subfam.		
DE809A	MWG ROTARY PUMP RO 600 BRASS WITH BYPASS 1/2″ GAS	30	170		
DE810A	MWG ROTARY PUMP RO 800 BRASS WITH BYPASS 1/2″ GAS	30	170		
DE814A	MWG ROTARY PUMP RO 1000 BRASS WITH BYPASS 1/2″ GAS	30	170		
DE817A	MWG ROTARY PUMP RO 600 BRASS 1/2″ GAS	30	170		
DE818A	MWG ROTARY PUMP RO 800 BRASS 1/2″ GAS	30	170		
DE819A	MWG ROTARY PUMP RO 1000 BRASS 1/2″ GAS	30	170		
DE801A	MWG ROTARY PUMP RO 600 MAXI AISI W/BY PASS 1/2″ GAS	30	170		
DE802A	MWG ROTARY PUMP RO 800 MAXI AISI W/BY PASS 1/2″ GAS	30	170		
DE803A	MWG ROTARY PUMP RO 1000 MAXI AISI W/BY PASS 1/2″ GAS	30	170		
DE837A	MWG ROTARY PUMP RO 600 MAXI AISI 1/2″ GAS	30	170		
DE838A	MWG ROTARY PUMP RO 800 MAXI AISI 1/2″ GAS	30	170		
DE839A	MWG ROTARY PUMP RO 1000 MAXI AISI 1/2″ GAS	30	170		

In-Out ½” Rotary Pumps for R.O.

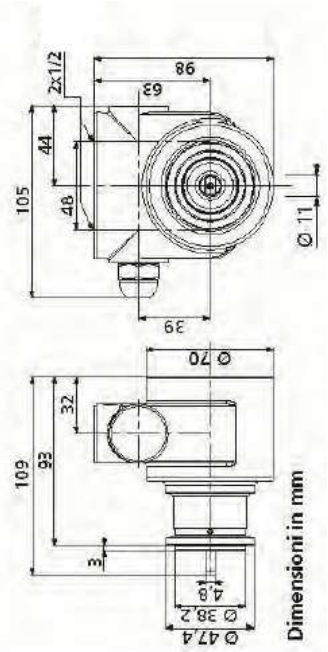

Ref	Connections	Material	Flow 7 bar (l/h)	Flow 14 bar (l/h)
DE809A	BSPT	Brass	620	797
DE810A	BSPT	Brass	820	797
DE814A	BSPT	Brass	1020	997
DE817A	BSPT	Brass	620	597
DE818A	BSPT	Brass	820	797
DE819A	BSPT	Brass	1020	997
DE801A	BSPT	AISI 303	620	597
DE802A	BSPT	AISI 303	820	797
DE803A	BSPT	AISI 303	1020	997
DE837A	BSPT	AISI 303	620	597
DE838A	BSPT	AISI 303	820	797
DE839A	BSPT	AISI 303	1020	997

Certificates	Manufacturer	Sectors
DM174-2004 / NSF169 / WRAS	**MWG**	Domestic, Commercial, Industrial

Motors Direct Connection for Rotary Pumps

- Single phase motors direct connection for rotary vane pumps;
- Complete with thermic protection (our ref. DE845 has an automatic reset thermal protection when the temperature decreases);
- Power supply 220V – 50 Hz.

Ref	Description	Fam.	Subfam.		
DE850	MOTOR 300W-230V-50Hz SINGLE PHASE DIRECT CONNECTIONS	30	170		
DE845	MOTOR 550W-230V-50Hz 4 POLES SINGLE PHASE DIRECTCONNECTIONS	30	170		

Ref	A (mm)	B (mm)	C (mm)	D (mm)	E (mm)	F (mm)	G (mm)
DE850	47	156	97	120	80	200	138
DE845	44	205	*	172	*	241	*

* Not applicable: for further details, please consult our Technical Department.

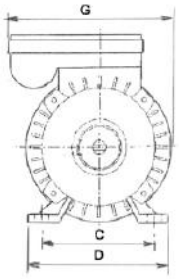

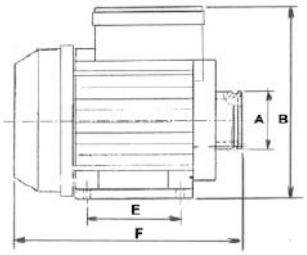

Ref	Electrical Input (a)	RPM	IP Protection	For Pumps
DE850	1,6	1.300	IP 44	RO 200 RO 300
DE845	4,2	1.360	IP 55	RO 400 RO 600

Certificates	Manufacturer	Sectors
CE		Domestic, Commercial, Industrial

Motors for Rotary Pumps for R.O. 300-400-600-800-1000

- Range of single and three phase motor for application with rotary vane pumps, using coupling and adapter;
- 4 poles motor, power supply 220V – 50 Hz single phase, 380V – 50 Hz three phase;
- Protection class IP55;

Ref	Description	Fam.	Subfam.		
DE860	MOTOR 1/2 CV-M71-4POLI 220V/50HZ SINGLE PHASE B3/B14	30	170		
DE861	MOTOR 3/4 CV-M80-4POLI 220V/50HZ SINGLE PHASE B3/B14	30	170		
DE862	MOTOR 1 CV-M80-4POLI 220V/50HZ SINGLE PHASE B3/B1	30	170		
DE863	MOTOR 1/2 CV-M71 4 POLI 220/380V-50HZ TRIPHASE B3/B14	30	170		
DE864	MOTOR 3/4 CV-M80 4 POLI 220/380V-50HZ TRIPHASE B3/B14	30	170		
DE865	MOTOR 1 CV-M80 4 POLI 220/380V-50HZ TRIPHASE B3/B14	30	170		

Model	A (mm)	B (mm)	C (mm)	D (mm)	E (mm)	F (mm)	G (mm)	H (mm)
0,5 CV	30	90	222	7	141	112	142	10
0,75 CV	40	100	255	10	157	125	160	13
1 CV	40	100	255	10	157	125	160	13

Ref	Power (cv)	Power (w)	Electrical Input (a)	RPM	For pump
DE860	0,5	370	3,1	1360	RO 300 RO 400
DE861	0,75	550	3,9	1360	RO 600
DE862	1	750	5,6	1370	RO800 RO1000
DE863	0,5	370	2,2	1360	RO 300 RO 400
DE864	0,75	550	2,8	1360	RO 600
DE865	1	750	3,5	1360	RO800 RO1000

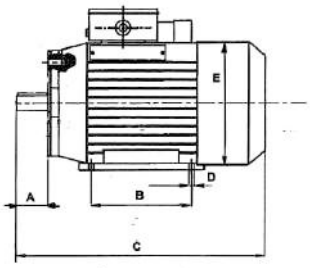

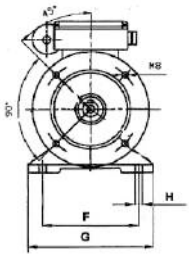

Power Ref	Coupling Ref	Adapter Ref
DE860	DE872	DE871
DE861	DE874	DE873
DE862	DE874	DE873
DE863	DE872	DE871
DE864	DE874	DE873
DE865	DE874	DE873

Certificates	Manufacturer	Sectors
CE		Domestic, Commercial, Industrial

Adapter Couplings and Adapters for Rotary Pumps Models R.O. 300-400-600-800-1000

Ref	Description	Fam.	Subfam.		
DE871	ADAPTER GR.71 -B3/B14	30	170		

Ref	Description	Fam.	Subfam.		
DE873	ADAPTER GR.80-B3/B14	30	170		

Ref	Description	Fam	Subfam.		
DE872	COUPLING GR.71	30	170		

Ref	Description	Fam	Subfam.		
DE874	COUPLING GR.80	30	170		

Flowmeters

- Flowmeters (the reading is taken in correspondence with the top edge of the float) with wide range of measuring scale and of end connections (d20 ÷ d75), good level of accuracy with simple operation and very limited maintenance;
- Standard fluid = water; - Measuring tube in transparent PVC-U, Float in PP and O-ring in EPDM;
- Isolating or control valves may be mounted both upstream or downstream the flowmeter;
- Maximum working pressure with water up to 25°C = 10 bar; - 60°C = 1,5 bar - Temperature range = 5 ÷ 60°C.

FVCI				FSIV			
D	B	C	E	D	B	C	E
20	208	176	170	40	408	356	350
25	229	191	185	63	432	356	350
32	250	206	200	75	444	356	350

Ref	Description	Connect.	Fam.	Subfam.		
DG030	FLOWMETER FCIV D20 PVC EPDM 20-200 L/H PVC CLEARPP FLOAT	d20	30	185		
DG032	FLOWMETER FCIV D25 PVC EPDM 30-350 L/H PVC CLEARPP FLOAT	d25	30	185		
DG034	FLOWMETER FCIV D32 PVC EPDM 60-600 L/H PVC CLEARPP FLOAT	d32	30	185		
DG036	FLOWMETER FCIV D32 PVC EPDM 100-1000 L/H PVC CLEAR PP FLOAT	d32	30	185		
DG038	FLOWMETER FSIV D40 PVC EPDM 160-1600 L/H PVC CLEAR PP FLOAT	d40	30	185		
DG040	FLOWMETER FSIV D40 PVC EPDM 200-2500 L/H PVC CLEAR PP FLOAT	d40	30	185		
DG042	FLOWMETER FSIV D63 PVC EPDM 350-3500 L/H PVC CLEAR PP FLOAT	d63	30	185		
DG044	FLOWMETER FSIV D63 PVC EPDM 500-5000 L/H PVC CLEAR PP FLOAT	d63	30	185		
DG046	FLOWMETER FSIV D75 PVC EPDM 1000-8000 L/H PVC CLEAR PP FLOAT	d75	30	185		
DG048	FLOWMETER FSIV D75 PVC EPDM 1000-10000 L/H PVC CLEAR PP FLOAT	d75	30	185		
DG050	FLOWMETER FSIV D75 PVC EPDM 5000-25000 L/H PVC CLEAR PP FLOAT	d75	30	185		

Certificates	Manufacturer	Sectors
EAC		Commercial, Industrial

ACCESSORIES: Threaded connections not included, to order separately.

Ref	Description	Fam.	Subfam.		
DG061	BFV THREADED CONNECTION BSP 1/2″ PVCU	30	185		
DG063	BFV THREADED CONNECTION BSP 3/4″ PVCU	30	185		
DG065	BFV THREADED CONNECTION BSP 1″ PVCU	30	185		
DG067	BFV THREADED CONNECTION BSP 1 1/4″ PVCU	30	185		
DG069	BFV THREADED CONNECTION BSP 2 ″ PVCU	30	185		
DG071	BFV THREADED CONNECTION BSP 2 1/2 ″ PVCU	30	185		

Ref	For Flowmeter
DG061	DG030
DG063	DG032
DG065	DG034 - DG036
DG067	DG038 - DG040
DG069	DG042 - DG044
DG071	DG046 - DG048 - DG050

PL Series Metering Pumps Horizontal Mounting

- PL series metering pumps horizontal mounting;
- Constant or proportional feeding, with pulse multiplier or pulse divider, dosage based on a mA signal or a digital signal (from 1 pulse/minute at 180 pulses/minute);
- Microprocessor technology;
- Manual stroke length adjustment;
- Body pump's in PVDF (and o-rings in VITON), with manual venting;
- Black enclosure in PP material;
- Protection class IP65;
- Audible noise 73,4 dB(A);
- Environment temperature 10 ÷ 45°C;
- Chemical temperature 0 ÷ 50°C;
- Power supply 230Vac 50/60hz with European transformer;
- Each pump is shipped with a Kit Assembly, delayed fuse, level probe with axial foot filter (PVDF), 5 bar injection valve (PVDF), PVDF delivery hose (length 2 m), PVC suction hose (length 2 m), discharge hose (length 2 m), input signal cable (length 2,5 m);
- Available also the self-venting version (see the following table).

Ref	Description	Fam.	Subfam.		
DG299	MWG METERING PUMP HORIZ. PL 1 L/H @18 BAR PVDF OR VITON SELF VENTING	30	170		
DG300	MWG METERING PUMP HORIZONTAL PL 2 L/H @ 18 BAR PVDF W/OR VITON	30	170		
DG303	MWG METERING PUMP HORIZ. PL 5,5 L/H @8 BAR PVDF OR VITON SELF VENTING	30	170		
DG304	MWG METERING PUMP HORIZONTAL PL 8 L/H @ 8 BAR PVDF W/OR VITON	30	170		

Certificates	Manufacturer	Sectors
NSF50 NSF61 DM174-2004 CE	**MWG**	Commercial, Industrial

MF Series Metering Pumps Horizontal Mounting

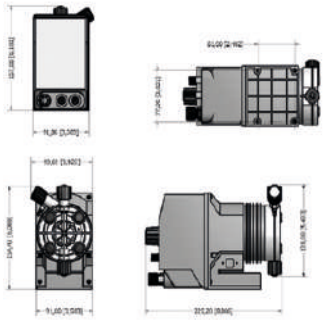

- MF series metering digital pumps horizontal mounting;
- Microprocessor technology (Constant, Divide, Multiply, PPM, Batch, Volt, mA, %, MLQ), stand-by and flow sensor input, alarm output and level control. Recovery fault mode, work-pause mode and upkeep mode (from 1 pulse/minute at 180 pulses/minute);
- Body pump's in PVDF (and o-rings in VITON), with manual venting;
- Black enclosure in PP material, protection class IP65;
- Audible noise 73,4 dB(A);
- Environment temperature 10 ÷ 45°C, chemical temperature 0 ÷ 50°C;
- Power supply 230Vac 50/60hz with European transformer;
- Each pump is shipped with a Kit Assembly, delayed fuse, level probe with axial foot filter (PVDF), 5 bar injection valve (PVDF), PVDF delivery hose (length 2 m), PVC suction hose (length 2 m), discharge hose (length 2 m), input signal cable (length 2,5 m);
- Available also the self-venting version (see the following table).

Ref	Description	Fam.	Subfam.		
DG309	MWG METERING PUMP HORIZ. MF 1 L/H @18 BAR PVDF OR VITON SELF VENTING	30	170		
DG310	MWG METERING PUMP HORIZONTAL MF 2 L/H @ 18 BAR PVDF W/OR VITON	30	170		
DG313	MWG METERING PUMP HORIZ. MF 5,5 L/H @8 BAR PVDF OR VITON SELF VENTING	30	170		
DG314	MWG METERING PUMP HORIZONTAL MF 8 L/H @ 8 BAR PVDF W/OR VITON	30	170		

Certificates	Manufacturer	Sectors
NSF50 NSF61 DM174-2004 CE	**MWG**	Commercial, Industrial

MF Series Metering Pumps Vertical Mounting

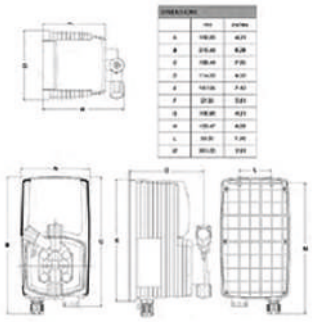

- MF series metering digital pumps vertical mounting;
- Microprocessor technology (Constant, Divide, Multiply, PPM, Batch, Volt, mA, %, ml/q), with level control. Recovery fault mode, work-pause mode and upkeep mode (from 1 pulse/hour at 180 pulses/minute);
- Body pump's in PVDF (and o-rings in VITON) or PP (and o-rings in EPDM), with manual venting;
- Black enclosure in PP material;
- Protection class IP65;
- Audible noise 70,4 dB(A);
- Environment temperature 10 ÷ 45°C;
- Chemical temperature 0 ÷ 50°C;
- Power supply 230Vac 50/60hz with European transformer;
- Each pump is shipped with a Kit Assembly, delayed fuse, level probe with axial foot filter (PVDF), 5 bar injection valve (PVDF), PVDF delivery hose (length 2 m), PVC suction hose (length 2 m), discharge hose (length 2 m), input signal cable (length 2,5 m);
- Available also the self-venting version (see the following table).

Ref	Description	Fam.	Subfam.		
DG319	MWG METERING PUMP VERTICAL. MF 1 L/H @15 BAR PVDF OR VITON SELF VENTING	30	170		
DG320	MWG METERING PUMP VERTICAL MF 2 L/H @ 15 BAR PVDF W/OR VITON	30	170		
DG320A	MWG METERING PUMP VERTICAL MF 2 L/H @ 15 BAR PP W/OR EPDM	30	170		
DG323	MWG METERING PUMP VERTICAL. MF 4 L/H @7 BAR PVDF OR VITON SELF VENTING	30	170		
DG324	MWG METERING PUMP VERTICAL MF 6 L/H @ 7 BAR IN PVDF W/OR VITON	30	170		

Certificates	Manufacturer	Sectors
NSF50 NSF61 DM174-2004 CE	**MWG**	Commercial, Industrial

CL Series Metering Pumps Vertical Mounting

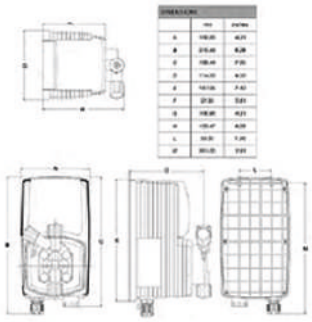

- CL series metering pumps vertical mounting;
- Microprocessor technology; constant pump with level control, flow rate control and 0-10% divider (from 1 pulse/minute at 180 pulses/minute);
- Body pump's in PVDF (and o-rings in VITON), with manual venting;
- Black enclosure in PP material;
- Protection class IP65;
- Audible noise 74 dB(A);
- Environment temperature 10 ÷ 45°C;
- Chemical temperature 0 ÷ 50°C;
- Power supply 230Vac 50/60hz with European transformer;
- Each pump is shipped with a Kit Assembly, delayed fuse, level probe with axial foot filter (PVDF), 5 bar injection valve (PVDF), PVDF delivery hose (length 2 m), PVC suction hose (length 2 m), discharge hose (length 2 m), input signal cable (length 2,5 m);
- Available also the self-venting version (see the following table).

Ref	Description	Fam.	Subfam.		
DG329	MWG METERING PUMP VERTIC. CL 1 L/H @15 BAR PVDF OR VITON SELF VENTING	30	170		
DG330	MWG METERING PUMP VERTICAL CL 2 L/H @ 15 BAR PVDF W/OR VITON	30	170		
DG333	MWG METERING PUMP VERTIC. CL 4 L/H @7 BAR PVDF OR VITON SELF VENTING	30	170		
DG334	MWG METERING PUMP VERTICAL CL 6 L/H @ 7 BAR PVDF W/OR VITON	30	170		

Certificates	Manufacturer	Sectors
NSF50 NSF61 DM174-2004 CE	**MWG**	Commercial, Industrial

Metering Pumps Accessories

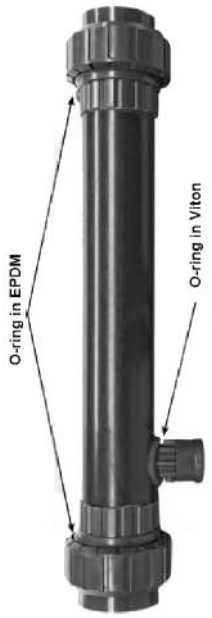

Ref	Description	Fam.	Subfam.		
DG452	MWG PVDF TUBE 6X4 ROLL L=5 M	30	170		
DG453	MWG PVC TUBE 6X4 ROLL L=100 M	30	170		
DG454	MWG PE TUBE 6X4 ROLL L=100 M	30	170		
DG460	MWG MAINTENANCE KIT ASSY METERING PUMP HORIZONTAL PVDF -ORING VITON	30	170		
DG460A	MWG MAINTENANCE KIT ASSY METERING PUMP HORIZ. PVDF W/OR VITON SELF-VENTING	30	170		
DG462	MWG MAINTENANCE KIT ASSY METERING PUMP VERTICAL PVDF -ORING VITON	30	170		
DG462A	MWG MAINTENANCE KIT ASSY METERING PUMP VERT. PVDF W/OR VITON SELF-VENTING	30	170		
DG399	MWG LEVEL PROBE WITH AXIAL FOOT FILTER	30	170		

Certificates	Manufacturer	Sectors
	MWG	Commercial, Industrial

Metering Pumps Accessories

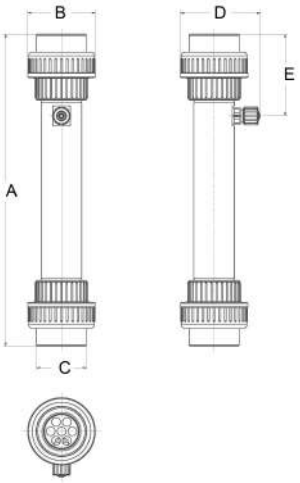

STATIC MIXERS

- PVC-U static mixer filled with PP mixing elements;
- With injection valve 1/2'' - 4x6 0,3 bar;
- Inspectionable.

Ref	Description	Fam.	Subfam.		
DG470	MWG STATIC MIXER 1 1/4″	30	170		
DG472	MWG STATIC MIXER 1 1/2″	30	170		
DG473	MWG STATIC MIXER 2″	30	170		

Ref	Fittings	A (mm)	B (mm)	C (mm)	D (mm)	E (mm)
DG470	1¼ "	390	72	53	134,5	95
DG472	1½"	438	83	59	147	119
DG473	2"	462,5	100	74	118	121

Certificates	Manufacturer	Sectors
	MWG	Commercial, Industrial

Accessories

Ref	Description	Fam.	Subfam.		
DG450	MWG MOUNTING BRACKET FOR VERTICAL PUMP	30	170		

Certificates	Manufacturer	Sectors

Metering Pumps Accessories

Turbine pulse emitter water meter

- Threaded pulse emitter water meter for cold and hot water, single (mod. 15 - 20 - 25 - 30 40) and multiple (mod. 50) jet counter with wet dial;
- Thread sizes range: from ½” to 2”;
- Brass case and head (except for 50 mm 2” model with cast iron case and head);
- Range temperature = 4 ÷ 30°C;
- Max operating pressure = 16 bar;
- Constant K = 4 pulses/liter;
- 2m cable length (RG58), equipped with BNC connector;
- Reed contact with 109 closing operations;
- Max voltage 250 VAC, 200 VDC;
- Max current 1 A;
- Max power 10 VA.

Ref	Description	Gauge (Inch)	Fam.	Subfam.		
DG480	MWG TURBINE PULSE EMITTER WATER METER W/WET DIAL 15 MM	½	30	170		
DG481	MWG TURBINE PULSE EMITTER WATER METER W/WET DIAL 20 MM	¾	30	170		
DG482	MWG TURBINE PULSE EMITTER WATER METER W/WET DIAL 25 MM	1	30	170		
DG483	MWG TURBINE PULSE EMITTER WATER METER W/WET DIAL 30 MM	1¼	30	170		
DG484	MWG TURBINE PULSE EMITTER WATER METER W/WET DIAL 40 MM	1½	30	170		
DG485	MWG TURBINE PULSE EMITTER WATER METER W/WET DIAL 50 MM	2	30	170		

Certificates	Manufacturer	Sectors
DM174-2004	**MWG**	Commercial, Industrial

Accessories

- KDPV Kit, Signal Splitter.

Ref	Description	Fam.	Subfam.		
DG467	MWG KDPV KIT	30	170		

TURBINE PULSE EMITTER WATER METER

Certificates	Manufacturer	Sectors
	MWG	Commercial, Industrial

Dosing Systems

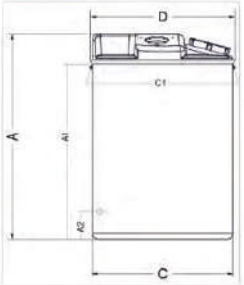

- Suitable to be assembled with dosing pumps on catalogue;
- Each dosing system consisting in:
- - nr.1 tank in polyethylene (HDPE) for chemical mixing;
- - nr.1 suction lances with o-ring in VITON;
- - nr.1 manual stirrer;
- All dosing station components assembled on are enclosed into tank diameter;

- Stirrers screwed on thread metal insert are tilted for better central mixing;
- Stainless Steel (AISI 316) fixing screws with rubber cap;
- With level indicator;

- Tanks can be assembled with:
- - nr.1 metering pump (not included in the dosing system);
- - nr.1 manual stirrer;
- - nr.1 feed water valve;
- - nr.1 outgassing pump hose;
- - nr.1 outgassing valve (on the higher top side);
- - nr.1 bleed water valve (on the lower side);
- - nr.1 suction lance;
- Range temperature = 4 ÷ 40°C;
- On demand are available safety bunds.

Ref	Description	Fam.	Subfam.		
DG400	MWG DOSING SYSTEM ASSEMBLY 50 LITERS W/OR VITON	30	170		
DG402	MWG DOSING SYSTEM ASSEMBLY 120 LITERS W/OR VITON	30	170		
DG404	MWG DOSING SYSTEM ASSEMBLY 250 LITERS W/OR VITON	30	170		

Ref	A (mm)	A1-Feed water valve height (mm)	C (mm)	C1 (mm)	D (mm)	Feed water (mm)
DG400	505	425	420	420	420	95
DG402	735	650	475	485	495	650
DG404	850	780	610	610	610	120

Certificates	Manufacturer	Sectors
	MWG	Commercial, Industrial

Dosing Systems Spare Parts

Suction lances for dosing system

- For pumps up to 10 l/h;
- Level switch;
- Foot valve and foot filter;
- Adjustable height;
- 1 ½" pipe fitting;
- Lateral output (½" fitting);
- PVC body.

Ref	Description	Fam.	Subfam.		
DG430	MWG SUCTION LANCE L=63 CM W/OR VITON	30	170		
DG434	MWG SUCTION LANCE L=108 CM W/OR VITON	30	170		

Ref	Dosing system	A (mm)	B (mm)
DG430	DG400 - DG402	630	740
DG434	DG404	1080	1190

Certificates	Manufacturer	Sectors
	MWG	Commercial, Industrial

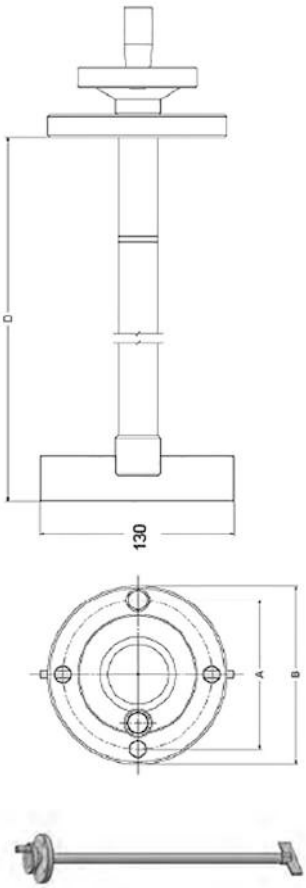

Manual stirrer for dosing system

- PVC-U shaft;
- 2-blade impeller;
- Impeller diameter = 130 mm
- Holes diameter = 8,5 mm.

Ref	Description	Fam.	Subfam.		
DG440	MWG MANUAL MIXER H=45 CM	30	170		
DG442	MWG MANUAL MIXER H=65 CM	30	170		
DG444	MWG MANUAL MIXER H=77 CM	30	170		

Ref	Dosing system	A (mm)	ø B (mm)	D (mm)	Holes number and position
DG440	DG400 DG400A	100	120	450	4 at 90°
DG442	DG402 DG402A	125	145	650	3 at 120°
DG444	DG404 DG404A	125	145	770	3 at 120°

Certificates	Manufacturer	Sectors
	MWG	Commercial, Industrial

Dosing System Accessories

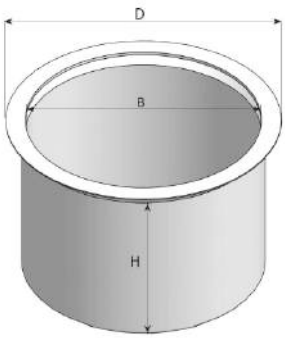

Safety bunds

- Material in polyethylene (HDPE), with reinforced collar for increasing security;
- Range temperature = 4 ÷ 40°C.

Ref	Description	Fam.	Subfam.		
DG410	MWG SAFETY BUND FOR DOSING SYSTEM 50 LITERS	30	170		
DG412	MWG SAFETY BUND FOR DOSING SYSTEM 120 LITERS	30	170		
DG414	MWG SAFETY BUND FOR DOSING SYSTEM 250 LITERS	30	170		

Ref	Volume (liters)	B (mm)	D (mm)	H (mm)
DG410	60	430	510	425
DG412	120	520	545	615
DG414	300	660	695	875

Certificates	Manufacturer	Sectors
	MWG	Commercial, Industrial

Dosing Systems Spare Parts

Tank for chemical

- Material in polyethylene (HDPE), suitable for chemical mixing;
- Tanks can be assembled with:
- -nr.1 metering pump (not included in the dosing system);
- -nr.1 manual stirrer;
- -nr.1 feed water valve;
- -nr.1 outgassing pump hose;
- -nr.1 outgassing valve (on the higher top side);
- -nr.1 bleed water valve (on the lower side);
- -nr.1 suction lance;
- Range temperature = 4 ÷ 40°C.

Ref	Description	Fam.	Subfam.		
DG420	MWG SPARE CONTAINER 50 LITERS	30	170		
DG422	MWG SPARE CONTAINER 120 LITERS	30	170		
DG424	MWG SPARE CONTAINER 250 LITERS	30	170		

Ref	Volume (litres)	A (mm)	A1 Feed water valve height (mm)	C (mm)	C1 (mm)	D (mm)
DG420	95	505	425	420	420	420
DG422	650	735	650	475	485	495
DG424	120	850	780	610	610	610

Certificates	Manufacturer	Sectors
	MWG	Commercial, Industrial

EUROTROL®
WATER TREATMENT COMPONENTS

UV sterilizers MWG

Back to index

Residential U.V. Sterilizers Inox

- Monolamp U.V. sterilizer of close construction in AISI 304 polished material for point-of-use treatment devices;
- Complete with n.2 diameter 2” fixing clips and with n.2 JACO ¼” elbows;
- Power box with electronic circuit, cable and plug;
- Failure led and alarm system;
- Lamp quartz sheath;
- Max operating pressure 7 bar;
- Temperature 2 ÷ 40°C;
- Power supply 230 V – 50 Hz;
- Irradiation > 30 mJ/cm2;
- Lamp life 8.000 hours;
- Protection class IP42;
- Horizontal installation (only HA300 can be installed in vertical position).

Ref	Description	Fam.	Subfam.		
HA300	MWG UV STERILIZER HR-60 220V-50HZ 1/4″ BSP M	55	250		
HA302	MWG UV STERILIZER PC-1 10WATT 220V-50HZ -1/4″ BSP M	55	250		

Ref	Max flow (l/h)	Power (W)	Connections	Diameter (mm)	Length (mm)
HA300	240	10	¼" BSP M	50,8	260
HA302	240	10	¼" BSP M	50,8	268

Box: WxLxH	Box: Q.ty	Box: Weight	Pallet: WxLxH	Pallet: Q.ty	Pallet: Weight

Certificates	Manufacturer	Sectors
DM174-2004, ACS, CE	**MWG**	Domestic

Residential U.V. Sterilizers W Series

- To be used for residential water disinfection systems;
- Monolamp U.V. sterilizer of close construction in AISI 304 polished material;
- Power box with electronic circuit, cable and plug;
- Failure led and alarm system;
- Lamp quartz sheath;
- Max operating pressure 7 bar;
- Temperature 2 ÷ 40°C;
- Power supply 230 V – 50 Hz;
- Irradiation > 30 mJ/cm2;
- Lamp life 10.000 hours;
- Protection class IP42;
- Horizontal installation.

Ref	Description	Fam.	Subfam.		
HA310	MWG UV STERILIZER W-180 220V-50HZ 15W - 1/2″ BSP M	55	250		
HA315	MWG UV STERILIZER W-360 220V-50HZ 21W-1/2″ BSP M	55	250		
HA320	MWG UV STERILIZER W-480 220V-50HZ 29W-1/2″ BSP M	55	250		
HA325	MWG UV STERILIZER W-720 220V-50HZ 40W - 3/4″ BSP M	55	250		

Ref	Max flow (l/h)	N. Lamps	Power (W)	Diameter (mm)	Lenght (mm)
HA310	680	1	15	63,5	364
HA315	1360	1	21	63,5	544
HA320	1810	1	29	63,5	694
HA325	2720	1	40	63,5	924

Ref	Box: WxLxH.	Box: Q.ty	Box: Weight.	Pallet: WxLxH.	Pallet: Q.ty	Pallet: Weight.
HA310						
HA315						
HA320						
HA325						

Certificates	Manufacturer	Sectors
DM174-2004, ACS, CE	**MWG**	Domestic

Industrial U.V. Sterilizers FC Series

- To be used for commercial and industrial water disinfection systems;
- Monolamp U.V. sterilizer with polished AISI 304 sterilizing chamber with inspection window and drain connection;
- Electric box with electronic circuit, connection cable, operating time meter and switch;
- Operating and failure led, with alarm system (excepted models FC-35 and FC-45);
- Lamp quartz sheath;
- Max operating pressure 7 bar, temperature 2 ÷ 40°C;
- Power supply 230 V – 50 Hz, irradiation > 40 mJ/cm2 , lamp life 10.000 hours;
- Protection class IP43;
- Possibility of connection with shut down solenoid valve (only for models FC-35 and FC-45);
- Horizontal installation.

Ref	Description	Fam.	Subfam.		
HA350	MWG UV STERILIZER FC-8 220V-50HZ 29W - 3/4″ BSP M	55	251		
HA355	MWG UV STERILIZER FC-12 220V-50HZ 40W - 1″ BSP M	55	251		
HA360	MWG UV STERILIZER FC-15 220V-50HZ 65W - 1″ BSP M	55	251		
HA365	MWG UV STERILIZER FC-20 220V-50HZ 65W-1 1/2″ BSP M	55	251		
HA370	MWG UV STERILIZER FC-24 220V-50HZ 85W - 1 1/2″ BSPM	55	251		
HA375	MWG UV SERILIZER FC-35 220V-50HZ 100W-2″ BSP M	55	251		
HA380	MWG UV STERILIZER FC-45 220V-50HZ 120W - 2″ BSP M	55	251		

Ref	AISI	Max Flow (l/h)	Power (W)	Connections	Diameter (mm)	Lenght (mm)
HA350	304	1.810	29	¾" BSP M	114	710
HA355	304	2.720	40	1" BSP M	133	940
HA360	304	3.400	65	1" BSP M	133	940
HA365	304	4.536	65	1" ½ BSP M	160	940
HA370	304	5.443	85	1" ½ BSP M	160	940
HA375	304	7.938	100	2" BSP M	160	1.235
HA380	304	10.200	120	2" BSP M	160	1.235

Ref	Box: WxLxH.	Box: Q.ty	Box: Weight.	Pallet: WxLxH.	Pallet: Q.ty	Pallet: Weight.
HA350						
HA355						
HA360						
HA365						
HA370						
HA375						
HA380						

Certificates	Manufacturer	Sectors
DM174-2004 CE	**MWG**	Commercial, Industrial

Industrial Flanged Multilamp U.V. Sterilizers FC-D Series

- To be used for industrial water disinfection systems;
- Multilamp U.V. sterilizer with polished AISI 304 sterilizing chamber with inspection window and drain connection;
- Electric box with electronic circuit, connection cable, operating time meter and switch;
- Operating and service/failure led;
- Lamp quartz sheath;
- Max operating pressure 7 bar;
- Temperature 2 ÷ 40°C;
- Power supply 230 V – 50 Hz;
- Irradiation > 40 mJ/cm2;
- Lamp life 10.000 hours;
- Protection class IP43;
- Possibility of connection with
- Shut down solenoid valve;
- Horizontal installation.

Ref	Description	Fam.	Subfam.		
HA400	MWG UV STERILIZER FC-70D 220V-50HZ 2x100W - DN50	55	252		
HA410	MWG UV STERILIZER FC-120D 220V-50HZ 3x120W - DN65	55	252		
HA420	MWG UV STERILIZER FC-180D 220V-50HZ 5x120W - DN80	55	252		
HA430	MWG UV STERILIZER FC-250D 220V-50HZ 7x120W - DN100	55	252		

Ref	AISI	Max flow (l/h)	N. Lamps	Power (w)	Connect.	Diameter (mm)	Lenght (mm)
HA400	304	15.900	2	200	DN50 Flangiated	220	1.250
HA410	304	27.250	3	360	DN65 Flangiated	273	1.250
HA420	304	40.880	5	600	DN80 Flangiated	323	1.250
HA430	304	56.780	7	840	DN100 Flangiated	400	1.250

Ref	Box: WxLxH.	Box: Q.ty	Box: Weight.	Pallet: WxLxH.	Pallet: Q.ty	Pallet: Weight.
HA400						
HA410						
HA420						
HA430						

Certificates	Manufacturer	Sectors
DM174-2004 CE	**MWG**	Industrial

U.V. Sterilizers HR - PC - W - FC - FC/D Spare Parts

Ref	Description	Fam.	Subfam.		
HA500	UV LAMP - T5L10W D=18 L=219 MM	55	255		
HA502	UV LAMP - T5L15W D=18 L=310 MM	55	255		
HA504	UV LAMP - T5L21W D=18 L=444 MM	55	255		
HA506	UV LAMP - T5L29W D=18 L=630 MM	55	255		
HA508	UV LAMP - T5L40W D=18 L=850 MM	55	255		
HA510	UV LAMP - T5L65W D=18 L=850 MM	55	255		
HA512	UV LAMP - T5L85W D=23 L=850 MM	55	255		
HA514	UV LAMP - T6L100W D=23 L=1160 MM	55	255		
HA516	UV LAMP - T6L120W D=18 L=1150 MM	55	255		
HA530	QUARZ FOR UV LAMP - T5L10W D.24,5 X L. 250 MM ONEOPEN END	55	255		
HA531	QUARZ FOR UV LAMP - T5L10W D.24,5 X L. 250 MM	55	255		
HA532	QUARZ FOR UV LAMP - T5L15W D.24,5 X L.350 MM	55	255		
HA534	QUARZ FOR UV LAMP - T5L21W D.24,5 X L.530 MM	55	255		
HA536	QUARZ FOR UV LAMP - T5L29W D.24,5 X L.680 MM	55	255		
HA538	QUARZ FOR UV LAMP - T5L40-65W D.24,5 X L.910 MM	55	255		
HA540	QUARZ FOR UV LAMP - T5L85W D.30,0 X L.910 MM	55	255		
HA542	QUARZ FOR UV LAMP - T6L100-120W D.30,0 X L.1205 M	55	255		
HA550	SILICONE O-RING FOR QUARTZ SHEATH D.24,5 MM	55	255		
HA550A	VITON O-RING FOR QUARTZ SHEATH D. 24,5 MM	55	255		
HA552A	VITON O-RING FOR QUARTZ SHEATH D. 30,0 MM	55	255		
HA560	MWG ELECTRONIC BALLAST UVC-1021,230V 50-60HZ FOR LAMP 10-21W	55	255		
HA562	MWG ELECTRONIC BALLAST UVC-2040,230V 50-60HZ FOR LAMP 29- 40W	55	255		
HA563	MWG ELECTRONIC BALLAST UVC-2040,230V 50-60HZ INSIDE Q.E. FOR LAMP 29-40W	55	255		
HA564	MWG ELECTRONIC BALLAST UVC-6585,230V 50-60HZ INSIDE Q.E. FOR LAMP 65-80W	55	255		
HA566	MWG ELECTRONIC BALLAST UV12 100-240 V/50HZ 90-155W SINGLE-LAMP	55	255		
HA570	MWG COMPLETE CONTROL BOX FC-8-12	55	255		
HA572	MWG COMPLETE CONTROL BOX FC-15-20-24	55	255		
HA574	MWG COMPLETE COMTROL BOX FC-35/45	55	255		
HA576	MWG COMPLETE CONTROL BOX FC-70D	55	255		
HA578	MWG COMPLETE CONTROL BOX FC-180D	55	255		
HA579	COMPLETE CONTROL BOX FC-250D	55	255		
HA590	PLASTIC END CAP FOR FIXING SHEATH FITTING D.30	55	255		
HA556	ELBOW FITTING PP 1/4″ FNTP X 1/4″ TUBE	55	255		
HA558	FIXING SHEATH FITTING D.30 MM AISI 304	55	255		
HA559	END CONNECTION NUT FOR W TYPE UV INCLUDED BLACK PLASTIC CAP	55	255		

U.V. Sterilizers HR - PC - W - FC - FC/D Spare Parts

Ref	Sterilizers UV
HA500	HR-60 PC-1
HA502	W-180
HA504	W-360
HA506	W-480 FC-8
HA508	W-720 FC-12
HA510	FC-15 FC-20
HA512	FC-24
HA514	FC-35 2x FC-70D
HA516	FC-45 3x FC-120D 5x FC-180D 7x FC-250D
HA530	HR-60
HA531	PC-1
HA532	W-180
HA534	W-360
HA536	W-480 FC-8
HA538	W-720 FC-12 FC-15
HA540	FC-20 FC-24
HA542	FC-35 FC-45 2x FC-70D 3x FC-120D 5x FC-180D 7x FC-250D
HA550	HR-60 PC-1 W-180 W-360 W-480 W-720
HA550A	FC-8 FC-12 FC-15
HA552A	FC-20 FC-24 FC-35 FC-45 FC-70D FC-120D FC-180D FC-250D
HA560	HR-60 PC-1 W-180 W-360
HA562	W-480 W-720
HA563	FC-8 FC-12
HA564	FC-15 FC-20 FC-24
HA566	FC-35 FC-45 FC-70D FC-120D FC-180D FC-250D
HA570	FC-8 FC-12
HA572	FC-15 FC-20 FC-24
HA574	FC-35 FC-45
HA576	FC-70D
HA578	FC-180D
HA579	FC-250D
HA590	W-180 W-360 W-480 W-720 FC-8 FC-12 FC-15 FC-20 FC-24 FC-35 FC-45 FC-70D FC-120D FC-180D FC-250D
HA556	HR-60 PC-1
HA558	FC-20 FC-24 FC-35 FC-45 FC-70D FC-120D FC-180D FC-250D
HA559	W-180 W-360 W-480 W-720

EUROTROL®
WATER TREATMENT COMPONENTS

Filter housings, cartridges and polyphosphate feeders MWG

Back to index

PP String Wound Filtering Cartridges

- string wound filtering cartridges with core;
- string and core in polypropylene;
- double/triple retention capacity than a compact structure cartridge;
- dimensions external diameter 60 mm, internal diameter 28 mm;
- nominal length 10” or 20”;
- suggested filtering flow rate for 10” length: 18÷24 lpm;
- max filtering flow rate for 20” length : 30 lpm;
- max ΔP recommended 1 bar;
- max operating temperature = 60°C.

Ref	Description	Fam.	Subfam.		
FC100	MWG STRING WOUND CARTRIDGE DLSW-10-01 (9-7/8″)	40	100		
FC101	MWG STRING WOUND CARTRIDGE DLSW-10-05 (9-7/8″)	40	100		
FC102	MWG STRING WOUND CARTRIDGE DLSW-10-10 (9-7/8″)	40	100		
FC103	MWG STRING WOUND CARTRIDGE DLSW-10-20 (9-7/8″)	40	100		
FC104	MWG STRING WOUND CARTRIDGE DLSW-10-50 (9-7/8″)	40	100		
FC105	MWG STRING WOUND CARTRIDGE DLSW-10-100 (9-7/8″)	40	100		
FC110	MWG STRING WOUND CARTRIDGE DLSW-20-01	40	100		
FC111	MWG STRING WOUND CARTRIDGE DLSW-20-05	40	100		
FC112	MWG STRING WOUND CARTRIDGE DLSW-20-10	40	100		
FC113	MWG STRING WOUND CARTRIDGE DLSW-20-20	40	100		
FC114	MWG STRING WOUND CARTRIDGE DLSW-20-50	40	100		
FC115	MWG STRING WOUND CARTRIDGE DLSW-20-100	40	100		

Ref	Lenght Nominal (inch)	Lenght (mm)	(micron)
FC100	10"	251	1
FC101	10"	251	5
FC102	10"	251	10
FC103	10"	251	20
FC104	10"	251	50
FC105	10"	251	100
FC110	20"	505	1
FC111	20"	505	5
FC112	20"	505	10
FC113	20"	505	20
FC114	20"	505	50
FC115	20"	505	100

Certificates	Manufacturer	Sectors
DM174-2004	**MWG**	Domestic, Commercial, Industrial

Melt Blown Filtering Cartridges

- Thermowelded polypropylene fibers cartridges with no lubricants or antistatic additives;
- Any migration into the filtered water;
- Wide chemical compatibility;
- High retention capacity & filtration efficiency multilayer structure;
- Filtration efficiency 96 % minimum;
- High retention capacity extends cartridge life;
- External diameter 63 mm, internal 28 mm;
- Nominal length: 10” – 20” – 30” – 40”.
- Suggested filtration flow rate for 10” length: 15 ÷ 20 lpm;
- Max filtration flow rate for 40” length: 60 lpm;
- Max ΔP recommended 1,4 bar;
- Max operating temperature = 80°C.

Ref	Description	Fam.	Subfam.		
FC050	MELT BLOWN CARTRIDGE DLPP-01-10 (9.7/8˝)	40	100		
FC051	MELT BLOWN CARTRIDGE DLPP-05-10 (9.7/8˝)	40	100		
FC052	MELT BLOWN CARTRIDGE DLPP-10-10 (9.7/8˝)	40	100		
FC053	MELT BLOWN CARTRIDGE DLPP-20-10 (9.7/8˝)	40	100		
FC054	MELT BLOWN CARTRIDGE DLPP-30-10 (9.7/8˝)	40	100		
FC055	MELT BLOWN CARTRIDGE DLPP-50-10 (9.7/8˝)	40	100		
FC060	MELT BLOWN CARTRIDGE DLPP-01-20	40	100		
FC061	MELT BLOWN CARTRIDGE DLPP-05-20	40	100		
FC062	MELT BLOWN CARTRIDGE DLPP-10-20	40	100		
FC063	MELT BLOWN CARTRIDGE DLPP-20-20	40	100		
FC064	MELT BLOWN CARTRIDGE DLPP-30-20	40	100		
FC065	MELT BLOWN CARTRIDGE DLPP-50-20	40	100		
FC070	MELT BLOWN CARTRIDGE DLPP-01-30	40	100		
FC071	MELT BLOWN CARTRIDGE DLPP-05-30	40	100		
FC072	MELT BLOWN CARTRIDGE DLPP-10-30	40	100		
FC073	MELT BLOWN CARTRIDGE DLPP-20-30	40	100		
FC074	MELT BLOWN CARTRIDGE DLPP-30-30	40	100		
FC075	MELT BLOWN CARTRIDGE DLPP-50-30	40	100		
FC080	MELT BLOWN CARTRIDGE DLPP-01-40	40	100		
FC081	MELT BLOWN CARTRIDGE DLPP-05-40	40	100		
FC082	MELT BLOWN CARTRIDGE DLPP-10-40	40	100		
FC083	MELT BLOWN CARTRIDGE DLPP-20-40	40	100		
FC084	MELT BLOWN CARTRIDGE DLPP-30-40	40	100		
FC085	MELT BLOWN CARTRIDGE DLPP-50-40	40	100		

Melt Blown Filtering Cartridges

Ref	Nominal Lenght (inch)	Lenght (mm)	Micron
FC050	10"	251	1
FC051	10"	251	5
FC052	10"	251	10
FC053	10"	251	20
FC054	10"	251	30
FC055	10"	251	50
FC060	20"	505	1
FC061	20"	505	5
FC062	20"	505	10
FC063	20"	505	20
FC064	20"	505	30
FC065	20"	505	50
FC070	30"	764	1
FC071	30"	764	5
FC072	30"	764	10
FC073	30"	764	20
FC074	30"	764	30
FC075	30"	764	50
FC080	40"	1018	1
FC081	40"	1018	5
FC082	40"	1018	10
FC083	40"	1018	20
FC084	40"	1018	30
FC085	40"	1018	50

Box: WxLxH	Box: Q.ty	Box: Weight	Pallet: WxLxH	Pallet: Q.ty	Pallet: Weight

Certificates	Manufacturer	Sectors
DM174-2004		Domestic, Commercial, Industrial

PP Big Sediment Filter Cartridges

- melt-blown polypropylene fibers;
- dimensions 114 mm external diameter;
- dimensions 28 mm internal diameter.

Ref	Description	Fam.	Subfam.		
FA038	MELT BLOWN CARTRIDGE BIG DLPPBB-01-10 (9.7/8″)	40	105		
FA034	MELT BLOWN CARTRIDGE BIG DLPPBB-05-10 (9.7/8″)	40	105		
FA035	MELT BLOWN CARTRIDGE BIG DLPPBB-20-10 (9.7/8″)	40	105		
FA036	MELT BLOWN CARTRIDGE BIG DLPPBB-50-10 (9.7/8″)	40	105		
FA039	MELT BLOWN CARTRIDGE BIG DLPPBB-01-20	40	105		
FA028	MELT BLOWN CARTRIDGE BIG DLPPBB-05-20	40	105		
FA029	MELT BLOWN CARTRIDGE BIG DLPPBB-20-20	40	105		
FA037	MELT BLOWN CARTRIDGE BIG DLPPBB-50-20	40	105		

Ref	Nominal Lenght (inch)	Lenght (mm)	Micron
FA038	10"	251	1
FA034	10"	251	5
FA035	10"	251	20
FA036	10"	251	50
FA039	20"	508	1
FA028	20"	508	5
FA029	20"	508	20
FA037	20"	508	50

Box: WxLxH	Box: Q.ty	Box: Weight	Pallet: WxLxH	Pallet: Q.ty	Pallet: Weight

Certificates	Manufacturer	Sectors
DM174-2004		Domestic, Commercial, Industrial

Purtrex Filtering Cartridges

- in melt-blown polypropylene fibers;
- any microfibers migration in filtered water;
- graduated density from external to internal side improves filter efficiency;
- high retention capacity extends cartridge life;
- external diameter 63 mm, internal 28 mm;
- nominal length 10” – 20” – 30” – 40”.
- suggested filtration flow rate for 10” length: 15 ÷ 20 lpm;
- max filtration flow rate for 40” length: 60 lpm;
- max operating temperature = 80°C.

Ref	Description	Fam.	Subfam.		
FC010	PURTREX CARTRIDGE PX01-9.7/8″	40	100		
FC011	PURTREX CARTRIDGE PX03-9.7/8″	40	100		
FC012	PURTREX CARTRIDGE PX05-9.7/8″	40	100		
FC013	PURTREX CARTRIDGE PX10-9.7/8″	40	100		
FC014	PURTREX CARTRIDGE PX20-9.7/8″	40	100		
FC015	PURTREX CARTRIDGE PX30-9.7/8″	40	100		
FC016	PURTREX CARTRIDGE PX50-9.7/8″	40	100		
FC017	PURTREX CARTRIDGE PX75-9.7/8″	40	100		
FC020	PURTREX CARTRIDGE PX01-20″	40	100		
FC021	PURTREX CARTRIDGE PX03-20″	40	100		
FC022	PURTREX CARTRIDGE PX05-20″	40	100		
FC023	PURTREX CARTRIDGE PX10-20″	40	100		
FC024	PURTREX CARTRIDGE PX20-20″	40	100		
FC025	PURTREX CARTRIDGE PX30-20″	40	100		
FC026	PURTREX CARTRIDGE PX50-20″	40	100		
FC030	PURTREX CARTRIDGE PX01-30″	40	100		
FC031	PURTREX CARTRIDGE PX03-30″	40	100		
FC032	PURTREX CARTRIDGE PX05-30″	40	100		
FC033	PURTREX CARTRIDGE PX10-30″	40	100		
FC034	PURTREX CARTRIDGE PX20-30″	40	100		
FC035	PURTREX CARTRIDGE PX30-30″	40	100		
FC036	PURTREX CARTRIDGE PX50-30″	40	100		
FC040	PURTREX CARTRIDGE PX01-40″	40	100		
FC041	PURTREX CARTRIDGE PX03-40″	40	100		
FC042	PURTREX CARTRIDGE PX05-40″	40	100		
FC043	PURTREX CARTRIDGE PX10-40″	40	100		
FC044	PURTREX CARTRIDGE PX20-40″	40	100		
FC045	PURTREX CARTRIDGE PX30-40″	40	100		
FC046	PURTREX CARTRIDGE PX50-40″	40	100		

Purtrex Filtering Cartridges

Ref	Nominal Lenght (inch)	Length (mm)	Micron
FC010	10"	251	1
FC011	10"	251	3
FC012	10"	251	5
FC013	10"	251	10
FC014	10"	251	20
FC015	10"	251	30
FC016	10"	251	50
FC017	10"	251	75
FC020	20"	508	1
FC021	20"	508	3
FC022	20"	508	5
FC023	20"	508	10
FC024	20"	508	20
FC025	20"	508	30
FC026	20"	508	50
FC030	30"	764	1
FC031	30"	764	3
FC032	30"	764	5
FC033	30"	764	10
FC034	30"	764	20
FC035	30"	764	30
FC036	30"	764	50
FC040	40"	1018	1
FC041	40"	1018	3
FC042	40"	1018	5
FC043	40"	1018	10
FC044	40"	1018	20
FC045	40"	1018	30
FC046	40"	1018	50

Box: WxLxH	Box: Q.ty	Box: Weight	Pallet: WxLxH	Pallet: Q.ty	Pallet: Weight

Certificates	Manufacturer	Sectors
FDA21 NSF42		Domestic, Commercial, Industrial

Activated Carbon Filtering Cartridges

Carbon Block End Cap 70

- Extruded activated carbon of Bituminous origin;
- Recommended for pre-filtration applications and for Chlorine removal;
- Dimensioni: external diameter = 64 mm; internal diameter = 28 mm; end-cap diameter = 70 mm.

Ref	Description	Fam.	Subfam.		
FA012	CARBON BLOCK CARTRIDGE CBC 5″ CTO 1 MICRON	40	105		
FA013	CARBON BLOCK CARTRIDGE EB-CB -9″7/8 CTO 10 MICRON	40	105		
FA014	CARBON BLOCK CARTRIDGE CBC 20″ CTO 10 MICRON	40	105		

Ref	Nominal Lenght (inch)	Lenght (mm)	Microns	Suggested Flow Rate (l/h)	CAP
FA012	5"	124	1	120	White
FA013	10"	250	10	240	White
FA014	20"	508	10	480	White

Box: WxLxH	Box: Q.ty	Box: Weight	Pallet: WxLxH	Pallet: Q.ty	Pallet: Weight

Certificates	Manufacturer	Sectors
DM174-2004		Domestic, Commercial, Industrial

Carbon Block End Cap 65

- Extruded activated carbon of Bituminous origin;
- Recommended for pre-filtration applications and for Chlorine removal;
- Dimensions: external diameter = 62 mm; internal diameter = 30 mm; end-cap diameter = 65 mm.

Ref	Description	Fam.	Subfam.		
FA018	CARBON BLOCK CARTRIDGE 10″ CTO 10 MICRON END CAP65	40	105		
FA019	CARBON BLOCK CARTRIDGE 20″ CTO 10 MICRON END CAP65	40	105		

Ref	Nominal Lenght (inch)	Lenght (mm)	Micron	Suggested Flow Rate(l/h)	CAP
FA018	10"	249	10	240	White
FA019	20"	508	10	480	White

Box: WxLxH	Box: Q.ty	Box: Weight	Pallet: WxLxH	Pallet: Q.ty	Pallet: Weight

Certificates	Manufacturer	Sectors
DM174-2004		Domestic, Commercial, Industrial

Activated Carbon Filtering Cartridges

Big Carbon Block

- Bituminous carbon block.
- Suitable for pre-filtration applications and for Chlorine removal.
- Dimensions: external diameter = 108 mm (4 ¼”); internal diameter = 25 mm (1) ; end-cap diameter = 113 mm.

Ref	Description	Fam.	Subfam.		
FA016	CARBON BLOCK CARTRIDGE CBC 10″BIG CTO 5 MICRON	40	105		
FA015	CARBON BLOCK CARTRIDGE CBC 20″BIG CTO 5 MICRON	40	105		

Ref	Nominal Length (inch)	Length (mm)	Micron	Suggested Flow Rate(l/h)
FA016	10"	254	5	800
FA015	20"	508	5	1600

Box: WxLxH	Box: Q.ty	Box: Weight	Pallet: WxLxH	Pallet: Q.ty	Pallet: Weight

Certificates	Manufacturer	Sectors
DM174-2004		Domestic, Commercial, Industrial

Granular activated carbon

- PE container cartridge empty or with granular activated carbon;
- external diameter 72 mm;
- nominal length 10”;
- length 256 mm.

Ref	Description	Fam.	Subfam.		
FA007	GAC CARTRIDGE 10N 9″7/8 VEGETAL	40	105		
FA008	EMPTY CARTRIDGE 10N 9″ 7/8	40	105		

Box: WxLxH	Box: Q.ty	Box: Weight	Pallet: WxLxH	Pallet: Q.ty	Pallet: Weight

Certificates	Manufacturer	Sectors
		Domestic, Commercial, Industrial

DOE Polyester Filtering Cartridges for MT, MD & OTS Housings

- Washable, with filtration degree 50 micron;
- External diameter 70 mm, internal 30 mm;
- Max operating temperature 45°C.

Ref	Description	Fam.	Subfam.		
FARP1050	MWG 10″ CARTRIDGE POLYESTER WASHABLE NET 50 MICRON	40	105		
FARP2050	MWG 20″ CARTRIDGE POLYESTER WASHABLE NET 50 MICRON	40	105		

Ref	Nominal Lenght (inch)	Lenght (mm)
FARP1050	10"	250
FARP2050	20"	505

Box: WxLxH	Box: Q.ty	Box: Weight	Pallet: WxLxH	Pallet: Q.ty	Pallet: Weight

Certificates	Manufacturer	Sectors
DM174-2004 ACS	**MWG**	Domestic

DOE Nylon Filtering Cartridges for OTS Housings

- Washable, with filtration degree 60 micron;
- External diameter 62 mm, internal 27 mm.

Ref	Description	Fam.	Subfam.		
FA067	WASHABLE CARTRIDGE NYLON NL 60-9	40	105		
FA068	WASHABLE NYLON CARTRIDGE NL 60-20	40	105		

Ref	Nominal Lenght (pollici)	Lenght (mm)
FA067	10"	248
FA068	20"	505

Box: WxLxH	Box: Q.ty	Box: Weight	Pallet: WxLxH	Pallet: Q.ty	Pallet: Weight

Certificates	Manufacturer	Sectors
DM174-2004		Domestic, Commercial, Industrial

OR222 Nylon Filtering Cartridges for OTS Housings

- Washable, with filtration degree 60 micron;
- To fit into OTS brass head housings 1 ¼" – 1 ½" – 2" models;
- External diameter 61 mm;
- With 222 O-rings;
- Max ΔP recommended 1,4 bar.

Ref	Description	Fam.	Subfam.		
FB067	WASHABLE NYLON CARTRIDGE 60 MICRON OTS 10″ - OR22	40	105		
FB068	WASHABLE CARTRIDGE NYLON 60 MICRON OTS 20″ - OR22	40	105		

Ref	Nominal Lenght (inch)	Lenght (mm)	Flow Δp=0,2 bar (l/h)
FB067	10"	250	1800
FB068	20"	505	3600

Box: WxLxH	Box: Q.ty	Box: Weight	Pallet: WxLxH	Pallet: Q.ty	Pallet: Weight

Certificates	Manufacturer	Sectors
DM174-2004 ACS		Domestic, Commercial

AISI 316 Filtering DOE Cartridges for Hot Water

- Washable and suitable for MWG Hot Water Filter Housings on catalog;
- Dimensions external diameter 70 mm, internal 30 mm;
- Nominal Length 10” (= 250 mm) and 20" (= 505 mm);
- Range temperature 4 - 80°C.

Ref	Description	Fam.	Subfam.		
FAAP1050	MWG AISI 316 PLEATED CARTRIDGE 10″-50 MICRON	40	105		
FAAL1070	MWG AISI 316 SMOOTH CARTRIDGE 10″-70 MICRON	40	105		
FAAP2050	MWG AISI 316 PLEATED CARTRIDGE 20″ - 50 MICRON	40	105		
FAAL2070	MWG AISI 316 SMOOTH CARTRIDGE L=20″-70 MICRON	40	105		

Box: WxLxH	Box: Q.ty	Box: Weight	Pallet: WxLxH	Pallet: Q.ty	Pallet: Weight

Certificates	Manufacturer	Sectors
DM174-2004 ACS	**MWG**	Domestic, Commercial, Industrial

Wound Polypropylene Cartridge with AISI 316 Core for Hot Water Filters

- To install with our Hot Water Filters on catalogue;
- dimensions external diameter 60 mm, internal 27 mm;
- length 250 mm, nominal length 10”;
- max operating temperature 80°C.

Ref	Description	Fam.	Subfam.		
FA071	MWG STRING WOUND CARTRIDGE AISI 316 CORE DLSW5-975	40	105		
FA072	MWG STRING WOUND CARTRIDGE AISI316 CORE DLSW10-975	40	105		
FA073	MWG STRING WOUND CARTRIDGE AISI316 CORE DLSW20-975	40	105		
FA074	MWG STRING WOUND CARTRID. AISI316 CORE DLSW50-975E	40	105		

Ref	Description	Micron
FA071	MWG STRING WOUND CARTRIDGE AISI 316 CORE DLSW5-975	5
FA072	MWG STRING WOUND CARTRIDGE AISI316 CORE DLSW10-975	10
FA073	MWG STRING WOUND CARTRIDGE AISI316 CORE DLSW20-975	20
FA074	MWG STRING WOUND CARTRID. AISI316 CORE DLSW50-975E	50

Certificates	Manufacturer	Sectors
DM174-2004	**MWG**	Domestic, Commercial, Industrial

Filtering Cartridges

Empty Cartridges

- plastic empty cartridge;
- external diameter 70 mm;
- useful to fill with polyphosphate crystals – activated carbon - resins.

Ref	Description	Fam.	Subfam.		
FAVP10	MWG EMPTY CARTRIDGE 10″	40	105		
FAVP20	MWG EMPTY CARTRIDGE 20″	40	105		

Ref	Nominal Lenght (inch)	Lenght (mm)	Volume (Liters)
FAVP10	10"	252	0,6
FAVP20	20"	510	1,2

Box: WxLxH	Box: Q.ty	Box: Weight	Pallet: WxLxH	Pallet: Q.ty	Pallet: Weight

Certificates	Manufacturer	Sectors
DM174-2004	**MWG**	Domestic

Anti-scale Cartridges with Polyphosphate Crystals.

- Plastic cartridge;
- External diameter 70 mm;
- Shipped with polyphosphate crystals 10 ÷ 20 mm;
- Maximum temperature = 35°C;
- Maximum total hardness = 50°f (500 ppm $CaCO_3$) ;
- The polyphosphate complies with the standard UNI EN 1208:2005.

Ref	Description	Fam.	Subfam.		
FAPP1012	MWG 10″ CARTRIDGE WITH 10-20 MM POLYPH. CRYSTALS	40	105		
FAPP2012	MWG 10″ CARTRIDGE WITH 10-20 MM POLYPH. CRYSTALS	40	105		

Ref	Nominal Lenght (inch)	Lenght (mm)
FAPP1012	10"	252
FAPP2012	20"	510

Box: WxLxH	Box: Q.ty	Box: Weight	Pallet: WxLxH	Pallet: Q.ty	Pallet: Weight

Certificates	Manufacturer	Sectors
	MWG	Domestic, Commercial, Industrial

PP Melt Blown 5” Filtering Cartridge

- melt blown polypropylene fibers cartridge; dimensions external diameter 64 mm, internal 25 mm.

Ref	Description	Fam.	Subfam.		
FA021	IN FIBER CARTRIDGE PP 5″ SED 5 MICRON	40	105		

Ref	Nominal Lenght (inch)	Lenght (mm)	Micron
FA021	5"	126	5

Box: WxLxH	Box: Q.ty	Box: Weight	Pallet: WxLxH	Pallet: Q.ty	Pallet: Weight

Certificates	Manufacturer	Sectors
		Domestic, Commercial, Industrial

MM Mini Three Pieces Filter Housings

- Made in European Union (Italy);
- Suitable for MINI filtering cartridges 5” length;
- Head and nut material ABS blue colour;
- IN/OUT connections ½” with brass inserts;
- Sump in SAN clear and O-ring in EPDM material;
- Max operating pressure 8 bar;
- Temperature range = 4 ÷ 45°C.

Ref	Description	Fam.	Subfam.		
FBMM0505T	MWG MINI FILETR HOUSING 1/2″ - L=5″ CLEAR BOWL	40	106		

Box: WxLxH	Box: Q.ty	Box: Weight	Pallet: WxLxH	Pallet: Q.ty	Pallet: Weight

Certificates	Manufacturer	Sectors
DM174-2004 DM25-2012 ACS	**MWG**	Domestic, Commercial

Cartridges to coupling, MINI Wound PP Thread Filtering Cartridge

- Filtering degree 25 micron;
- Dimensions external diameter 45 mm, internal 18 mm;
- Length 5” (= 122 mm).

Ref	Description	Fam.	Subfam.		
FAMM0525	MWG 5″ MINI CARTRIDGE PP WOUND THREAD 25 MICRON	40	105		

Box: WxLxH	Box: Q.ty	Box: Weight	Pallet: WxLxH	Pallet: Q.ty	Pallet: Weight

Certificates	Manufacturer	Sectors
DM174-2004 ACS	**MWG**	Domestic

Washable MINI Filtering Cartridge with Net in Polyester

- Washable MINI cartridge in Polyester;
- Filtering degree 50 micron;
- Dimensions external diameter 50 mm, internal 20 mm;
- Length 5” (= 122 mm).

Ref	Description	Fam.	Subfam.		
FAMM0550	MWG 5″ MINI CARTRIDGE POLYESTER WASHABLE NET 50 MICRON	40	105		

Box: WxLxH	Box: Q.ty	Box: Weight	Pallet: WxLxH	Pallet: Q.ty	Pallet: Weight

Certificates	Manufacturer	Sectors
DM174-2004 ACS	**MWG**	Domestic

Accessories

Ref	Description	Fam.	Subfam.		
FBMMR11	MWG PLASTIC SPANNER FOR FILTER MM	40	106		
FBMMR41	MWG DIFFUSER TUBE 5″ FOR FILTER MM	40	106		
FBMDR31	MWG PLASTIC NIPPLE 3/4″ BSPP W/O-RING FOR FILTER MD/MM/MT	40	106		

Residential Cintropur Filters

- range of filters for drinking water entirely made in synthetic material;
- the particular centrifugal effect causes the precipitation of larger particles, while the final filtration is assured by the filter sleeve;
- the filters include the sleeve at 25 micron;
- also available sleeves at 1, 10, 50 and 100 micron as spare parts;
- wrench and two complete connections included;
- max operating pressure 10 bar;
- max operating temperature 50°C.

Ref	Description	Fam.	Subfam.		
FB400	FILTER CINTROPUR NW18-3/4″ - 25 MICRON	40	113		
FB401	FILTER CINTROPUR NW 25-3/4″ - 25 MICRON	40	113		
FB402	FILTER CINTROPUR NW 25-1″ - 25 MICRON	40	113		
FB403	FILTER CINTROPUR NW 32-1″1/4 - 25 MICRON	40	113		

Ref	Connections	Flow m³/h Δp 0,2 bar	Height (mm)	Width (mm)
FB400	¾"	3,5	240	270
FB401	¾"	5,5	355	270
FB402	1"	5,5	355	270
FB403	1 ¼"	6,5	540	270

Box: WxLxH	Box: Q.ty	Box: Weight	Pallet: WxLxH	Pallet: Q.ty	Pallet: Weight

Certificates	Manufacturer	Sectors
DM174-2004 ACS	Cintropur	Domestic, Commercial

Accessories and spare parts

Ref	Description	Fam.	Subfam.		
FB470	SPANNER NW18/25/32 REF. 21	40	112		
FB472	MANOMETER 1/8″ SCALE 0-10 BAR NW 18/25/32 REF 23	40	112		
FB473	SINGLE PP MOUNTING BRACKET NW18/25/32 REF. 24	40	112		
FB444	N. 5 SPARE SLEEVES KIT 1 MICRON NW 25	40	112		
FB426	N. 5 SPARE SLEEVES KIT 10 MICRONS NW 25	40	112		
FB427	N. 5 SPARE SLEEVES KIT 25 MICRONS NW 25	40	112		
FB428	N. 5 SPARE SLEEVES KIT 50 MICRONS NW 25	40	112		
FB429	N. 5 SPARE SLEEVES KIT 100 MICRONS NW 25	40	112		
FB445	N. 5 SPARE SLEEVES KIT 1 MICRON NW 32	40	112		
FB433	N. 5 SPARE SLEEVES KIT 25 MICRONS NW 32	40	112		
FB434	N. 5 SPARE SLEEVES KIT 50 MICRONS NW 32	40	112		
FB435	N. 5 SPARE SLEEVES KIT 100 MICRONS NW 32	40	112		

Commercial Cintropur Filters

- range of filters for drinking water entirely made in synthetic material;
- the particular centrifugal effect causes the precipitation of larger particles, while the final. filtration is assured by the filter sleeve;
- the filters include the sleeve at 25 micron;
- also available sleeves at 1, 5, 10, 50, 100, 150 and 300 micron as spare parts;
- wrench, pressure gauge and drain cock included;
- max operating pressure 10 bar;
- max pressure 16 bar;
- max operating temperature 50°C.

Ref	Description	Fam.	Subfam.		
FB404	FILTER CINTROPUR NW 280-1″ - 25 MICRON	40	113		
FB405	FILTER CINTROPUR NW 340-1″1/4 - 25 MICRON	40	113		
FB406	FILTER CINTROPUR NW 400-1,5″ - 25 MICRON	40	113		

Ref	Flow m3/h Δp 0,2 bar	Weight (kg)	Connections	Ø Pipe	Total Width (mm)	Total Height (mm)
FB404	7	2,2	1" BSPT	1"	284	472
FB405	10	2,7	1¼"BSPT	1 ¼"	284	573
FB406	12	2,9	1½"BSPT	1 ½"	284	675

Box: WxLxH	Box: Q.ty	Box: Weight	Pallet: WxLxH	Pallet: Q.ty	Pallet: Weight

Certificates	Manufacturer	Sectors
DM174-2004 ACS	Cintropur	Commercial

Filter housings, cartridges and polyphosphate feeders

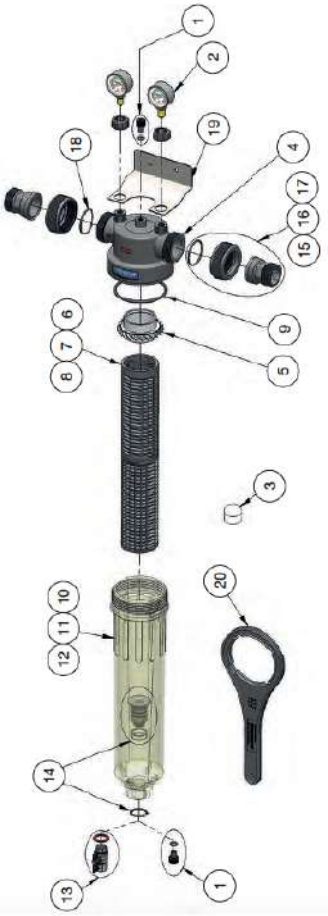

Rif.	Ref	Description	Fam.	Subfam.		
7	FB453C	NW340 PVC FILTERING SUPPORT ARMOR	40	112		
20	FB479C	NW280-340-400 WRENCH	40	112		
Not sh.	FB437C	N. 5 SPARE SLEEVES KIT 5 MICRON NW 280	40	112		
Not sh.	FB440C	N. 5 SPARE SLEEVES KIT 50 MICRON NW 280	40	112		
Not sh.	FB440D	N. 5 SPARE SLEEVES KIT 50 MICRON NW 340	40	112		
Not sh.	FB441D	N. 5 SPARE SLEEVES KIT 100 MICRON NW 340	40	112		
Not sh.	FB443D	N. 5 SPARE SLEEVES KIT 300 MICRON WASHABLE NW 340	40	112		
Not sh.	FB439E	N. 5 SPARE SLEEVES KIT 25 MICRON NW 400	40	112		
Not sh.	FB440E	N. 5 SPARE SLEEVES KIT 50 MICRON NW 400	40	112		
Not sh.	FB441E	N. 5 SPARE SLEEVES KIT 100 MICRON NW 400	40	112		

Filter housings, cartridges and polyphosphate feeders

Industrial Cintropur Filters

- range of filters for drinking water entirely made in synthetic material;
- the particular centrifugal effect causes the precipitation of larger particles, while the final filtration is assured by the filter sleeve;
- the filters include the sleeve at 25 micron;
- also available sleeves at 5, 10, 50, 100, 150 and 300 micron as spare parts;
- wrench, pressure gauge and drain cock included;
- max operating pressure 10 bar;
- max pressure 16 bar;
- max operating temperature 50°C.

Ref	Description	Fam.	Subfam.		
FB408A	FILTER CINTROPUR NW 500-2″ - 25 MICRON	40	113		
FB408TE	FILTER CINTROPUR NW 500 - 2″ - TE	40	113		
FB409A	FILTER CINTROPUR NW 650-2″1/2 - 25 MICRON	40	113		
FB410A	FILTER CINTROPUR NW 800-3″ - 25 MICRON	40	113		

Ref	Flow m³/h con Δp 0,2 bar	Weight (kg)	Connections	Ø Pipe	Total Height (mm)	Total Width (mm)
FB408A	18	6,4	2" BSPT	2"	363	770
FB408TE	2	6,4	2" BSPT	2"	363	770
FB409A	25	7,0	DN65	2 ½"	304	770
FB410A	32	7,4	DN80	3"	313	770

Box: WxLxH	Box: Q.ty	Box: Weight	Pallet: WxLxH	Pallet: Q.ty	Pallet: Weight

Certificates	Manufacturer	Sectors
DM174-2004 ACS	Cintropur	Commercial, Industrial

Industrial Cintropur Filters

Spare Parts and Accessories

Rif. N.	Ref	Description	Fam.	Subfam.		
53	FB484A	SUPPORT ARMOR NW500/650/800 REF.53	40	112		
62	FB479	SPANNER NW500/650/800 REF. 62	40	112		
Not shown	FB437	N. 5 SPARE SLEEVES KIT 5 MICRONS NW 50/62/75/500/650/800	40	112		
Not shown	FB438	N. 5 SPARE SLEEVES KIT 10 MICRONS NW 50/62/75/500/650/800	40	112		
Not shown	FB439	N. 5 SPARE SLEEVES KIT 25 MICRONS NW 50/62/75/500/650/800	40	112		
Not shown	FB440	N. 5 SPARE SLEEVES KIT 50 MICRONS NW 50/62/75/500/650/800	40	112		
Not shown	FB441	N. 5 SPARE SLEEVES KIT 100 MICRONS NW 50/62/75/500/650/800	40	112		
Not shown	FB442	N. 5 SPARE SLEEVES KIT WASHABLE 150 MICRONS NW 50/62/75/500/650/800	40	112		
Not shown	FB443	N. 5 SPARE SLEEVES KIT WASHABLE 300 MICRONS NW 50/62/75/500/650/800	40	112		

MD Two Pieces Filter Housings IN/OUT connections ¾”

- Made in European Union (Italy);
- Two pieces filter housings for standard filtering cartridges length 5", 10” or 20”;
- Fixable head in material PP reinforced blue colour;
- Sump in PET;
- O-ring in EPDM;
- IN/OUT connections ¾” BSPP F;
- With air valve;
- Max operating pressure 8 bar;
- Temperature 4 ÷ 45°C.

Ref	Description	Fam.	Subfam.		
FBMD0507B	MWG TWO PIECES FILTER HOUSING 3/4″ - L=5″ BLUE BOWL	40	106		
FBMD1007T	MWG TWO PIECES FILTER HOUSING 3/4″ - L=10″ CLEAR BOWL	40	106		
FBMD1007B	MWG TWO PIECES FILTER HOUSING 3/4″ - L=10″ BLUE BOWL	40	106		
FBMD2007T	MWG TWO PIECES FILTER HOUSING 3/4″ - L=20″ CLEAR BOWL	40	106		
FBMD2007B	MWG TWO PIECES FILTER HOUSING 3/4″ - L=20″ BLUE BOWL	40	106		

Ref	Head Dimension (mm)	Total Length (mm)
FBMD0507B	122	185
FBMD1007T	122	325
FBMD1007B	122	325
FBMD2007T	122	577
FBMD2007B	122	577

Box: WxLxH	Box: Q.ty	Box: Weight	Pallet: WxLxH	Pallet: Q.ty	Pallet: Weight

Certificates	Manufacturer	Sectors
DM174-2004 DM25-2012 ACS	**MWG**	Domestic, Commercial

Spare Parts and Accessories

Ref	Description	Fam.	Subfam.		
FBMDR11	MWG PLASTIC SPANNER FOR FILTER MD	40	106		
FBMDR21	MWG BLUE PLASTIC BRACKET WITH SCREWS FOR FILTER MD AND MT	40	106		
FBMDR31	MWG PLASTIC NIPPLE 3/4″ BSPP W/O-RING FOR FILTER MD/MM/MT	40	106		
FBMDR52	BLUE HEAD FOR MD 3/4″ BSPP FILTER HOUSING	40	106		
FBMDR61	MWG BOWL BLUE 10″ FOR MD FILTER HOUSINGS + O-RING	40	106		
FBMDR62	BOWL CLEAR 10″ FOR MD FILTER HOUSINGS + O-RING	40	106		
FBMDR65	BOWL BLUE 20″ FOR MD FILTER HOUSINGS + O-RING	40	106		
FBMDR66	MWG BOWL CLEAR 20″ FOR MD FILTER HOUSINGS + O-RING	40	106		
FBMDR71	MWG O-RING FOR HEAD MD FILTER HOUSINGS	40	106		
FBMDR91	MWG BREATHER-VALVE WITH O-RING FOR HEAD MD FILTER HOUSING	40	106		

BG Plastic BIG Filter Housings

- Made in European Union (Italy);
- Suitable for 4 ½" diameter DOE high flow cartridges;
- Fixable head;
- Material in PP;
- O-ring in EPDM;
- complete with air valve
- Max operating pressure 8,3 bar;
- Temperature 4 ÷ 45°C;
- IN/OUT connections BSPP;
- With plastic wrench (ref. FBBGR11).

Ref	Description	Fam.	Subfam.		
FBBG1010B	MWG FILTER HOUSING BIG L=10″ -1″ BLUE BOWL WITH KEY	40	106		
FBBG1015B	MWG FILTER HOUSING BIG L=10″ 1 1/2″ BLUE BOWL WITH KEY	40	106		
FBBG2010B	MWG FILTER HOUSING BIG L=20″- 1″ BLUE BOWL WITH KEY	40	106		
FBBG2015B	MWG FILTER HOUSING BIG L=20″- 1 1/2″ BLUE BOWL WITH KEY	40	106		

Ref	In/Out Connection (inch)	Head Dimension (mm)	Total Length (mm)
FBBG1010B	1" F	190	360
FBBG1015B	1½" F	190	360
FBBG2010B	1" F	190	617
FBBG2015B	1½" F	190	617

Certificates	Manufacturer	Sectors
DM174-2004 DM25-2012	**MWG**	Domestic, Commercial

Ref	Description	Fam.	Subfam.		
FBBGR11	MWG SPANNER FOR FILTER BG	40	106		

Box: WxLxH	Box: Q.ty	Box: Weight	Pallet: WxLxH	Pallet: Q.ty	Pallet: Weight

Cartridges to coupling

- BIG PP microfiber filtering cartridges;
- BIG CARBON BLOCK filtering cartridges.

Spare Parts and Accessories

Ref	Description	Fam.	Subfam.		
FBBGR11	MWG SPANNER FOR FILTER BG	40	106		
FBBGR21	MWG S.S. PAINTED MOUNTING BRACKET FOR FILTER BG	40	106		
FBBGR31	MWG NR. 2 BRASS NIPPLES 1″ W/O-RING FOR FILTER BG/MT	40	106		
FBBGR51	HEAD FOR BG 1″ FILTER HOUSING	40	112		
FBBGR52	MWG HEAD FOR BG 1 1/2″ FILTER HOUSING	40	112		
FBBGR61	BOWL BLUE 10″ FOR BG FILTER HOUSING	40	112		
FBBGR71	MWG O-RING FOR HEAD BG FILTER HOUSINGS	40	112		

MT Three Pieces Filter Housings

- Made in European Union (Italy);
- Three pieces filter housings for standard filtering cartridges length 10” or 20”;
- Fixable head and nut in material PP reinforced blue colour; Sump in PET; O-ring in EPDM;
- IN/OUT connections BSPP F 1/2", 3/4" or 1”, with brass inserts; With air valve;
- Max operating pressure 8 bar; Temperature 4 ÷ 45°C;
- **WARNING! FA068 cartridge is not suitable for this housing.**

Ref	Description	Fam.	Subfam.		
FBMT1005T	MWG THREE PIECES FILTER HOUSING 1/2″ - L=10″ CLEAR BOWL	40	106		
FBMT1007T	MWG THREE PIECES FILTER HOUSING 3/4″ - L=10″ CLEAR BOWL	40	106		
FBMT1007B	MWG THREE PIECES FILTER HOUSING 3/4″ - L=10″ BLUE BOWL	40	106		
FBMT1010T	MWG THREE PIECES FILTER HOUSING 1″ - L=10″ CLEAR BOWL	40	106		
FBMT1010B	THREE PIECES FILTER HOUSING 1″ - L=10″ BLUE BOWL	40	106		
FBMT2005T	MWG THREE PIECES FILTER HOUSING 1/2″ - L=20″ CLEAR BOWL	40	106		
FBMT2007T	MWG THREE PIECES FILTER HOUSING 3/4″ - L=20″ CLEAR BOWL	40	106		
FBMT2010T	MWG THREE PIECES FILTER HOUSING 1″ - L=20″ CLEAR BOWL	40	106		
FBMT2010B	MWG THREE PIECES FILTER HOUSING 1″ - L=20″ BLUE BOWL	40	106		

Ref	Connections (inch)	Head Dimension (mm)	Total Length (mm)
FBMT1005T	1/2"	133	315
FBMT1007T	3/4"	133	315
FBMT1007B	3/4"	133	315
FBMT1010T	1"	145	321
FBMT1010B	1"	145	321
FBMT2005T	1/2"	133	571
FBMT2007T	3/4"	133	571
FBMT2010T	1"	145	577
FBMT2010B	1"	145	577

Box: WxLxH	Box: Q.ty	Box: Weight	Pallet: WxLxH	Pallet: Q.ty	Pallet: Weight

Certificates	Manufacturer	Sectors
DM174-2004 DM25-2012 ACS	**MWG**	Domestic, Commercial

Spare Parts and Accessories

Ref	Description	Fam.	Subfam.		
FBMTR11	MWG PLASTIC SPANNER FOR FILTER MT	40	106		
FBMTR41	MWG DIFFUSER TUBE 10″ FOR FILTER MT	40	106		
FBMTR51	MWG HEAD FOR MT 3/4″ FILTER HOUSING	40	106		
FBMTR52	MWG HEAD FOR MT 1″ FILTER HOUSING	40	106		
FBMTR61	MWG BOWL BLU 10″ FOR MT FILTER HOUSINGS+O-RING	40	106		
FBMTR62	MWG BOWL CLEAR 10″ FOR MT FILTER HOUSINGS+O-RING	40	106		
FBMTR66	MWG BOWL CLEAR 20″ FOR MT FILTER HOUSINGS + O-RING	40	106		
FBMTR71	MWG O-RING FOR HEAD MT FILTER HOUSINGS	40	106		
FBMTR81	MWG NUT FOR MT FILTER HOUSINGS	40	106		
FBMDR21	MWG BLUE PLASTIC BRACKET WITH SCREWS FOR FILTER MD AND MT	40	106		
FBMDR31	MWG PLASTIC NIPPLE 3/4″ BSPP W/O-RING FOR FILTER MD/MM/MT	40	106		
FBBGR31	MWG NR. 2 BRASS NIPPLES 1″ W/O-RING FOR FILTER BG/MT	40	106		
FBMTR91	MWG BLUE BREATHER-VALVE WITH O-RING FOR HEAD MT FILTER HOUSING	40	106		

MD, DD and TD two Pieces Filter Housings IN/OUT connections ¼” for R.O. Systems

FBMD1002T

FBMD1002W

FBDD1002W

FBTD1002W

- Made in European Union (Italy);
- Suitable for residential R.O. and filtration systems;
- Two pieces filter housings for standard filtering cartridges length 10”
- Total height 325 mm;
- Fixable head (single, double or triplex) in material PP reinforced white colour;
- Sump in PET clear or white, O-ring in EPDM;
- IN/OUT connections 1/4” NPT F;
- With air valve;
- Max operating pressure 8 bar, temperature 4 ÷ 45°C;
- Designed for the following single, double or triple brackets (also ideal for 2 + 1 application), with fixing screws.

Ref	Description	Fam.	Subfam.		
FBMD1002T	MWG TWO PIECES FILTER HOUSING 1/4″ - L=10″ CLEAR BOWL	30	175		
FBMD1002W	MWG TWO PIECES FILTER HOUSING 1/4″ - L=10″ WHITE BOWL	30	175		
FBDD1002W	MWG TWO PIECES TWO FILTER HOUSING L=10″ - 1/4″ WHITE BOWL	30	175		
FBTD1002W	MWG TWO PIECES THREE FILTER HOUSING L=10″ - 1/4″ WHITE BOWL	30	175		

Ref	Cartridge Length (inch)	Head Dimension (mm)
FBMD1002T	Single	122
FBMD1002W	Single	122
FBDD1002W	Duplex	228
FBTD1002W	Triplex	336

Ref	Box: WxLxH.	Box: Q.ty	Box: Weight.	Pallet: WxLxH.	Pallet: Q.ty	Pallet: Weight.
FBMD1002T						
FBMD1002W						
FBDD1002W						
FBTD1002W						

Certificates	Manufacturer	Sectors
DM174-2004 DM25-2012 ACS	**MWG**	Domestic, Commercial

Spare Parts and Accessories

Ref	Description	Fam.	Subfam.		
FBMDR11	MWG PLASTIC SPANNER FOR FILTER MD	40	106		
FBMDR22	MWG WHITE PLASTIC BRACKET WITH SCREWS FOR MD AND MT FILTER HOUSINGS	30	175		
FBMDR24	MWG WHITE BRACKET WITH SCREWS FOR DD AND DT TWO FILTER HOUSINGS	30	175		
FBMDR26	MWG WHITE BRACKET WITH SCREWS FOR TD AND TT THREE FILTER HOUSINGS	30	175		
FBMDR51	MWG WHITE HEAD FOR MD 1/4″ NPT FILTER HOUSING	40	106		
FBMDR62	BOWL CLEAR 10″ FOR MD FILTER HOUSINGS + O-RING	40	106		
FBMDR71	MWG O-RING FOR HEAD MD FILTER HOUSINGS	40	106		

MWG Self Cleaning Filters

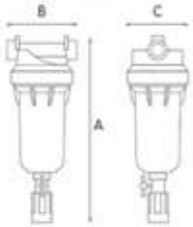

- Made in European Union (Italy);
- Range of sediment self cleaning filters, chrome pleated brass head, clear PET bowl, EPDM o-ring;
- Without cartridge, to order separately;
- With 2 manometers;
- With plastic wrench (ref. FBMDR11).
- Opening the drain valve, a depression is created inside the sump, that lowers the cartridge and reverts the clearing water flow. Closing the valve, the cartridge rises and places the filter in service again. Repeat the action 4-5 times for about 10 seconds each time;
- Easy cartridge disassembly in case of inspection or replacement;
- Range operating pressure 2 - 10 bar; range temperature 4 ÷ 45° C;
- Max ΔP recommended 1 bar.

Ref	Description	Fam.	Subfam.		
FBOA07T	MWG BRASS SELF CLEANING FILTER HOUSING 3/4″ CLEAR BOWL	40	109		
FBOA10T	MWG BRASS SELF CLEANING FILTER HOUSING 1″ CLEAR BOWL	40	109		

Ref.	In-Out Connections	Flow Δp=0,2 bar (l/h)	A (mm)	B (mm)	C (mm)
FBOA07T	3/4" F	5000	460	120	107
FBOA10T	1" F	6000	460	120	107

Box: WxLxH	Box: Q.ty	Box: Weight	Pallet: WxLxH	Pallet: Q.ty	Pallet: Weight

Certificates	Manufacturer	Sectors
DM174-2004	**MWG**	Domestic, Commercial

Filtering Cargtridges for MWG Self-Cleaning Filter Housings

- Washable special cartridges and suitable for MWG Self-Cleaning Filter Housings in our Catalogue.

Ref.	Description	Fam.	Subfam.		
FCOA50PP	MWG PLASTIC PLEATED CARTRIDGE 50 MICRON FOR SELF CLEANING FILTER	40	105		
FCOA90NA	MWG SS NET CARTRIDGE 90 MICRON FOR SELF CLEANING FILTER	40	105		

Box: WxLxH	Box: Q.ty	Box: Weight	Pallet: WxLxH	Pallet: Q.ty	Pallet: Weight

Certificates	Manufacturer	Sectors
DM174-2004	**MWG**	Domestic, Commercial

Accessories

Ref.	Description	Fam.	Subfam.		
FBOAR99	MWG AUTOMATION KIT FOR BRASS SELF CLEANING FILTER	40	109		

Spare Parts

Ref.	Description	Fam.	Subfam.		
FBMDR11	MWG PLASTIC SPANNER FOR FILTER MD	40	106		
FBOAR77	MWG DRAIN KIT FOR BRASS SELF CLEANING FILTER	40	109		

MWG Filter Housings for Washable Cartridge

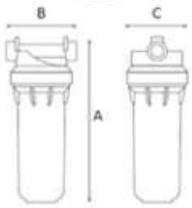

MWG Filter Housings IN/OUT 3/4" - 1" for Washable Cartridge

- Made in European Union (Italy);
- Range of sediment filters, chrome pleated brass head, clear PET bowl, EPDM o-ring;
- Without cartridge, to order separately;
- Available DOE cartridges in AISI 316 (50 or 70 micron) and DOE cartridges in Polyester (50 micron);
- Range operating pressure 2 - 10 bar;
- Range temperature 4 ÷ 45° C.

Ref	Description	Fam.	Subfam.		
FBOP1007T	MWG BRASS FILTER HOUSING 3/4″ - L=10″ CLEAR BOWL	40	109		
FBOP1010T	MWG BRASS FILTER HOUSING 1″ - L=10″ CLEAR BOWL	40	109		

Ref.	In-Out Connections	Flow Δp=0,2 bar (l/h)	A (mm)	B (mm)	C (mm)
FBOP1007T	3/4" F	3000	335	120	105
FBOP1010T	1" F	3500	335	120	105

Box: WxLxH	Box: Q.ty	Box: Weight	Pallet: WxLxH	Pallet: Q.ty	Pallet: Weight

Cartridges to coupling

- 10" DOE filtering cartridges in AISI 316 (ref. FAAP1050 and FAAL1070);
- 10" DOE filtering cartridges in Polyester (ref. FARP1050).

Certificates	Manufacturer	Sectors
DM174-2004	**MWG**	Domestic, Commercial

Accessories

Ref.	Description	Fam.	Subfam.		
FBMDR11	MWG PLASTIC SPANNER FOR FILTER MD	40	106		
FBOPR21	MOUNTING BRACKET WITH SCREWS FOR MWG FILTERS OA, OP	40	109		
FBBGR31	MWG NR. 2 BRASS NIPPLES 1″ W/O-RING FOR FILTER BG/MT	40	106		

MWG Filter Housings for Washable Cartridge

MWG Filter Housings IN/OUT 1,5" - 2" for Washable Cartridge

- Made in European Union (Italy);
- Range of sediment filters, chrome pleated brass head, clear PET bowl, EPDM o-ring;
- Without cartridge, to order separately;
- Available two o-rings AISI 316 cartridges 50 or 70 micron;
- Range operating pressure 2 - 10 bar;
- Range temperature 4 ÷ 45° C.

Ref	Description	Fam.	Subfam.		
FBOP1015T	MWG BRASS FILTER HOUSING 1,5″ - L=10″ CLEAR BOWL	40	109		
FBOP1020T	MWG BRASS FILTER HOUSING 2″ - L=10″ CLEAR BOWL	40	109		

Ref.	In-Out Connections	Flow Δp=0,2 bar (l/h)	A (mm)	B (mm)	C (mm)
FBOP1015T	1,5" F	10000	345	130	105
FBOP1020T	2" F	15000	350	130	105

Box: WxLxH	Box: Q.ty	Box: Weight	Pallet: WxLxH	Pallet: Q.ty	Pallet: Weight

Certificates	Manufacturer	Sectors
DM174-2004	**MWG**	Domestic, Commercial

SS Cartridges to coupling, Washable Filtering Cartridge MWG Housings 1.5" or 2"

- With two O-rings 57 mm;
- Dimensions external diameter 70 mm, internal 30 mm;
- Length = 250 mm and Nominal Length 10".

Ref	Description	Fam.	Subfam.		
FCAP1050	MWG AISI 304 PLEATED CARTRIDGE 10″-50 MICRON 2 O-RINGS 57 MM	40	105		
FCAL1070	MWG AISI 304 SMOOTH CARTRIDGE 10″-70 MICRON 2 O-RINGS 57 MM	40	105		

Box: WxLxH	Box: Q.ty	Box: Weight	Pallet: WxLxH	Pallet: Q.ty	Pallet: Weight

Certificates	Manufacturer	Sectors
DM174-2004	**MWG**	Domestic, Commercial

Accessories

Ref.	Description	Fam.	Subfam.		
FBMDR11	MWG PLASTIC SPANNER FOR FILTER MD	40	106		
FBOPR21	MOUNTING BRACKET WITH SCREWS FOR MWG FILTERS OA, OP	40	109		
FBBGR31	MWG NR. 2 BRASS NIPPLES 1″ W/O-RING FOR FILTER BG/MT	40	106		

MWG Filter Housings for Hot Water

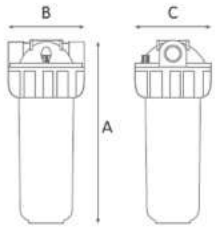

- Made in European Union (Italy);
- Fixable head and bowl in reinforced Nylon red colour and O-ring in EPDM;
- With air valve;
- Without cartridge, to order separately;
- Suitable for standard DOE filtering cartridges with max external diameter 67 mm and nominal length 10” or 20”;
- Max operating pressure = 8,6 bar; Range temperature 4 - 80°C.
- **NOTE: for 20” models you can't use two 10" cartridges.**

Ref.	Description	Fam.	Subfam.		
FBHW1007	MWG HOT WATER FILTER HOUSING 3/4″ - L=10″	40	106		
FBHW1010	MWG HOT WATER FILTER HOUSING 1″ - L=10″	40	106		
FBHW2007	MWG HOT WATER FILTER HOUSING 3/4″ - L=20″	40	106		
FBHW2010	MWG HOT WATER FILTER HOUSING 1″ - L=20″	40	106		

Ref.	IN/OUT Connections (inch)	Nominal Lenght (inch)	A (mm)	B (mm)	C (mm)
FBHW1007	3/4"	10"	315	133	130
FBHW1010	1"	10"	321	145	130
FBHW2007	3/4"	20"	571	133	130
FBHW2010	1"	20"	577	145	130

Ref.	Box: WxLxH	Box: Q.ty	Box: Weight	Pallet: WxLxH	Pallet: Q.ty	Pallet: Weight
FBHW1007						
FBHW1010						
FBHW2007						
FBHW2010						

Certificates	Manufacturer	Sectors
EAC	**MWG**	Domestic, Commercial

AISI 316 Filtering DOE Cartridges for Hot Water

- Washable and suitable for MWG Hot Water Filter Housings on catalog;
- Dimensions external diameter 70 mm, internal 30 mm;
- Nominal Length 10” (= 250 mm) and 20" (= 505 mm);
- Range temperature 4 - 80°C.

Ref	Description	Fam.	Subfam.		
FAAP1050	MWG AISI 316 PLEATED CARTRIDGE 10″-50 MICRON	40	105		
FAAL1070	MWG AISI 316 SMOOTH CARTRIDGE 10″-70 MICRON	40	105		
FAAP2050	MWG AISI 316 PLEATED CARTRIDGE 20″ - 50 MICRON	40	105		
FAAL2070	MWG AISI 316 SMOOTH CARTRIDGE L=20″-70 MICRON	40	105		

Box: WxLxH	Box: Q.ty	Box: Weight	Pallet: WxLxH	Pallet: Q.ty	Pallet: Weight

Certificates	Manufacturer	Sectors
DM174-2004 ACS	**MWG**	Domestic, Commercial, Industrial

Accessories

Ref.	Description	Fam.	Subfam.		
FBMTR11	MWG PLASTIC SPANNER FOR FILTER MT	40	106		
FBMDR21	MWG BLUE PLASTIC BRACKET WITH SCREWS FOR FILTER MD AND MT	40	106		

MWG Antimicrobial Two Pieces Filter Housings

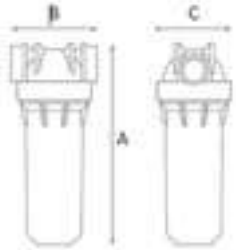

- Made in European Union (Italy);
- Suitable for standard filtering cartridges length 10” or 20”;
- Fixable head in reinforced polypropylene, grey colour;
- Bowl with antimicrobial technology, available in PET clear or in reinforced polypropylene grey colour;
- O-ring in EPDM;
- Max operating pressure 8 bar;
- Range temperature 4 ÷ 45°C.

Ref.	Description	Fam.	Subfam.		
FBMZ1002T	MWG ANTIMICROBIAL FILTER HOUSING 1/4″ NPT L=10″ CLEAR BOWL	40	106		
FBMZ1002G	MWG ANTIMICROBIAL FILTER HOUSING 1/4″ NPT L=10″ GREY BOWL	40	106		
FBMZ1003T	MWG ANTIMICROBIAL FILTER HOUSING 3/8″ BSP L=10″ CLEAR BOWL	40	106		
FBMZ1003G	MWG ANTIMICROBIAL FILTER HOUSING 3/8″ BSP L=10″ GREY BOWL	40	106		
FBMZ1005T	MWG ANTIMICROBIAL FILTER HOUSING 1/2″ BSP L=10″ CLEAR BOWL	40	106		
FBMZ1005G	MWG ANTIMICROBIAL FILTER HOUSING 1/2″ BSP L=10″ GREY BOWL	40	106		
FBMZ1007T	MWG ANTIMICROBIAL FILTER HOUSING 3/4″ BSP L=10″ CLEAR BOWL	40	106		
FBMZ1007G	MWG ANTIMICROBIAL FILTER HOUSING 3/4″ BSP L=10″ GREY BOWL	40	106		
FBMZ1010T	MWG ANTIMICROBIAL FILTER HOUSING 1″ BSP L=10″ CLEAR BOWL	40	106		
FBMZ1010G	MWG ANTIMICROBIAL FILTER HOUSING 1″ BSP L=10″ GREY BOWL	40	106		
FBMZ2007T	MWG ANTIMICROBIAL FILTER HOUSING 3/4″ BSP L=20″ CLEAR BOWL	40	106		
FBMZ2007G	MWG ANTIMICROBIAL FILTER HOUSING 3/4″ BSP L=20″ GREY BOWL	40	106		
FBMZ2010T	MWG ANTIMICROBIAL FILTER HOUSING 1″ BSP L=20″ CLEAR BOWL	40	106		
FBMZ2010G	MWG ANTIMICROBIAL FILTER HOUSING 1″ BSP L=20″ GREY BOWL	40	106		

Models	A (mm)	B (mm)	C (mm)
10"	325	122	107
20"	577	122	107

Models	Box: WxLxH	Box: Q.ty	Box: Weight	Pallet: WxLxH	Pallet: Q.ty	Pallet: Weight
10"						
20"						

Certificates	Manufacturer	Sectors
DM174-2004	**MWG**	Domestic, Commercial

Accessories and Spare Parts

Ref.	Description	Fam.	Subfam.		
FBMDR11	MWG PLASTIC SPANNER FOR FILTER MD	40	106		
FBMDR21	MWG BLUE PLASTIC BRACKET WITH SCREWS FOR FILTER MD AND MT	40	106		
FBMDR31	MWG PLASTIC NIPPLE 3/4″ BSPP W/O-RING FOR FILTER MD/MM/MT	40	106		

Filter Housings Brass Head

- three pieces filter housings;
- head and nut material brass nickel-pleated, sump in SAN clear;
- max operating pressure 8 bar;
- max operating temperature 40° C;
- complete with air valve.

Ref	Description	Fam.	Subfam.		
FB060	FILTER HOUSING OTS 34-9	40	109		
FB061	FILTER HOUSING OTS 1-9	40	109		
FB062	FILTER HOUSING OTS 1-20	40	109		
FB063	FILTER HOUSING OTS 114-10	40	109		
FB064	FILTER HOUSING OTS 114-20	40	109		
FB072	FILTER HOUSING OTS 112-10	40	109		
FB065	FILTER HOUSING OTS 112-20	40	109		
FB073	FILTER HOUSING OTS 2-10	40	109		
FB066	FILTER HOUSING OTS 2-20	40	109		

Ref	Connections (inch)	For Cartridge	L (mm)	H (mm)
FB060	¾"	10"	135	330
FB061	1"	10"	135	330
FB062	1"	20"	135	600
FB063	1¼"	10"	150	340
FB064	1¼"	20"	150	620
FB072	1½"	10"	150	340
FB065	1½"	20"	150	620
FB073	2"	10"	162	360
FB066	2"	20"	162	640

Box: WxLxH	Box: Q.ty	Box: Weight	Pallet: WxLxH	Pallet: Q.ty	Pallet: Weight

Certificates	Manufacturer	Sectors
		Domestic, Commercial

Accessories Wrench

- galvanised steel material.

Ref	Description	Fam.	Subfam.		
FB069	SPANNER FOR FILTER OTS	40	105		

Box: WxLxH	Box: Q.ty	Box: Weight	Pallet: WxLxH	Pallet: Q.ty	Pallet: Weight

MWG AISI 316L Filter Housings

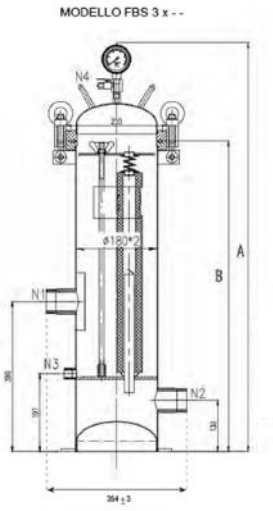

- Multicartridges filter housings flanged top opening AISI 316L for 3 cartridges, In/Out connections 2” BSP M;
- ½” BSP F connection for drain filter;
- ¼” BSP F connection for air valve pressure gauge;
- High resistance and strength electrowelded construction, complete with AISI 316 fixing cartridges accessories, mechanical polishing outside treatment;
- European 2014/68/EU Directive compliant for pressure equipment (PED);
- Max pressure @ 20°C = 10 bar; Max pressure @ 40°C = 9 bar; Max pressure @ 80°C = 8 bar;
- Hydraulic test pressure = 12 bar; Max temperature 80 °C;
- Gasket material EPDM (option in Viton not included, to order separately);
- Suitable for DOE cartridges;
- Cartridges dimensions: ID min/max 28÷30 mm, OD max 65 mm and length 20”-30”- 40”.
- **WARNING!** For these housings the suitable Carbon Block cartridges are FA018 and FA019.
- The FA013 and FA014 cartridges of our catalogue are not suitable for these housings.

Ref	Description	Fam.	Subfam.		
FBS0320	MWG FILTER HOUSING FBS 3x20″ AISI 316L 2″ BSP M	40	115		

Ref	In/Out Connections	A (mm)	B (mm)
FBS0320	2" BSP M	1038	788

Box: WxLxH	Box: Q.ty	Box: Weight	Pallet: WxLxH	Pallet: Q.ty	Pallet: Weight

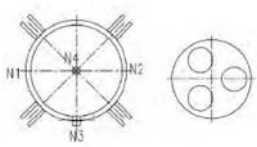

N1	Inlet	2" BSP Male
N2	Outlet	2" BSP Male
N3	Drain	1/2" Female
N4	Pressure Gauge/Vent	1/4" Female

Ref	Description	Fam.	Subfam.		
FBS0330	MWG FILTER HOUSING FBS 3x30″ AISI 316L 2″ BSP M	40	115		

Ref	In/Out Connections	A (mm)	B (mm)
FBS0330	2" BSP M	1292	1042

Box: WxLxH	Box: Q.ty	Box: Weight	Pallet: WxLxH	Pallet: Q.ty	Pallet: Weight

Ref	Description	Fam.	Subfam.		
FBS0340	MWG FILTER HOUSING FBS 3x40″ AISI 316L 2″ BSP M	40	115		

Ref	In/Out Connections	A (mm)	B (mm)
FBS0340	2" BSP M	1546	1296

Box: WxLxH	Box: Q.ty	Box: Weight	Pallet: WxLxH	Pallet: Q.ty	Pallet: Weight

Certificates	Manufacturer	Sectors
DM174-2004 CE	**MWG**	Industrial

MWG AISI 316L Filter Housings

- Multicartridges filter housings flanged top opening AISI 316L for 5 cartridges, In/Out connections 2” BSP M;
- ½” BSP F connection for drain filter;
- ¼” BSP F connection for air valve pressure gauge;
- High resistance and strength electrowelded construction, complete with AISI 316 fixing cartridges accessories, mechanical polishing outside treatment;
- European 2014/68/EU Directive compliant for pressure equipment (PED);
- Max pressure @ 20°C = 10 bar; Max pressure @ 40°C = 9 bar; Max pressure @ 80°C = 8 bar;
- Hydraulic test pressure = 12 bar; Max temperature 80 °C;
- Gasket material EPDM (option in Viton not included, to order separately);
- Suitable for DOE cartridges;
- Cartridges dimensions: ID min/max 28÷30 mm, OD max 65 mm and length 20”- 30”- 40”.
- **WARNING!** For these housings the suitable Carbon Block cartridges are FA018 and FA019.
- The FA013 and FA014 cartridges of our catalogue are not suitable for these housings.

Ref	Description	Fam.	Subfam.		
FBS0520	MWG FILTER HOUSING FBS 5x20″ AISI 316L 2″ BSP M	40	115		

Ref	In/Out Connections	A (mm)	B (mm)
FBS0520	2" BSP M	1045	788

Box: WxLxH	Box: Q.ty	Box: Weight	Pallet: WxLxH	Pallet: Q.ty	Pallet: Weight

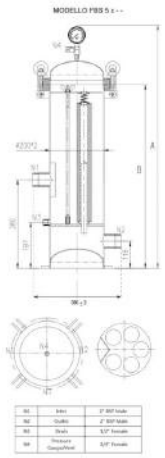

Ref	Description	Fam.	Subfam.		
FBS0530	MWG FILTER HOUSING FBS 5x30″ AISI 316L 2″ BSP M	40	115		

Ref	In/Out Connections	A (mm)	B (mm)
FBS0530	2" BSP M	1042	1299

Box: WxLxH	Box: Q.ty	Box: Weight	Pallet: WxLxH	Pallet: Q.ty	Pallet: Weight

Ref	Description	Fam.	Subfam.		
FBS0540	MWG FILTER HOUSING FBS 5x40″ AISI 316L 2″ BSP M	40	115		

Ref	In/Out Connections	A (mm)	B (mm)
FBS0540	2" BSP M	1553	1296

Box: WxLxH	Box: Q.ty	Box: Weight	Pallet: WxLxH	Pallet: Q.ty	Pallet: Weight

Certificates	Manufacturer	Sectors
DM174-2004 CE	**MWG**	Industrial

MWG AISI 316L Filter Housings

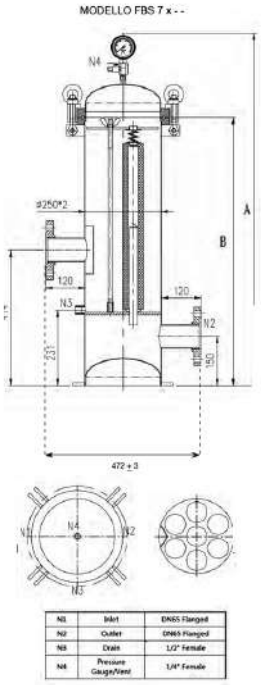

- Multicartridges filter housings flanged top opening AISI 316L for 7 cartridges, In/Out connections flanged 2,5" (DN65) ASME B16.5 CLASS 150;
- ½" BSP F connection for drain filter;
- ¼" BSP F connection for air valve pressure gauge;
- High resistance and strength electrowelded construction, complete with AISI 316 fixing cartridges accessories, mechanical polishing outside treatment;
- European 2014/68/EU Directive compliant for pressure equipment (PED);
- Max pressure @ 20°C = 10 bar; Max pressure @ 40°C = 9 bar; Max pressure @ 80°C = 8 bar;
- Hydraulic test pressure = 12 bar;
- Max temperature 80 °C;
- Gasket material EPDM (option in Viton not included, to order separately);
- Suitable for DOE cartridges;
- Cartridges dimensions: ID min/max 28÷30 mm, OD max 65 mm and length 20"- 30"- 40".
- **WARNING!** For these housings the suitable Carbon Block cartridges are FA018 and FA019.
- The FA013 and FA014 cartridges of our catalogue are not suitable for these housings.

Ref	Description	Fam.	Subfam.		
FBS0720FL	MWG FILTER HOUSING FBS 7x20″ AISI 316L FLANG 2.5″ASME B16.5 CLAS150	40	115		

Ref	In/Out Connections	A (mm)	B (mm)
FBS0720FL	2,5" Flanged	1079	822

Box: WxLxH	Box: Q.ty	Box: Weight	Pallet: WxLxH	Pallet: Q.ty	Pallet: Weight

Ref	Description	Fam.	Subfam.		
FBS0730FL	MWG FILTER HOUSING FBS 7x30″ AISI 316L FLANG 2.5″ASME B16.5 CLAS150	40	115		

Ref	In/Out Connections	A (mm)	B (mm)
FBS0730FL	2,5" Flanged	1076	1333

Box: WxLxH	Box: Q.ty	Box: Weight	Pallet: WxLxH	Pallet: Q.ty	Pallet: Weight

Ref	Description	Fam.	Subfam.		
FBS0740FL	MWG FILTER HOUSING FBS 7x40″ AISI 316L FLANG 2.5″ASME B16.5 CLAS150	40	115		

Ref	In/Out Connections	A (mm)	B (mm)
FBS0740FL	2,5" Flanged	1330	1587

Box: WxLxH	Box: Q.ty	Box: Weight	Pallet: WxLxH	Pallet: Q.ty	Pallet: Weight

Certificates	Manufacturer	Sectors
DM174-2004 CE	**MWG**	Industrial

MWG AISI 316L Filter Housings

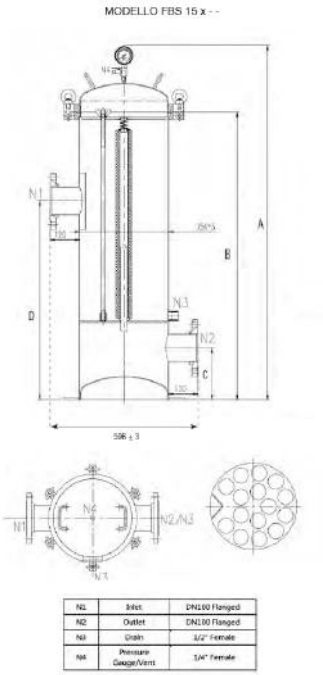

N1	Inlet	DN100 Flanged
N2	Outlet	DN100 Flanged
N3	Drain	1/2" Female
N4	Pressure Gauge/Vent	1/4" Female

- Multicartridges filter housings flanged top opening AISI 316L for 15 cartridges, In/Out connections flanged 4" (DN100) ASME B16.5 CLASS 150;
- ½” BSP F connection for drain filter;
- ¼” BSP F connection for air valve pressure gauge;
- High resistance and strength electrowelded construction, complete with AISI 316 fixing cartridges accessories, mechanical polishing outside treatment;
- European 2014/68/EU Directive compliant for pressure equipment (PED);
- Max pressure @ 20°C = 10 bar; Max pressure @ 40°C = 9 bar; Max pressure @ 80°C = 8 bar;
- Hydraulic test pressure = 12 bar;
- Max temperature 80 °C;
- Gasket material EPDM (option in Viton not included, to order separately);
- Suitable for DOE cartridges;
- Cartridges dimensions: ID min/max 28÷30 mm, OD max 65 mm and length 30”- 40”.
- **WARNING!** For these housings the suitable Carbon Block cartridges are FA018 and FA019.
- The FA013 and FA014 cartridges of our catalogue are not suitable for these housings.

Ref	Description	Fam.	Subfam.		
FBS1530FL	MWG FILTER HOUSING FBS 15x30″ AISI 316L FLANG 4″ASME B16.5 CLAS150	40	115		
FBS1540FL	MWG FILTER HOUSING FBS 15x40″ AISI 316L FLANG 4″ASME B16.5 CLAS150	40	115		

Ref	A (mm)	B (mm)	C (mm)	D (mm)
FBS1530FL	1437	1166	211	806
FBS1540FL	1661	1390	181	1030

Box: WxLxH	Box: Q.ty	Box: Weight	Pallet: WxLxH	Pallet: Q.ty	Pallet: Weight

Certificates	Manufacturer	Sectors
DM174-2004 CE	**MWG**	Industrial

MWG AISI 316L Filter Housings

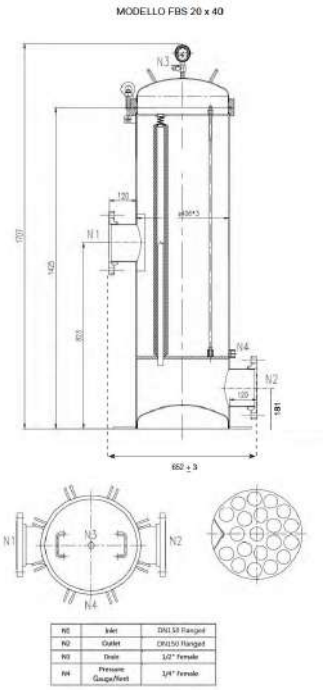

- Multicartridges filter housings flanged top opening AISI 316L for 20 cartridges, In/Out connections flanged 6" (DN150) ASME B16.5 CLASS 150;
- ½” BSP F connection for drain filter;
- ¼” BSP F connection for air valve pressure gauge;
- High resistance and strength electrowelded construction, complete with AISI 316 fixing cartridges accessories, mechanical polishing outside treatment;
- European 2014/68/EU Directive compliant for pressure equipment (PED);
- Max pressure @ 20°C = 10 bar; Max pressure @ 40°C = 9 bar; Max pressure @ 80°C = 8 bar;
- Hydraulic test pressure = 12 bar;
- Max temperature 80 °C;
- Gasket material EPDM (option in Viton not included, to order separately);
- Suitable for DOE cartridges;
- Cartridges dimensions: ID min/max 28÷30 mm, OD max 65 mm and length 40”.
- **WARNING!** For these housings the suitable Carbon Block cartridges are FA018 and FA019.
- The FA013 and FA014 cartridges of our catalogue are not suitable for these housings.

Ref	Description	Fam.	Subfam.		
FBS2040FL	MWG FILTER HOUSING FBS 20X40″ AISI 316L FLANG 6″ASME B16.5 CLAS150	40	115		

Box: WxLxH	Box: Q.ty	Box: Weight	Pallet: WxLxH	Pallet: Q.ty	Pallet: Weight

Certificates	Manufacturer	Sectors
DM174-2004 CE	**MWG**	Industrial

Chemical High Resistance PVC-U Multicartridges Filter Housings HPCF Series

- PVC-U multicartridges filter housings for 5 cartridges flanged top opening;
- With three pieces in / out female socket weld connections;
- With two ¼" threaded connections for air valve pressure gauges and for drain filter;
- All filter housing internal material and all internal spare parts are in PVC-U for high chemical corrosion resistance;
- Opening gasket in EPDM material;
- Connection gasket in EPDM material;
- With aeration valve and pressure gauge;
- European 2014/68/EU Directive compliant for pressure equipment (PED);
- Design pressure = 6,0 bar @ 25°C;
- Hydraulic test pressure = 7,8 bar;
- Max Δp = 1,4 bar;
- Operating temperature = 5 ÷ 40 °C;
- In/Out connections DN50 / D. 63 mm;
- Suitable for DOE cartridges;
- Cartridges dimensions: ID 28÷30 mm, OD 65 mm and length 20"- 30"- 40".
- **WARNING!** The FA013 and FA014 cartridges of our catalogue are not suitable for these housings.

Ref	Description	Fam.	Subfam.		
FB560	MWG MULTICARTRIDGE PVC-U FILTER HOUSING HPCF/B-5DC2 D.63 MM	40	108		

Ref	Cartridges Number	Weight (kg)	Capacity (Liters)	Nominal Flow Rate (lpm)
FB560	n.5 2,5" x 20"	11,0	20,6	300

Box: WxLxH	Box: Q.ty	Box: Weight	Pallet: WxLxH	Pallet: Q.ty	Pallet: Weight

Ref	A	C	D	E	I	K	L	M	N1 N2	N3
FB560	75	715	225	540	10	187,5	186	290	63	G ¼"
FB561	75	965	225	540	10	187,5	186	290	63	G ¼"
FB562	75	1215	225	540	10	187,5	186	290	63	G ¼"

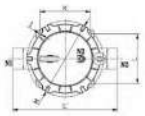

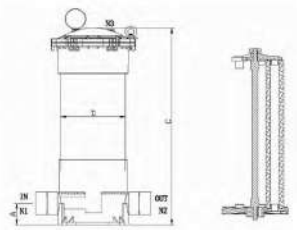

Ref	Description	Fam.	Subfam.		
FB561	MWG MULTICARTRIDGE PVC-U FILTER HOUSING HPCF/B-5DC3 D.63 MM	40	108		

Ref	Cartridges Number	Weight (kg)	Capacity (Liters)	Nominal Flow Rate (lpm)
FB561	n.5 2,5" x 30"	12,7	29,4	300

Box: WxLxH	Box: Q.ty	Box: Weight	Pallet: WxLxH	Pallet: Q.ty	Pallet: Weight

Ref	Description	Fam.	Subfam.		
FB562	MWG MULTICARTRIDGE PVC-U FILTER HOUSING HPCF/B-5DC4 D.63 MM	40	108		

Ref	Cartridges Number	Weight (kg)	Capacity (Liters)	Nominal Flow Rate (lpm)
FB562	n.5 2,5" x 40"	14,4	38,2	300

Box: WxLxH	Box: Q.ty	Box: Weight	Pallet: WxLxH	Pallet: Q.ty	Pallet: Weight

Certificates	Manufacturer	Sectors
CE	MWG	Industrial

Chemical High Resistance PVC-U Multicartridges Filter Housings HPCF Series

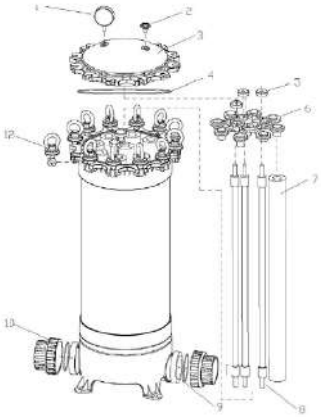

Spare Parts

Ref	Description	Fam.	Subfam.		
FB366	MWG PURGE CAP	40	107		
FB367	MWG MANOMETER 0-10 BAR 1/4″	40	107		
FB580	MWG FLANGED TOP COVER 225 HPCF/PF/HXP + PURGE CAP + O-RING	40	108		
FB363	MWG EPDM CLOSURE O-RING HPCF-PF-HXP 225	40	107		
FB574	MWG CLOSURE CARTRIDGE NUT	40	108		
FB578	MWG 5DC CARTRIDGE FIXING STAR	40	108		
	Cartridges (not included)				
FB371	MWG T GASKET D.63 FOR HPCF FILTER	40	107		
FB572	MWG SINGOL MANIFOLD KIT D. 63 MM W/O-RING	40	108		
FB364	MWG AISI BOLT KIT M10	40	107		
FB584	MWG KIT DRAIN LINE 1″ BSPT M + D.20 TO GLUE HPCF 9	40	108		

Item	Ref	Description	Q.TY	Material
1	FB366	MWG PURGE CAP	1	
2	FB367	MWG MANOMETER 0-10 BAR 1/4″	1	
1+3+4	FB580	MWG FLANGED TOP COVER 225 HPCF/PF/HXP + PURGE CAP + O-RING	1	
4	FB363	MWG EPDM CLOSURE O-RING HPCF-PF-HXP 225	1	EPDM
5	FB574	MWG CLOSURE CARTRIDGE NUT	3	
6	FB578	MWG 5DC CARTRIDGE FIXING STAR	1	
7		Cartridges (not included)		
10	FB371	MWG T GASKET D.63 FOR HPCF FILTER	2	
9+10	FB572	MWG SINGOL MANIFOLD KIT D. 63 MM W/O-RING	2	
11	FB364	MWG AISI BOLT KIT M10	6	AISI
Not shown	FB584	MWG KIT DRAIN LINE 1″ BSPT M + D.20 TO GLUE HPCF 9	1	

Chemical High Resistance PVC-U Multicartridges Filter Housings HPCF Series

- PVC-U multicartridges filter housings for 9 cartridges flanged top opening;
- With three pieces in / out female socket weld connections;
- With two ¼" threaded connections for air valve pressure gauges and for drain filter;
- All filter housing internal material and all internal spare parts are in PVC-U for high chemical corrosion resistance;
- Opening gasket in EPDM material;
- Connection gasket in EPDM material;
- With aeration valve and pressure gauge;
- European 2014/68/EU Directive compliant for pressure equipment (PED);
- Design pressure = 6,0 bar @ 25°C;
- Hydraulic test pressure = 7,8 bar;
- Max Δp = 1,4 bar;
- Operating temperature = 5 ÷ 40 °C;
- In/Out connections DN80 / D. 90 mm;
- 1" BSPT M (+ F 20 mm to glue) drain connection;
- Suitable for DOE cartridges;
- Cartridges dimensions: ID 28÷30 mm, OD 65 mm and length 20"- 30"- 40".
- **WARNING!** The FA013 and FA014 cartridges of our catalogue are not suitable for these housings.

Ref	Description	Fam.	Subfam.		
FB564	MWG MULTICARTRIDGE PVC-U FILTER HOUSING HPCF/B-9DC2 D.90 MM	40	108		

Ref	Cartridges Number	Weight (kg)	Capacity (Liters)	Nominal Flow Rate (lpm)
FB564	n.9 2,5" x 20"	20,0	39,7	250

Box: WxLxH	Box: Q.ty	Box: Weight	Pallet: WxLxH	Pallet: Q.ty	Pallet: Weight

Ref	A	C	D	E	I	J	K	L	M	N1 N2	N3	N4
FB564	69	765	315	520	9	15	276	249	372	90	G ¼"	1"
FB565	69	1015	315	520	9	15	276	249	372	90	G ¼"	1"
FB566	69	1265	315	520	9	15	276	249	372	90	G ¼"	1"

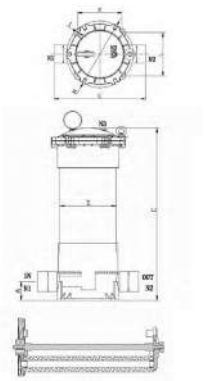

Ref	Description	Fam.	Subfam.		
FB565	MWG MULTICARTRIDGE PVC-U FILTER HOUSING HPCF/B-9DC3 D.90 MM	40	108		

Ref	Cartridges Number	Weight (kg)	Capacity (Liters)	Nominal Flow Rate (lpm)
FB565	n.9 2,5" x 30"	23,0	57,0	350

Box: WxLxH	Box: Q.ty	Box: Weight	Pallet: WxLxH	Pallet: Q.ty	Pallet: Weight

Ref	Description	Fam.	Subfam.		
FB566	MWG MULTICARTRIDGE PVC-U FILTER HOUSING HPCF/B-9DC4 D.90 MM	40	108		

Ref	Cartridges Number	Weight (kg)	Capacity (Liters)	Nominal Flow Rate (lpm)
FB566	n.9 2,5" x 40"	26,0	74,3	550

Box: WxLxH	Box: Q.ty	Box: Weight	Pallet: WxLxH	Pallet: Q.ty	Pallet: Weight

Certificates	Manufacturer	Sectors
CE	MWG	Industrial

Chemical High Resistance PVC-U Multicartridges Filter Housings HPCF Series

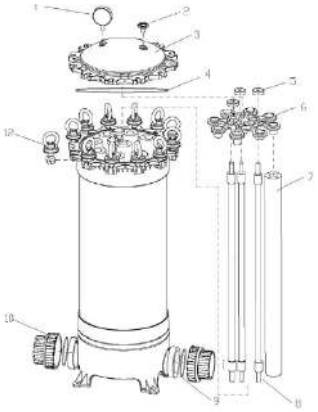

Spare Part

Ref	Description	Fam.	Subfam.		
FB367	MWG MANOMETER 0-10 BAR 1/4″	40	107		
FB366	MWG PURGE CAP	40	107		
FB581	MWG FLANGED TOP COVER 325 HPCF + PURGE CAP + O-RING	40	108		
FB571	MWG EPDM CLOSURE O-RING HPCF 315	40	108		
FB574	MWG CLOSURE CARTRIDGE NUT	40	108		
FB579	MWG 9DC CARTRIDGE FIXING STAR	40	108		
	Cartridge (not included)				
FB575	20″ ROD	40	108		
FB576	30″ ROD	40	108		
FB577	40″ ROD	40	108		
FB583	MWG T GASKET D.90 FOR HPCF FILTER	40	108		
FB573	MWG SINGOL MANIFOLD KIT D. 90 MM W/O-RING	40	108		
FB582	MWG AISI BOLT KIT M12	40	108		
FB584	MWG KIT DRAIN LINE 1″ BSPT M + D.20 TO GLUE HPCF 9	40	108		

Item	Ref	Description	Q.TY	Material
1	FB367	MWG MANOMETER 0-10 BAR 1/4″	1	
2	FB366	MWG PURGE CAP	1	
2+3+4	FB581	MWG FLANGED TOP COVER 325 HPCF + PURGE CAP + O-RING	1	
4	FB571	MWG EPDM CLOSURE O-RING HPCF 315	1	EPDM
5	FB574	MWG CLOSURE CARTRIDGE NUT	3	
6	FB579	MWG 9DC CARTRIDGE FIXING STAR	1	
7		Cartridge (not included)		
8	FB575	20″ ROD		
8	FB576	30″ ROD	3	
8	FB577	40″ ROD	3	
9	FB583	MWG T GASKET D.90 FOR HPCF FILTER	3	
9+10	FB573	MWG SINGOL MANIFOLD KIT D. 90 MM W/O-RING	2	
12	FB582	MWG AISI BOLT KIT M12	12	AISI
Not shown	FB584	MWG KIT DRAIN LINE 1″ BSPT M + D.20 TO GLUE HPCF 9	1	

High Flow PVC-U Single Cartridge Filter Housings PF Series

- PVC-U single cartridge filter housings, with flanged top opening, support legs, in/out female socket weld connections and two ¼” threaded connections for air valve pressure gauges and for drain filter;
- all filter housing internal material and all internal spare parts are in PVC-U for high chemical corrosion resistance;
- opening gasket in EPDM material;
- connection gasket in EPDM material;
- with aeration valve and pressure gauge;
- European 2014/68/EU Directive compliant for pressure equipment (PED);
- design pressure = 7,0 bar @ 25°C;
- hydraulic test pressure = 9,1 bar;
- max Δp = 1,4 bar;
- operating temperature = 5 ÷ 40 °C;
- In/Out flanged connections DN50;
- suitable for high flow “special pleated cartridges”;
- cartridges dimensions: 6” x 20” and 6” x 40”.

Ref	Description	Fam.	Subfam.		
FB360	MWG SINGLE CARTRIDGE PVC-U FILTER HOUSING PF20 DN50	40	107		

Ref	Cartridge Type	Weight (kg)	Capacity (Liters	Nominal Flow Rate (lpm)
FB360	6" x 20"	18,0	24,8	300

Box: WxLxH	Box: Q.ty	Box: Weight	Pallet: WxLxH	Pallet: Q.ty	Pallet: Weight

Certificates	Manufacturer	Sectors
CE	**MWG**	Industrial

Ref	Description	Fam.	Subfam.		
FB361	MWG SINGLE CARTRIDGE PVC-U FILTER HOUSING PF40 DN50	40	107		

Ref	Cartridge Type	Weight (kg)	Capacity (Liters)	Nominal Flow Rate (lpm)
FB361	6" x 40"	22,3	41,0	300

Box: WxLxH	Box: Q.ty	Box: Weight	Pallet: WxLxH	Pallet: Q.ty	Pallet: Weight

Certificates	Manufacturer	Sectors
CE	**MWG**	Industrial

High Flow PVC-U Single Cartridge Filter Housings PF Series

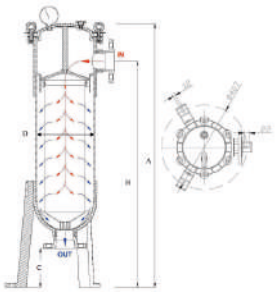

Ref	A	B	C	D
FB360	1070	905	165	225
FB361	1560	1395	165	225

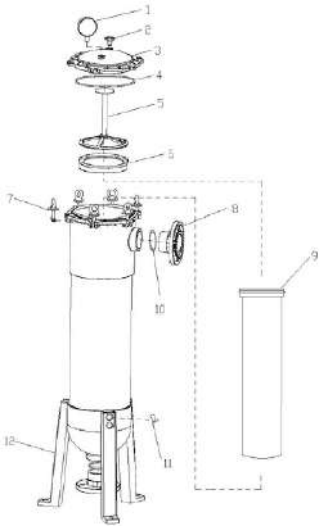

Spare Parts

Ref	Description	Fam.	Subfam.		
FB367	MWG MANOMETER 0-10 BAR 1/4″	40	107		
FB366	MWG PURGE CAP	40	107		
FB580	MWG FLANGED TOP COVER 225 HPCF/PF/HXP + PURGE CAP + O-RING	40	108		
FB363	MWG EPDM CLOSURE O-RING HPCF-PF-HXP 225	40	107		
FB368	MWG PVC SPACER	40	107		
FB359	MWG PF FILTER 6″ CARTRIDGE SEAL RING	40	107		
FB364	MWG AISI BOLT KIT M10	40	107		
FB370	MWG DN50 FLANGE	40	107		
	Single Cartidges (not included)				
FB362	MWG 2″ FLANGE O-RING	40	107		
FB374	MWG SUPPORT LEG FIXING SCREW	40	107		
FB373	MWG SUPPORT LEG	40	107		

Item	Ref	Description	Q.TY	Material
1	FB367	MWG MANOMETER 0-10 BAR 1/4″	1	
2	FB366	MWG PURGE CAP	1	
2+3+4	FB580	MWG FLANGED TOP COVER 225 HPCF/PF/HXP + PURGE CAP + O-RING	1	
4	FB363	MWG EPDM CLOSURE O-RING HPCF-PF-HXP 225	1	EPDM
5	FB368	MWG PVC SPACER	1	PVC
6	FB359	MWG PF FILTER 6″ CARTRIDGE SEAL RING	1	
7	FB364	MWG AISI BOLT KIT M10	6	AISI
8	FB370	MWG DN50 FLANGE	2	
9		Single Cartidges (not included)		
10	FB362	MWG 2″ FLANGE O-RING	2	
11	FB374	MWG SUPPORT LEG FIXING SCREW	6	
12	FB373	MWG SUPPORT LEG	3	

High Flow PVC-U Single Cartridge Filter Housings PF Series

Cartridge to coupling

- high flow “special pleated cartridges” single open-ended;
- filter media and support in PP, o-ring seal in EPDM;
- end caps in fiberglass reinforced PP;
- inside to outside flow pattern;
- external diameter = 6” (152 mm);
- recommended maximum ΔP 1,0 bar at 20°C.

Ref	Description	Fam.	Subfam.		
FB376	MWG PLEATED CARTRIDGE PP DLHF620PP4.5E	40	107		
FB379	MWG PLEATED CERTRIDGE PP DLHF620PP20E	40	107		
FB381	MWG PLEATED CARTRIDGE PP DLHF620PP70E	40	107		
FB382	MWG PLEATED CARTRIDGE PP DLHF620PP100E	40	107		

Ref	Lenght (inch)	Micron	Nominal Flow Rate (lpm)
FB376	20"	4,5	660
FB379	20"	20	660
FB381	20"	70	660
FB382	20"	100	660

Box: WxLxH	Box: Q.ty	Box: Weight	Pallet: WxLxH	Pallet: Q.ty	Pallet: Weight

Certificates	Manufacturer	Sectors
	MWG	Industrial

Ref	Description	Fam.	Subfam.		
FB386	MWG PLEATED CARTRIDGE PP DLHF640PP4.5E	40	107		
FB389	MWG PLEATED CARTRIDGE PP DLHF640PP20E	40	107		
FB391	MWG PLEATED CARTRIDGE PP DLHF640PP70E	40	107		
FB392	MWG PLEATED CARTRIDGE PP DLHF640PP100E	40	107		

Ref	Lenght (inch)	Micron	Nominal Flow Rate (lpm)
FB386	40"	4,5	1300
FB389	40"	20	1300
FB391	40"	70	1300
FB392	40"	100	1300

Box: WxLxH	Box: Q.ty	Box: Weight	Pallet: WxLxH	Pallet: Q.ty	Pallet: Weight

Certificates	Manufacturer	Sectors
	MWG	Industrial

PVC-U Bag Filter System

- PVC-U bag filter housings, with flanged top opening, support legs, in/out female socket weld connections and two ¼” threaded connections for air valve pressure gauges and for drain filter;
- all filter housing internal material and all internal spare parts are in PVC-U for high chemical corrosion resistance;
- Opening gasket in EPDM material;
- Connection gasket in EPDM material;
- With aeration valve and pressure gauge;
- European 2014/68/EU Dir. compliant for pressure equipment (PED);
- Nominal flow rate = 300 lpm;
- Design pressure = 7,0 bar @ 25°C;
- Hydraulic test pressure = 9,1 bar;
- Max Δp = 1,0 bar;
- Operating temperature = 5 ÷ 40 °C;
- In/Out flanged connections DN50;
- Suitable for bag filter;
- Bag filters dimensions: 7” x 16” and 7” x 32”.

Ref	Description	Fam.	Subfam.		
FB355	MWG BAG FILTER HOUSING PVC-U MOD. HXP-BF-1-1-B DN50	40	107		

Ref	Bag Size	Weight (kg)	Capacity (Litres)	Nominal Flow Rate
FB355	7" x 16"	15	17	300

Box: WxLxH	Box: Q.ty	Box: Weight	Pallet: WxLxH	Pallet: Q.ty	Pallet: Weight

Ref	Description	Fam.	Subfam.		
FB356	MWG BAG FILTER HOUSING PVC-U MOD. HXP-BF-1-2-B DN50	40	107		

Ref	Bag Size	Weight (kg)	Capacity (Liters)	Nominal Flow Rate
FB356	7" x 32"	20	30	300

Box: WxLxH	Box: Q.ty	Box: Weight	Pallet: WxLxH	Pallet: Q.ty	Pallet: Weight

Certificates	Manufacturer	Sectors
CE	**MWG**	Industrial

PVC-U Bag Filter System

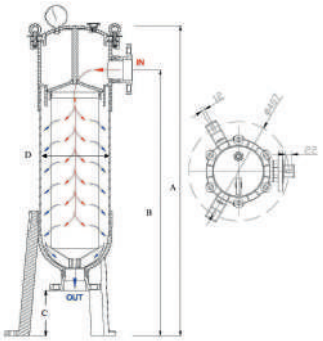

Ref	C	D	A	B
FB355	165	225	845	685
FB356	165	225	1225	1065

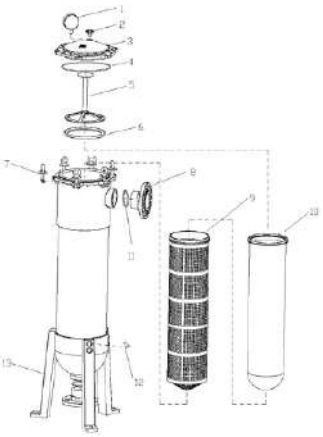

Spare Parts

Ref	Description	Fam.	Subfam.		
FB367	MWG MANOMETER 0-10 BAR 1/4″	40	107		
FB366	MWG PURGE CAP	40	107		
FB580	MWG FLANGED TOP COVER 225 HPCF/PF/HXP + PURGE CAP + O-RING	40	108		
FB363	MWG EPDM CLOSURE O-RING HPCF-PF-HXP 225	40	107		
FB368	MWG PVC SPACER	40	107		
FB364	MWG AISI BOLT KIT M10	40	107		
FB370	MWG DN50 FLANGE	40	107		
FB383	MWG PVC 16″ FILTER SUPPORT ARMOR	40	107		
FB383A	MWG PVC 32″ FILTER SUPPORT ARMOR	40	107		
	Bag Filter (not included)				
FB362	MWG 2″ FLANGE O-RING	40	107		
FB374	MWG SUPPORT LEG FIXING SCREW	40	107		
FB373	MWG SUPPORT LEG	40	107		

Rif. N.	Ref	Description	Q.ty	Material
1	FB367	MWG MANOMETER 0-10 BAR 1/4″	1	
2	FB366	MWG PURGE CAP	1	
2+3+4	FB580	MWG FLANGED TOP COVER 225 HPCF/PF/HXP + PURGE CAP + O-RING	1	
4	FB363	MWG EPDM CLOSURE O-RING HPCF-PF-HXP 225	1	EPDM
5	FB368	MWG PVC SPACER	1	PVC
7	FB364	MWG AISI BOLT KIT M10	6	AISI
8	FB370	MWG DN50 FLANGE	2	
9	FB383	MWG PVC 16″ FILTER SUPPORT ARMOR	1	PVC
9	FB383A	MWG PVC 32″ FILTER SUPPORT ARMOR	1	PVC
10		Bag Filter (not included)		
11	FB362	MWG 2″ FLANGE O-RING	2	
12	FB374	MWG SUPPORT LEG FIXING SCREW	6	
13	FB373	MWG SUPPORT LEG	3	

PVC-U Bag Filter System

PVC-U Bag Filter System

- Inside to outside flow pattern;
- In PP material;
- External diameter = 7” (178 mm);
- Recommended maximum Δp = 1,0 bar at 20°C.

Ref	Description	Fam.	Subfam.		
FB357A	MWG BAG FILTER L= 16″ - 1 MICRON	40	107		
FB357B	MWG BAG FILTER L= 16″ - 5 MICRON	40	107		
FB357C	MWG BAG FILTER L= 16″ - 10 MICRON	40	107		
FB357D	MWG BAG FILTER L= 16″ - 25 MICRON	40	107		
FB357E	MWG BAG FILTER L= 16″ - 50 MICRON	40	107		
FB357F	MWG BAG FILTER L= 16″ - 100 MICRON	40	107		

Ref	Length	Micron	Nominal Flow Rate (lpm)
FB357A	16"	1	330
FB357B	16"	5	330
FB357C	16"	10	330
FB357D	16"	25	330
FB357E	16"	50	330
FB357F	16"	100	330

Ref	Description	Fam.	Subfam.		
FB358A	MWG BAG FILTER L= 32″ - 1 MICRON	40	107		
FB358B	MWG BAG FILTER L= 32″ - 5 MICRON	40	107		
FB358C	MWG BAG FILTER L= 32″ - 10 MICRON	40	107		
FB358D	MWG BAG FILTER L= 32″ - 25 MICRON	40	107		
FB358E	MWG BAG FILTER L= 32″ - 50 MICRON	40	107		
FB358F	MWG BAG FILTER L= 32″ - 100 MICRON	40	107		

Ref	Length	Micron	Nominal Flow Rate (lpm)
FB358A	32"	1	660
FB358B	32"	5	660
FB358C	32"	10	660
FB358D	32"	25	660
FB358E	32"	50	660
FB358F	32"	100	660

Certificates	Manufacturer	Sectors
CE	**MWG**	Industrial

Filter housings, cartridges and polyphosphate feeders

MWG Polyphosphate Proportioning Feeders

COD: FBDP04V COD: FBDP06V

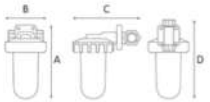

COD: FBDP10V

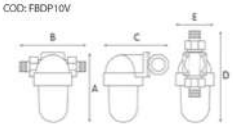

- Made in European Union (Italy);
- Proportional dosage to water flow through Venturi system;
- Average dosage 3 ppm of P2O5;
- Head in reinforced polypropylene (in brass only for ref. FBDP04V), bowl in SAN, o-ring in EPDM;
- Availability of different models with IN-OUT connections from ½" F (with screw dosing setting or bypass) to 1" F;
- With specific plastic wrench (Ref. FBMDR11 for 3/4" and 1" models);
- Max operating pressure 8 bar;
- Range temperature 4 - 45 °C;
- Shipped without Polyphosphate, to order separately.

Ref.	Description	Fam.	Subfam.		
FBDP04V	MWG POLYPHOSPHATE FEEDER 1/2″ EMPTY WITH SCREW FOR DOSING	40	111		
FBDP06V	MWG POLYPHOSPHATE FEEDER 1/2″ EMPTY WITH BYPASS	40	111		
FBDP07V	MWG POLYPHOSPHATE FEEDER 3/4″ EMPTY	40	111		
FBDP10V	MWG POLYPHOSPHATE FEEDER 1″ EMPTY	40	111		

Ref.	IN-OUT Connections	Max Flow Rate (l/h)	A (mm)	B (mm)	C (mm)	D (mm)	E (mm)
FBDP04V	1/2"	1500	150	65	126	145	
FBDP06V	1/2"	1500	150	65	112	145	
FBDP07V	3/4"	3000	208	164	164	256	105
FBDP10V	1"	5000	208	168	164	259	105

Ref.	Box: WxLxH.	Box: Q.ty	Box: Weight	Pallet: WxLxH.	Pallet: Q.ty	Pallet: Weight
FBDP04V						
FBDP06V						
FBDP07V						
FBDP10V						

Certificates	Manufacturer	Sectors
DM174-2004	**MWG**	Domestic, Commercial

Spare Parts

Ref.	Description	Fam.	Subfam.		
FBDPR04	MWG PLASTIC SPANNER FOR FBDP04V	40	111		
FBDPR06	MWG PLASTIC SPANNER FOR FBDP06V	40	111		
FBMDR11	MWG PLASTIC SPANNER FOR FILTER MD	40	106		

MWG Powder Polyphosphate

COD: FB347A

Available polyphosphate packages as spare.

Ref	Description	Fam.	Subfam.		
FB347C	MWG POLYPHOSPHATE COMPACT POWDER BLISTER (6 REFILL X 80 G)	40	112		
FB347D	MWG POLYPHOSPHATE POWDER PACK 0,5 KG	40	112		
FB347A	MWG POLYPHOSPHATE POWDER BOX 1 KG	40	112		
FB347	MWG POLYPHOSPHATE POWDER BOX 25 KG	40	112		

Certificates	Manufacturer	Sectors
DM174-2004	**MWG**	Domestic, Commercial

Filter housings, cartridges and polyphosphate feeders

Polyphosphate Crystals Feeder

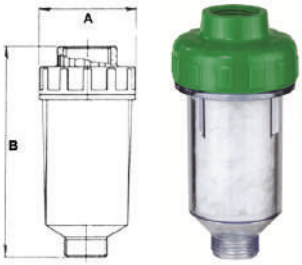

- polyphosphate crystals feeder antiscale;
- particular suitable for washing machines – dish washers – boilers;
- initial filling of polyphosphate included;
- max operating pressure 7 bar;
- max operating temperature 35°C.

Ref	Description	Fam.	Subfam.		
FBDC07	MWG POLYPHOSPHATE CRYSTAL FEEDER DC 3/4″	40	106		

Ref	A (mm)	B (mm)	Polyphosphate Filling (g)
FBDC07	68	130	160

Box: WxLxH	Box: Q.ty	Box: Weight	Pallet: WxLxH	Pallet: Q.ty	Pallet: Weight

Certificates	Manufacturer	Sectors
STANDARD EN 1208: 2005	**MWG**	Domestic, Commercial

Polyphosphate Crystals

- based on a mixture of selected high polymerization metaphosphates, in transparent vitreous state white or blue colour;
- typical composition: P2O5 > 60% and Na2O = 30% av.;
- to be used as antiscaling and corrosion inhibitor with water for potable and industrial applications;
- slow dissolution crystals, proportional to crystal size, temperature, pH and water hardness.

Ref	Description	Fam.	Subfam.		
FB350	MWG WHITE POLYPHOSPHATE CRYSTALS 5-15 MM BOX 25KG	40	112		
FB350A	MWG WHITE POLYPHOSPHATE CRYSTALS 5-15 MM PACK 1 K	40	112		
FB351	MWG POLYPHOSPHATE CRYSTALS 10-20 MM BOX 25 KG	40	112		
FB351A	MWG POLYPHOSPHATE CRYSTALS 10-20 MM PACK 1 KG	40	112		
FB348	MWG BLUE POLYPHOSPHATE CRYSTALS 5-15 MM BOX 25KG	40	112		
FB348A	MWG BLUE POLYPHOSPHATE CRYSTALS 5-15 MM PACK 1KG	40	112		
FB349	MWG BLUE POLYPHOSPHATE CRYSTALS 10-20MM BOX 25KG	40	112		
FB349A	MWG BLUE POLYPHOSPHATE CRYSTALS 10-20 MM PACK 1KG	40	112		

Box: WxLxH	Box: Q.ty	Box: Weight	Pallet: WxLxH	Pallet: Q.ty	Pallet: Weight

Certificates	Manufacturer	Sectors
STANDARD EN 1208: 2005	**MWG**	Domestic, Commercial

Liquid Polyphoshate

NOTE: not suitable for Polyphosphate Crystals Feeder.

Designed to use with dosing pump.

Ref	Description	Fam.	Subfam.		
FB346	MWG LIQUID POLYPHOSPHATE BOTTLE 1 LITER	40	112		

Certificates	Manufacturer	Sectors
	MWG	Domestic, Commercial

EUROTROL®
WATER TREATMENT COMPONENTS

Ion exchange resins, filtering media

Back to index

Pure Resin PC002

- Gel Strong Acid Cation Exchange Resin;
- Light coloured;
- Gel type sulfonated polystyrene cation resin supplied in the sodium form as moist, tough uniform spherical beads.
- Well suited for industrial, commercial or residential softening applications;
- High capacity and good physical stability;
- Shipped in 25 liter bags.

Ref	Description	Fam.	Subfam.		
RA300	STRONG CATION GEL PURE RESIN PC002 (Na)	65	300		

Polymer Matrix Structure	Polystyrene crosslinked with 7% DVB
Functional Group	R-(SO3)-M+
Ionic Form, as shipped	Sodium (Na+)
Physical Form and Appearance	Clear Spherical Beads
Sphericity	95% min
Screen Size Range - U.S. Standard Screen	16 ÷ 50 mesh, wet
Particle Size Range	+1,2 mm < 5%, - 0,3 mm < 1%
Uniformity Coefficient	1,6 max
Water Retention, Na+ form	45 ÷ 50%
Swelling Na+ → H+	10% max
Ca2+→ Na+	5% max
Shipping Weight, Na+ form	770 ÷ 870 g/l (50 lbs/cu.ft, approx.)
Total Exchange Capacity, Na+ form	1,9 eq/l min.
pH Range	0 ÷ 14

Suggested Operating Conditions	
Maximum Temperature Na+ form	120°C (248°F)
Maximum Temperature H+ form	100°C (212°F)
Minimum Bed Depth	0,6 m (24”)
Minimum Bed Depth	8 ÷ 20% NaCl or saturated salt water
Regeneration	
Regenerant Concentration	8 ÷ 20% NaCl or saturated salt water
Flow Rate	2 ÷ 4 BV/h (0,25 ÷ 0,50 gpm/cu.ft)
Flow Rate	At least 30 Minutes
Displacement Rinse Rate	Same as Regenerant Flow Rate
Displacement Rinse Volume	Same as Service Flow Rate
Fast Rinse Rate	Same as Service Flow Rate
Fast Rinse Volume	3 ÷ 4 BV (22,5 ÷ 30 gallons/cu.ft)
Service Flow Rate	10 ÷ 50 BV/h (1,25 ÷ 6,25 gpm/cu.ft)

Box: WxLxH	Box: Q.ty	Box: Weight	Pallet: WxLxH	Pallet: Q.ty	Pallet: Weight

Certificates	Manufacturer	Sectors
DM174-2004 NSF44 NSF61	Pure Resin	Domestic, Commercial, Industrial

Pure Resin PC003

- Gel Strong Acid Cation Exchange Resin;
- High capacity premium grade bead form, conventional gel polystyrene sulphonate cation exchange resin supplied in the sodium or hydrogen form;
- Intended for use in all water softening, dealcalisation, deionization and chemical processing applications, such as the following:
- In H form (PC003H), can be used in multiple and mixed bed demineralizers with strong base;
- Anion exchangers such as Pure PA101, PA102 and PA103 in OH- form.
- Well suited for industrial, commercial or residential softening applications because of its high capacity and good physical stability;
- Shipped in 25 liter bags.

Ref	Description	Fam.	Subfam.		
RA310	STRONG CATION GEL PURE RESIN PC003 (Na) HIGH CAPACITY	65	300		

Polymer Matrix Structure	Clear Spherical Beads
Functional Group	R-(SO3)¯M+
Ionic Form, as shipped	Na+ / H+
Physical Form and Appearance	Clear Spherical Beads
Sphericity	95% min
Screen Size Range US Standard Screen	16 ÷ 50 mesh, wet
Particle Size Range	+1,2 mm < 5%, - 0,3 mm < 1%
Uniformity Coefficient	1,6 max
Water Retention, Na+ form - H form	43 ÷ 48% - 50 ÷ 56%
Swelling Na+ → H+	10% max
Swelling Ca^{2+}→Na+	5% max
Shipping Weight, Na+ form	780 ÷ 880 g/l (51 lbs/cu.ft, approx.)
Shipping Weight, Ca^{2+}→Na+	770 ÷ 870 g/l (50 lbs/cu.ft, approx.)
Total Exchange Capacity, Na+ form	2,0 eq/l min.
Total Exchange Capacity, H+ form	1,9 eq/l min.
pH Range	0 ÷ 14

Suggested Operating Conditions	
Maximum Temperature Na form	150°C (300°F) max
Maximum Temperature H form	100°C (212°F) max
Minimum Bed Depth	0,6 m (24”)
Backwash Rate	25 ÷ 50% Bed Expansion
Regeneration	
Sodium Cycle	8 ÷ 20% NaCl
Hydrogen Cycle	5 ÷ 10% HCl, 2-8% H2SO4
Flow Rate	2 ÷ 7 BV/h (0,25 ÷ 0,90 gpm/cu.ft)
Displacement Rinse Rate	Same as Regenerate Flow Rate
Displacement Rinse Volume	1,4 ÷ 2,0 BV (10 ÷ 15 gallons/cu.ft)
Fast Rinse Rate	Same as Service Flow Rate
Fast Rinse Volume	4 ÷ 8 BV (30 ÷ 60 gallons/cu.ft)
Service Flow Rate	10 ÷ 50 BV/h (1,25 ÷ 6,25 gpm/cu.ft)

Box: WxLxH	Box: Q.ty	Box: Weight	Pallet: WxLxH	Pallet: Q.ty	Pallet: Weight

Certificates	Manufacturer	Sectors
DM174-2004 NSF44 NSF61	Pure Resin	Domestic, Commercial, Industrial

Pure Resin PC003UN-NA

- Gel Strong Acid Cation Exchange Resin with high uniformity coefficient;
- High capacity premium grade bead form, conventional gel polystyrene sulphonate cation exchange resin supplied in the sodium or hydrogen form;
- Intended for use in all water softening, dealcalisation, deionization and chemical processing applications, such as the following:
- In H form (PC003HUN), can be used in multiple and mixed bed demineralizers with strong base;
- Anion exchangers such as Pure PA101, PA102 and PA103 in OH- form.
- Well suited for industrial, commercial or residential softening applications because of its high capacity and good physical stability;
- Shipped in 25 liter bags.

Ref	Description	Fam.	Subfam.		
RA312	STRONG CATION GEL PURE RESIN PC003UN-Na	65	300		

Polymer Matrix Structure	Polystyrene crosslinked with 8% DVB
Functional Group	R-(SO3)¯M+
Ionic Form, as shipped	Na+
Physical Form and Appearance	Clear Spherical Beads
Sphericity	95% min
Screen Size Range US Standard Screen	25 ÷ 35 mesh, wet
Particle Size Range	0,5 ÷ 0,71 mm ≥ 95%
Uniformity Coefficient	1,15 max
Water Retention, Na+ form -H form	43 ÷ 48% - 47 ÷ 54% i
Swelling Na+ → H+	10% max
Swelling Ca^{2+}→Na+	5% max
Shipping Weight, Na+ form	780 ÷ 880 g/l (51 lbs/cu.ft, approx.)
Shipping Weight, H form	770 ÷ 870 g/l (50 lbs/cu.ft, approx.)
Total Exchange Capacity, Na+ form	2,0 eq/l min.
Total Exchange Capacity, H form	1,9 eq/l min.
pH Range	0 ÷ 14

Suggested Operating Conditions	
Maximum Temperature Na+	150°C (300°F) max
Maximum Temperature H+	100°C (212°F) max
Minimum Bed Depth	0,6 m (24”)
Backwash Rate	25 ÷ 50% Bed Expansion
Regeneration	
Sodium Cycle	8 ÷ 20% NaCl
Hydrogen Cycle	5 ÷ 10% HCl, 2-8% H2SO4
Flow Rate	2 ÷ 7 BV/h (0,25 ÷ 0,90 gpm/cu.ft)
Displacement Rinse Rate	Same as Regenerate Flow Rate
Displacement Rinse Volume	1,4 ÷ 2,0 BV (10 ÷ 15 gallons/cu.ft)
Fast Rinse Rate	Same as Service Flow Rate
Service Flow Rate	4 ÷ 8 BV (30 ÷ 60 gallons/cu.ft)
Service Flow Rate	10 ÷ 50 BV/h (1,25 ÷ 6,25 gpm/cu.ft)

Box: WxLxH	Box: Q.ty	Box: Weight	Pallet: WxLxH	Pallet: Q.ty	Pallet: Weight

Certificates	Manufacturer	Sectors
DM174-2004 NSF44 NSF61	Pure Resin	Domestic, Commercial, Industrial

Pure Resin PC100NA

- Macroporous Strong Acid Cation Exchange Resin;
- Macroporous poly (styrene sulphonate) cation exchange resin with excellent resistance to both osmotic and thermal shock;
- Supplied as spherical beads;
- Used for water softening with high level of DVB;
- Also widely used in mixed bed demineralizers where high hydraulic demands exist and high resistance to mechanical thermal
- and oxidative stresses are required, such as condensate polishing, chemical processing, hydrometallurgy, sugar treatment;
- Shipped in 25 liter bags.

Ref	Description	Fam.	Subfam.		
RA318	STRONG CATION MACROPOROUS PURE RESIN PC100 (Na)	65	300		

Typical physical and chemical characteristics	
Structure of the polymer matrix	Polystyrene with 8% of DVB
Functional Group	R-(SO3)¯M
Ionic Form, as shipped	Na
Physical Form and Appearance	Spherical clear grains
Sphericity	95% minimo
Screen Size Range US Standard Screen	16 ÷ 50 mesh, a umido
Particle Size Range	+1,2 mm < 5%, - 0,3 mm < 1%
Uniformity Coefficient	1,6 al massimo
Water Retention	45 ÷ 55%
Swelling Na+ → H+	10% al massimo
Shipping Weight	760 ÷ 830 g/l (50 lbs/cu.ft, approx.)
Total exchange capacity	1,8 eq/l min
pH Range	0 ÷ 14

Suggested Operating Conditions	
Maximum Temperature	150ºC (300ºF) max
Minimum Bed Depth	0,6 m (24”)
Backwash Rate	2 ÷ 7 BV/h (0,25 ÷ 0,90 gpm/cu.ft)
Regeneration	8 ÷ 20% NaCl
Flow Rate	2 ÷ 7 BV/h (0,25 ÷ 0,90 gpm/cu.ft)
Contact Time	At least 20 Minutes
Displacement Rinse Rate	Same as Regenerant Flow Rate
Displacement Rinse Volume	1,4 ÷ 2,0 BV (10 ÷ 15 galloni/cu.ft)
Fast Rinse Rate	Uguale alla portata di esercizio
Fast Rinse Volume	4 ÷ 8 BV (30 ÷ 60 galloni/cu.ft)
Service Flow Rate	10 ÷ 50 BV/h (1,25 ÷ 6,25 gpm/cu.ft)

Box: LxPxH	Box: Q.tà	Box: Peso	Pallet: LxPxH	Pallet: Q.tà	Pallet: Peso

Certificates	Manufacturer	Sectors
DM174-2004	Pure Resin	Industrial

Pure Resin PC100H

- Macroporous Strong Acid Cation Exchange Resin;
- Macroporous poly (styrene sulphonate) cation exchange resin with excellent resistance to both osmotic and thermal shock;
- Supplied as spherical beads;
- Used for water softening with high level of DVB;
- Also widely used in mixed bed demineralizers where high hydraulic demands exist and high resistance to mechanical thermal and oxidative stresses are required, such as condensate polishing, chemical processing, hydrometallurgy, sugar treatment;
- Shipped in 25 liter bags.

Ref	Description	Fam.	Subfam.		
RA320	STRONG CATION MACROPOROUS PURE RESIN PC100 (H)	65	300		

Polymer Matrix Structure	Polystyrene crosslinked with 8% DVB
Functional Group	R-(SO3)¯M+
Ionic Form, as shipped	H+
Physical Form and Appearance	Clear Spherical Beads
Sphericity	95% min
Screen Size Range US Standard Screen	16 ÷ 50 mesh, wet
Particle Size Range	+1,2 mm < 5%, - 0,3 mm < 1%
Uniformity Coefficient	1,6 max
Water Retention	50 ÷ 60%
Swelling Na+ → H+	10% max
Shipping Weight, Na+ form	760 ÷ 830 g/l (50 lbs/cu.ft, approx.)
Total Exchange Capacity	1,7 eq/l min.
pH Range	0 ÷ 14

Suggested Operating Conditions	
Maximum Temperature	120ºC (248ºF) max
Minimum Bed Depth	0,6 m (24”)
Backwash Rate	2 ÷ 7 BV/h (0,25 ÷ 0,90 gpm/cu.ft)
Regeneration	5 ÷ 10% HCl, 2 ÷ 8% H2SO4
Flow Rate	2 ÷ 7 BV/h (0,25 ÷ 0,90 gpm/cu.ft)
Contact Time	At least 20 Minutes
Displacement Rinse Rate	Same as Regenerant Flow Rate
Displacement Rinse Volume	1,4 ÷ 2,0 BV (10 ÷ 15 gallons/cu.ft)
Fast Rinse Rate	Same as Service Flow Rate
Fast Rinse Volume	4 ÷ 8 BV (30 ÷ 60 gallons/cu.ft)
Service Flow Rate	10 ÷ 50 BV/h (1,25 ÷ 6,25 gpm/cu.ft)

Box: WxLxH	Box: Q.ty	Box: Weight	Pallet: WxLxH	Pallet: Q.ty	Pallet: Weight

Certificates	Manufacturer	Sectors
	Pure Resin	Industrial

Pure Resin PC200FD

- Poly-acrylic Macroporous Weak Acid Cation Exchange Resin;
- It can be supplied in the hydrogen (H+) form or sodium (Na+) as spherical beads;
- In H cycle is used for dealcalisation, deionization and chemical processing applications;
- Supplied in sodium cycle for use in applications such as softening and heavy metal cations removal. This requires a two stage regeneration process using a strong acid first and then a neutralization rinse to put the resin into the sodium form and is especially effective in high solids softening applications;
- Shipped in 25 liter bags.

Ref	Description	Fam.	Subfam.		
RA330	WEAK CATION MACROPOROUS PURE RESIN PC200FD	65	300		

Polymer Matrix Structure	Poly-acrylic
Functional Group	R-(COOH)$^-$
Ionic Form, as shipped	H+
Physical Form and Appearance	Clear Spherical Beads
Sphericity	95% min
Screen Size Range US Standard Screen	16 ÷ 50 mesh, wet
Particle size Range	+1,2 mm < 5%, - 0,3 mm < 1%
Uniformity Coefficient	1,6 max
Water Retention, H+ form	45 ÷ 50%
Swelling Na+ → H+	65% max
Shipping Weight, H+ form	720 ÷ 800 g/l (46 lbs/cu.ft, approx.)
Total Exchange Capacity, H+ form	4 eq/l min.
pH Range	4 ÷ 14

Suggested Operating Conditions	
Maximum Temperature, H+ form	120ºC (248ºF) max
Minimum Bed Depth	0,8 m (30”)
Backwash Rate	50 ÷ 75% Bed Expansion
Regeneration, Hydrogen Cycle	5 ÷ 10% HCl, 0,5 ÷ 1% H2SO4
Flow Rate	2 ÷ 7 BV/h 8 ÷ 20 gpm/cu.ft)
Contact Time	At least 30 Minutes
Displacement Rinse Rate	1,4 ÷ 2 BV (10 ÷ 15 gallons/cu.ft)
Displacement Rinse Volume	1,4 ÷ 2 BV (10 ÷ 15 gallons/cu.ft)
Fast Rinse Rate	Same as Service Flow Rate
Fast Rinse Volume	16 ÷ 40 BV/h (2 ÷ 5 gpm/cu.ft)
Service Flow Rate	16 ÷ 40 BV/h (2 ÷ 5 gpm/cu.ft)

Box: WxLxH	Box: Q.ty	Box: Weight	Pallet: WxLxH	Pallet: Q.ty	Pallet: Weight

Certificates	Manufacturer	Sectors
DM174-2004	Pure Resin	Commercial, Industrial

Pure Resin PA103OH

- Gel Strong Base Anion Exchange Resin;
- It is a Type II, gel strong-base anion exchange resin, with high capacity and excellent regeneration efficiency;
- Supplied as spherical beads in the hydroxyl form;
- It removes all ions including silica and CO2, anyway, it operates best on waters having a high percentage of strong acids (FMA);
- Intended for use in all type of dealcalisation, demineralization, deionization and chemical processing applications;
- Shipped in 25 liter bags.

Ref	Description	Fam.	Subfam.		
RA340	STRONG ANION GEL TYPE II PURE RESIN PA103 (OH)	65	300		

Polymer Matrix Structure	Polystyrene crosslinked with divinylbenzene
Functional Group	R-(SO3)¯M+
Ionic Form, as shipped	Hydroxyl (OH-)
Physical Form and Appearance	Clear Spherical Beads
Sphericity	95% min
Screen Size Range US Standard Screen	16 ÷ 50 mesh, wet
Particle Size Range	+1,2 mm < 5%, - 0,3 mm < 1%
Uniformity Coefficient	1,6 max
Water Retention, Cl- form	45 ÷ 50%
Swelling Cl- → OH-	15% max
Weight, Cl- form	680 ÷ 760 g/l (44 lbs/cu.ft, approx.)
Total Exchange Capacity, Cl- form	1,3 eq/l min.
pH Range	0 ÷ 14

Suggested Operating Conditions	
Maximum Temperature, Cl- form	60ºC (140ºF) max
Maximum Temperature, OH- form	40°C (105°F) max
Minimum Bed Depth	0,6 m (24”)
Backwash Rate	50 ÷ 75% Bed Expansion
Regeneration	
Regenerant Concentration	2 ÷ 6% NaOH
Flow Rate	2 ÷ 4 BV/h (0,25 ÷ 0,50 gpm/cu.ft)
Contact Time	At least 60 Minutes
Displacement Rinse Rate	1,4 ÷ 2 BV (10 ÷ 15 gallons/cu.ft)
Displacement Rinse Volume	1,4 ÷ 2 BV (10 ÷ 15 gallons/cu.ft)
Fast Rinse Rate	Same as Service Flow Rate
Fast Rinse Rate	4 ÷ 8 BV (30 ÷ 60 gallons/cu.ft)
Service Flow Rate	10 ÷ 50 BV/h (1,25 ÷ 6,25 gpm/cu.ft)

Box: WxLxH	Box: Q.ty	Box: Weight	Pallet: WxLxH	Pallet: Q.ty	Pallet: Weight

Certificates	Manufacturer	Sectors
	Pure Resin	Industrial

Pure Resin PA201(CL)

- Macroporous Strong Base Anion Exchange Resin;
- It is a Type II, gel strong-base anion exchange resin;
- Supplied wet as spherical beads in the chloride form;
- It has a high operating capacity, especially on high-FMA feedwaters, as well as a high reversible sorptive capacity for complex organic materials, such as the fulvic and humic acids which occur in many surface water supplies;
- It is recommended for use in waters with low silica loads. For high silica waters, a type I anion resin such as Pure PA200 is recommended;
- Shipped in 25 liter bags.

Ref	Description	Fam.	Subfam.		
RA342	STRONG ANION MACROPOROUS TYPE II PURE RESIN PA201(Cl)	65	300		

Polymer Matrix Structure	Macroporous polystyrene crosslinked with divinylbenzene
Functional Group	R-N(CH3)2 (C2H4OH)+
Ionic Form, as shipped	Chloride (Cl-)
Physical Form and Appearance	Opaque light yellowish spherical beads
Sphericity	95% min
Screen Size Range US Standard Screen	16 ÷ 50 mesh, wet
Particle Size Range	+1,2 mm < 5%, - 0,3 mm < 1%
Uniformity Coefficient	1,6 max
Water Retention, Cl- form	47 ÷ 57%
Swelling Cl- → OH-	10% max
Weight, Cl- form	1,2 eq/l min.
Total Exchange Capacity, Cl - form	1,2 eq/l min.
pH Range	0 ÷ 14

Suggested Operating Conditions	
Maximum Temperature, Cl- form	60ºC (140ºF) max
Maximum Temperature, OH- form	40°C (105°F) max
Minimum Bed Depth	0,8 m (30")
Backwash Rate	50 ÷ 75% Bed Expansion
Regeneration, Regenerant Concentration	2 ÷ 5% NaOH
Service/fast rinse	5 ÷ 50 m/h (2 ÷ 20 gpm/ft2)
Co-current regeneration/displacement rinse	1 ÷ 10 m/h (0,4 ÷ 4 gpm/ft2)
Total rinse requirement	3 ÷ 5 Bed volumes
Temperature	Ambient up to 35°C (95°F) for silica removal

Box: WxLxH	Box: Q.ty	Box: Weight	Pallet: WxLxH	Pallet: Q.ty	Pallet: Weight

Certificates	Manufacturer	Sectors
	Pure Resin	Industrial

Pure Resin PA200

- It is a Type I, Macroporous Strong Base Anion Exchange Resin supplied in chloride or hydroxide and has high capacity, shock resistant with high physical stability;
- It is widely used in multiple and mixed bed demineralizers, wherever complete ion and organic removal are required;
- It is also intended for use in all types of deionization systems, condensate polishing and chemical processing applications;
- Shipped in 25 liter bags.

Ref	Description	Fam.	Subfam.		
RA341	STRONG ANION MACROPOROUS TYPE I PURE RESIN PA200(Cl)	65	300		

Polymer Matrix Structure	Macroporous polystyrene crosslinked with divinylbenzene
Functional Group	R-N(CH3)3
Ionic Form, as shipped	Chloride (Cl-)
Physical Form and Appearance	Opaque light yellowish spherical beads
Sphericity	95% min
Screen Size Range US Standard Screen	16 ÷ 50 mesh, wet
Particle Size Range	+1,2 mm < 5%, - 0,3 mm < 1%
Uniformity Coefficient	1,6 max
Water Retention, Cl- form	50 ÷ 60%
Swelling Cl- → OH-	20 ÷ 30%
Weight, Cl- form	660 ÷ 730 g/l (43 lbs/cu.ft, approx.)
Total Exchange Capacity, Cl- form	1,15 eq/l min.
Total Exchange Capacity, OH- form	0,92 eq/l min.
pH Range	0 ÷ 14

Suggested Operating Conditions	
Maximum Temperature, Cl- form	80ºC (170ºF)
Maximum Temperature, OH- form	60°C (140°F)
Minimum Bed Depth	0,6 m (24”)
Backwash Rate	50 ÷ 75% Bed Expansion
Regeneration, Regenerant Concentration	4 ÷ 6% NaOH
Service/Fast Rinse	2 ÷ 8 BV/h (0,25 ÷ 1,0 gpm/ft2)
Contact Time	Minimum 60 minutes
Displacement Rinse Rate	Same as Regenerant Flow Rate
Displacement Rinse Volume	1,4 ÷ 2,0 BV (10 ÷ 15 gallons/cu.ft)
Fast Rinse Rate	Same as Service Flow Rate
Fast Rinse Volume	4,6 ÷ 8 BV (35 ÷ 60 gallons/cu.ft)
Service Flow Rate	16 ÷ 32 BV/h (2,0 ÷ 4,0 gpm/cu.ft)

Box: WxLxH	Box: Q.ty	Box: Weight	Pallet: WxLxH	Pallet: Q.ty	Pallet: Weight

Certificates	Manufacturer	Sectors
	Pure Resin	Industrial

Pure Resin PA300

- Macroporous Weak Base Anion Exchange Resin;
- It is a macroporous polystyrene weak-base anion exchange resin having tertiary amine functionality;
- It has superior kinetics and greater resistance to oxidation and osmotic shock, high chemical and physical stability;
- Intended primarily for use in multiple bed demineralizers;
- It can be used in a two-bed system following a strong acid cation exchanger such as Pure PC003 where weak acid ions (silica and carbon dioxide) do not have to be removed;
- It can also be used in a separate bed, ahead of the strong base exchanger to remove organics and strong acid ions;
- Shipped in 25 liter bags.

Ref	Description	Fam.	Subfam.		
RA350	WEAK ANION MACROPOROUS PURE RESIN PA300	65	300		

Polymer Matrix Structure	Polystyrene crosslinked with divinylbenzene
Functional Group	R-N-(CH3)2
Ionic Form, as shipped	Free Base
Physical Form and Appearance	Spherical Beads
Sphericity	95% min
Screen Size Range US Standard Screen	16 ÷ 50 mesh, wet
Particle Size Range	+1,2 mm < 5%, - 0,3 mm < 1%
Uniformity Coefficient	1,6 max
Water Retention, Cl- form	50 ÷ 60%
Swelling Cl- → OH-	25% max.
Weight, Cl- form	650 ÷ 720 g/l (42 lbs/cu.ft, approx.)
Total Exchange Capacity, Cl- form	1,4 eq/l min.
pH Range	0 ÷ 14

Suggested Operating	
Maximum Temperature	100ºC (212ºF) max
Minimum Bed Depth	0,6 m (24")
Backwash Rate	50 ÷ 75% Bed Expansion
Regeneration	
Regenerant Concentration	2 ÷ 6% NaOH
Flow Rate	2 ÷ 8 BV/h (0,25 ÷ 1,00 gpm/cu.ft)
Contact Time	At least 60 Minutes
Displacement Rinse Rate	Same as Regenerant Flow Rate
Displacement Rinse Volume	1,4 ÷ 2 BV (10 ÷ 15 gallons/cu.ft)
Fast Rinse Rate	Same as Service Flow Rate
Fast Rinse Volume	4,9 ÷ 8 BV (35 ÷ 60 gallons/cu.ft)
Service Flow Rate	16 ÷ 32 BV/h (2,0 ÷ 4,0 gpm/cu.ft)

Box: WxLxH	Box: Q.ty	Box: Weight	Pallet: WxLxH	Pallet: Q.ty	Pallet: Weight

Certificates	Manufacturer	Sectors
	Pure Resin	Industrial

Pure Resin PA202

- Nitrate Selective Resin;
- Macroporous strong base anion exchange resin supplied in the chloride form as moist, tough, spherical beads, specially designed for the removal of nitrates from water;
- The macroporous matrix and special ion exchange group functionality imparts ideal nitrate selectivity to Pure PA202 making this resin particularly suitable for nitrate removal even when moderate to high sulphate concentrations are present;
- Shipped in 25 liter bags.

Ref	Description	Fam.	Subfam.		
RA360	STRONG ANION NITRATES SELECTIVE PURE RESIN PA202	65	300		

Polymer Matrix Structure	Macroporous, Styrene with DVB
Functional Group	R-N-R3+ Cl-
Ionic Form, as shipped	Cl-
Physical Form and Appearance	Clear Spherical Beads
Sphericity	95% min
Screen Size Range US Standard Screen	16 ÷ 50 mesh, wet
Particle Size Range	+1,2 mm < 5%, - 0,3 mm < 1%
Uniformity Coefficient	1,6 max
Water Retention, Cl- form	52 ÷ 56%
Shipping Weight	680 ÷ 730 g/l (42 ÷ 45,5 lbs/cu.ft, approx.)
Total Exchange Capacity	1,0 eq/l min.
Max Operating Temperature	100°C (212°F) max.
pH Range	0 ÷ 14

Suggested Operating Conditions	
Maximum Operating Temperature	100ºC (212ºF) max
Working Exchange Capacity 25°C	≥ 0,3 meq/l (wet)
Concentration of Regenerate Solution	NaCl: 8 ÷ 10%
Consumption of Regenerate	NaCl (8 ÷ 10%) Vol. : Resin Vol. = 2÷3 : 1
Flow Rate of Regenerate Solution	4 ÷ 6 (m/hr)
Flow Rate of Regenerate Solution	30 ÷ 60 (minute)
Rinse Flow Rate	15 ÷ 25 (m/hr)
Rinse Time (minute)	25 (approx.)
Operating Flow Rate	15 ÷ 25(m/hr)

Box: WxLxH	Box: Q.ty	Box: Weight	Pallet: WxLxH	Pallet: Q.ty	Pallet: Weight

Certificates	Manufacturer	Sectors
DM174-2004	Pure Resin	Domestic, Commercial, Industrial

Pure Resin PMB101-2

- Mixed Bed Resin;
- It is a high capacity mixed bed ion exchange resin consisting of a mixture of a gel, Type I strong base anion resin and a gel strong acid cation resin for direct water purification;
- The conductivity is around 0,1 us/cm;
- Suitable for use in regenerable or non-regenerable cartridges, for deionization with high silica removal efficiency and refine water for electrical home applications;
- Shipped in 25 liter bags.

Ref	Description	Fam.	Subfam.		
RA370	MIXED BED PURE RESIN PMB101-2	65	300		

Polymer Matrix Structure	Gel polystyrene crosslinked with DVB
Functional Group: Cation	R-SO3- H+
Functional Group: Anion	R4-N-OH-
Ionic Form, as shipped	H+ / OH-
Physical Form and Appearance	Spherical Beads
Sphericity	95% min
Screen Size Range US Standard Screen	16 ÷ 50 mesh, wet
Particle Size Range	+1,2 mm < 5%, - 0,3 mm < 1%
Volume Ratio (as shipped) Cation	40% PC003H
Volume Ratio (as shipped) Anion	60% PA101OH
Total Exchange Capacity, Cation (in Na+ form)	2,0 eq/l min.
Total Exchange Capacity, Cation (in H+ form)	1,9 eq/l min.
Total Exchange Capacity, Anion (in Cl- form)	1,0 eq/l min.
Total Exchange Capacity, Anion (in OH- form)	1,0 eq/l min.
Water Retention, H+ form	45 ÷ 50%
Water Retention, OH+ form	53 ÷ 60%
Water Retention, H+ form	700 ÷ 740 g/l (44 ÷ 46 lbs/cu.ft, approx.)
Max temperature	60°C (140°F)
pH Range	0 ÷ 14

Suggested Operating Conditions	
Minimum Bed Depth	0,6 m (24")
Service Flow Rate	20 ÷ 60 BV/h (2,5 ÷ 7,5 gpm/cu.ft)
Limitations	Extended exposure to strong oxidizers, such as chlorine, hydrogen peroxide and concentrated nitric acid, degrade the structural backbone of the resin and should be avoided

Box: WxLxH	Box: Q.ty	Box: Weight	Pallet: WxLxH	Pallet: Q.ty	Pallet: Weight

Certificates	Manufacturer	Sectors
	Pure Resin	Industrial

Pure Resin PMB102-2

- Mixed Bed Resin;
- It is a high capacity mixed bed ion exchange resin consisting of a mixture of a gel, Type I strong base anion resin and a gel strong acid cation resin for direct water purification;
- The conductivity is around 0,1 us/cm;
- Suitable for use in regenerable or non-regenerable cartridges, for deionization with high silica removal efficiency and applications for treatment of the R.O. permeate;
- Shipped in 25 liter bags.

Ref	Description	Fam.	Subfam.		
RA372	MIXED BED PURE RESIN PMB102-2 (REFINING PERMEATEWATER)	65	300		

Polymer Matrix Structure	Gel polystyrene crosslinked with DVB
Polymer Matrix Structure: Cation	R-SO3- H+
Polymer Matrix Structure: Anion	R4-N-OH-
Ionic Form, as shipped	H+ / OH-
Ionic Form, as shipped	Spherical Beads
Sphericity	95% min
Screen Size Range US Standard Screen	16 ÷ 50 mesh, wet
Particle Size Range	+1,2 mm < 5%, - 0,3 mm < 1%
Volume Ratio (as shipped): Cation	40% PC003H
Volume Ratio (as shipped): Anion	60% PA102OH
Total Exchange Capacity, (Cation (in Na+ form)	2,0 eq/l min.
Total Exchange Capacity, Cation (in H+ form)	1,9 eq/l min.
Total Exchange Capacity, Anion (in Cl- form)	1,3 eq/l min.
Total Exchange Capacity, Anion (in OH- form)	1,0 eq/l min.
Water Retention, H+ form	45 ÷ 50%
Water Retention, OH+ form	48 ÷ 58%
Shipping Weight (Approx.)	700 ÷ 740 g/l (44 ÷ 46 lbs/cu.ft, approx.)
Max temperature: Non-regenerative bed	100°C (212°F)
Max temperature: Regenerative bed	60°C (140°F)
pH Range	0 ÷ 14

Suggested Operating Conditions	
Minimum Bed Depth	0,6 m (24")
Service Flow Rate	20 ÷ 60 BV/h (2,5 ÷ 7,5 gpm/cu.ft)
Limitations	Extended exposure to strong oxidizers, such as chlorine, hydrogen peroxide and concentrated nitric acid, degrade the structural backbone of the resin and should be avoided

Box: WxLxH	Box: Q.ty	Box: Weight	Pallet: WxLxH	Pallet: Q.ty	Pallet: Weight

Certificates	Manufacturer	Sectors
	Pure Resin	Industrial

Pure Resin PMB101-3

- Mixed Bed Resin;
- It is a high capacity mixed bed ion exchange resin consisting of a mixture of a gel, Type I strong base anion resin and a gel strong acid cation resin for direct water purification;
- The conductivity is around 0,06 us/cm;
- Suitable for use in regenerable or non-regenerable cartridges, for deionization with high silica removal efficiency and ultrapure water production applications;
- Shipped in 25 liter bags.

Ref	Description	Fam.	Subfam.		
RA374	MIXED BED PURE RESIN PMB101-3 (PURE WATER 12 - 16MOhm)	65	300		

Polymer Matrix Structure	Gel polystyrene crosslinked with DVB
Functional Group: Cation	R-SO3- H+
Functional Group: Anion	R4-N-OH-
Ionic Form, as shipped	H+ / OH-
Physical Form and Appearance	Spherical Beads
Sphericity	95% min
Screen Size Range US Standard Screen	16 ÷ 50 mesh, wet
Particle Size Range	+1,2 mm < 5%, - 0,3 mm < 1%
Volume Ratio (as shipped) Cation	40% PC003H
Volume Ratio (as shipped) Anion	60% PA101OH
Total Exchange Capacity, Cation (in Na+ form)	2,0 eq/l min.
Total Exchange Capacity, Cation (in H+ form)	1,9 eq/l min.
Total Exchange Capacity, Anion (in Cl- form)	1,3 eq/l min.
Total Exchange Capacity, Anion (in OH- form)	1,0 eq/l min.
Water Retention, H+ form	45 ÷ 50%
Water Retention, OH+ form	53 ÷ 60%
Shipping Weight (Approx.)	700 ÷ 740 g/l (44 ÷ 46 lbs/cu.ft, approx.)
Max temperature: Non-regenerative bed	100°C (212°F)
Max temperature: Regenerative bed	60°C (140°F)
pH Range	0 ÷ 14

Suggested Operating Conditions	
Minimum Bed Depth	0,6 m (24”)
Service Flow Rate	20 ÷ 60 BV/h (2,5 ÷ 7,5 gpm/cu.ft)
Limitations	Extended exposure to strong oxidizers, such as chlorine, hydrogen peroxide and concentrated nitric acid degrade the structural backbone of the resin and should be avoided.

Box: WxLxH	Box: Q.ty	Box: Weight	Pallet: WxLxH	Pallet: Q.ty	Pallet: Weight

Certificates	Manufacturer	Sectors
	Pure Resin	Industrial

Pure Resin PS400

- Selective removal of polyvalent ions;
- Macroporous Weak Acid Cation Exchange Resin;
- it is based on the iminodiacetatic acid functional group, which has chelating properties for heavy metal ions even against high concentrations of calcium;
- It finds use in processes for extraction and recovery of metals from ores, galvanic plating solutions, picking baths and effluents;
- Shipped in 25 liter bags.

Ref	Description	Fam.	Subfam.		
RA376	WEAK CATION POLYVALENT IONS SELECTIVE PURE RESINPS400	65	300		

Polymer Matrix Structure	Macroporous, Styrene / DVB
Functional Group	Iminodiacetatic
Functional Group	Na+
Physical Form and Appearance	Milky White Spherical Beads
Sphericity	95% min
Screen Size Range US Standard Screen	16 ÷ 50 mesh, wet
Particle Size Range	0,30 ÷ 1,20 mm ≥ 95
Uniformity Coefficient	1,6 max.
Water Retention, Na+ form	55 ÷ 65%
Reversible Swelling H+ → Na+	40% max.
Shipping Weight	720 ÷ 780 g/l (45 lbs/cu.ft, approx.)
Total Exchange Capacity, Na+ form	≥ 1.0 meq/ml
pH Range	6 ÷ 11

Suggested Operating Conditions	
Maximum Temperature, H+ form	100ºC (212ºF) max.
Operating Flow Rate	15 ÷ 45 (m/hr)
Method of Regeneration	pass 1 eq/l HCl 2~4 BV in 1~1,5 hours, rinse with DI water or soft water until pH = 3~4; pass 1 eq/l NaOH 2~4 BV in 1,5~2 hours, rinse with DI water or soft water until pH = 9

Box: WxLxH	Box: Q.ty	Box: Weight	Pallet: WxLxH	Pallet: Q.ty	Pallet: Weight

Certificates	Manufacturer	Sectors
DM174-2004	Pure Resin	Industrial

Greensand Plus

- Filter media used for removing soluble iron, manganese, hydrogen sulphide, arsenic and radium from well water supplies;
- The Manganese Greensand Plus has a manganese dioxide coated surface that acts as a catalyst in the oxidation-reduction of iron and manganese;
- The silica sand core allows to better withstand operating conditions in waters that are low in silica, TDS and hardness;
- A pre-filtration with sand and anthracite is recommended;
- The Manganese Greensand Plus can be used in CR (continuous regeneration) or IR (intermittent regeneration) and requires no changes in backwash rate or times or chemical feeds;
- The removal of iron and manganese can be made by using oxidant as chlorine, even in the presence of manganese;
- Not shipped in regenerated form; prior to use it is necessary to regenerate with a solution of potassium permanganate contacting the bed for a minimum of 4 hours. A regeneration level of 4 g of potassium permanganate per liter is recommended. Before placing in service the filter must be rinsed of all remaining traces of potassium permanganate;
- Dosage Cl2 (mg/l) = 1 mg/l Fe + 3 mg/l Mn + 6 mg/l H2S + 8 mg/l NH3 for service flow rate continuous;
- Available in 14,2 liters bags.

Ref	Description	Fam.	Subfam.		
RA074	MANGANESE GREENSAND PLUS BAG 14,2 LT	65	315		

Physical properties		Operating conditions	
Colour	black	pH range	6,2 ÷ 8,8
Specific gravity (g/l)	2400	Service flow rate continuous / intermittent (m3/h m2)	12 ÷ 29
Bulk density (g/l)	1410	Backwash flow rate @13°C (m3/h m2)	30
Effective size (mm)	0,30 ÷ 0,35	Backwash bed expansion (%)	35 ÷ 40
Uniform coefficient	1,6	Pressure drop (psi)	10 ÷ 18

Recommended Operating Guidelines	Intermittently Regeneration (IR)	Recommended Operating Guidelines	
Minimum bed depth (mm)	750 single media:380 each for dual media beds	Minimum bed depth (mm)	500 Greensand Plus and 380 Anthracite
Backwash Duration	10 minutes (until water is CLEAR)	Backwash Duration	10 minutes (until water is clear)
Regenerant Dosage 6,5% Bleach	65 liters / m3 diluted in approx. 25 liters of water injected over 30 ÷ 40 minutes		
Regenerant Dosage 12% Bleach	25 liters / m3 diluted in approx. 25 liters of water injected over 30 ÷ 40 minutes		

Box: WxLxH	Box: Q.ty	Box: Weight	Pallet: WxLxH	Pallet: Q.ty	Pallet: Weight

Certificates	Manufacturer	Sectors
NSF61		Domestic, Commercial, Industrial

MTM

- MTM consist of a light weight granular core with a coating of manganese dioxide, and is used for reducing iron, manganese and hydrogen sulphide from water. Its active surface coating oxidizes and precipitate soluble iron and manganese, and hydrogen sulphide is oxidized to a sulphur. The precipitates are filtered out in the granular bed and removed by backwashing;
- Compared to other iron removal medias, MTM has many advantages: pH level as low as 6,2 can be treated, dissolved oxygen is not essential, the media light weight reduces backwash water requirements;
- Chlorine can be beneficial in extending filter run times;
- MTM requires intermittent or continuous regeneration to maintain its oxidizing capacity, with a weak solution of potassium permanganate;
- Regeneration KMnO4 solution from 1,5 to 2 g per liter MTM;
- A new bed should be regenerated at the start up;
- CAUTION: operating the filter after its oxidizing capacity is exhausted will reduce its service life and may cause staining;
- Influent limitations: none oil and polyphosphates;
- Available in 28,3 liters bags.

Ref	Description	Fam.	Subfam.		
RA071	MTM BAG 28.3 LT.	65	315		

PHYSICAL PROPERTIES		OPERATING CONDITIONS	
Colour	dark brown	Bed depth (mm)	600 ÷ 900
Specific gravity (g/l)	2000	Service flow rate (m3/h m2)	8 ÷ 13
Bulk density (g/l)	715	Backwash flow rate (m3/h m2)	20 ÷ 24
Effective size (mm)	0,45	Backwash bed expansion (%)	20 ÷ 40
		Capacity per liter (g)	1,4 Fe or 0,7 Mn
		pH range	6,2 ÷ 8,5

Box: WxLxH	Box: Q.tà	Box: Weight	Pallet: WxLxH	Pallet: Q.tà	Pallet: Weight

Certificates	Manufacturer	Sectors
NSF61	Clack	Domestic, Commercial, Industrial

BIRM

- Granular filter media used for the reduction of iron and manganese dissolved in the water. In ground water the dissolved iron is usually in the ferrous bicarbonate state and is not filterable; BIRM acts as an insoluble catalyst to enhance the reaction between dissolved oxygen and iron compounds, producing ferric hydroxide which precipitates and may be easily filtered;
- The physical characteristics of BIRM provide an excellent filter media which is easily cleaned by backwashing to remove the precipitant;
- BIRM is not consumed in the iron removal operation;
- Available in 28,3 liters bags;
- Following are the conditions necessary for a good efficiency of the BIRM:
- No Oil, Hydrogen Sulphide and Polyphosphates in the water;
- pH 6,8 ÷ 9,0 (if water contains also manganese pH has to be 8,0 ÷ 8,5);
- Dissolved oxygen content must be equal to at least 15% of the iron content and 29% of the manganese content;
- Alkalinity should be greater than two times the combined sulphate and chloride concentration;
- Less than 5 ppm TOC.

Ref	Description	Fam.	Subfam.		
RA072	BIRM REGULAR BAG 28.3 LT.	65	315		

PHYSICAL PROPERTIES		OPERATING CONDITIONS	
Colour	black	Bed depth (mm)	750 ÷ 900
Specific gravity (g/l)	2000	Service flow rate (m3/h m2)	9 ÷ 13
Bulk density (g/l)	560 ÷ 640	Backwash flow rate (m3/h m2)	24 ÷ 30
Mesh Size	12 x 50	Backwash bed expansion (%)	20 ÷ 40
Effective Size (mm)	0,48		
Uniform Coefficient	2,7		

Box: WxLxH	Box: Q.ty	Box: Weight	Pallet: WxLxH	Pallet: Q.ty	Pallet: Weight

Certificates	Manufacturer	Sectors
NSF61	Clack	Domestic, Commercial, Industrial

Pyrolusite

- PYROLUSITE is manganese dioxide (MnO2) of very good quality and pureness obtained by washing, drying and screening of mineral selected for the specific catalytic activity;
- Used as catalyser for the reduction of iron and manganese dissolved in the water, by sand filters, mixed 20÷50 % with sand 0,4÷0,8 / 0,7÷1,2 mm;
- Does not require a compulsory regeneration with KMnO4 , but you can do a continuous chlorination or a chlorination during the backwash;
- Hardness 3° ÷ 5° Mosh;
- Available in 25 kg bags.

Ref	Description	Fam.	Subfam.		
RA069	MWG PYROLUSITE (MANGANESE DIOXIDE) BAG 25 KG	65	315		

Physical Properties	
Colour	brown
Bulk density (g/l)	2000
Effective size (mm)	0,35 ÷ 0,85
Mn (%)	80

Operating Conditions	
Composition	Mixed 20÷50 % with sand 0,4÷0,8 / 0,7÷1,2 mm
Suggested filtration speed (m/h)	≤ 10
Max backwash speed (m3/h m2)	25
Backwash expansion at 25 m/h (%)	25
Min contact time (min)	6
Range pH	6,5 ÷ 8,5

Box: WxLxH	Box: Q.ty	Box: Weight	Pallet: WxLxH	Pallet: Q.ty	Pallet: Weight

Certificates	Manufacturer	Sectors
STANDARD EN 13752	**MWG**	Domestic, Commercial, Industrial

Activated Carbon

- RA204 activated carbon is not suitable for treatment of water intended for human consumption;
- In granular form;
- Suitable for Chlorine, chemical oxidants, chlorinated compounds and organic contaminants dissolved in water;
- activated carbon require periodic backwashing to eliminate accumulated suspended matters and to regrade the filter bed;
- A good backwashing of the AC filter bed of the start-up is required.
- Mainly bituminous origin coal activated carbons are carefully selected, with a thermal activation process at strictly controlled temperature to obtain a large surface area and a mesoporous structure allowing the adsorption of high molecular weight organic compounds in particular hydrocarbons, atrazine, surfactants;

- Mainly vegetal (coconut base) activated carbons are suitable for applications that need good resistance to the attrition and mechanical shocks; they have a microporous structure allowing the adsorption of low molecular weight organic compounds in particular trichloroethylene, tetrachloroethylene.

Ref	Description	Fam.	Subfam.		
RA204	MWG BAG 25 KG CARB. CYLINDRICAL MIN. SC 45 (47 LT. ABOUT)	65	305		
RA201	MWG BAG 25 KG CARB. MIN. GAC 830 M (52 LT.ABOUT)	65	305		
RA202	MWG BAG 25 KG CARB. MIN. GAC 1240 M (52 LT. ABOUT)	65	305		
RA214	BAG 25 KG CARB.MIN. NORIT GAC 1240 W	65	305		
RA206	MWG BAG 25 KG CARB. GAC 8X30 VEGETAL	65	305		
RA208	MWG BAG 25 KG CARB. GAC 12X40 VEGETAL	65	305		

Ref	Type	Origin	Size(mm)	Bulk density (g/l)	Bet (m^2/g)	Iodine number (mg/g)	Ash content (%)
RA204	SC45 cylindrical	Mineral	4	530	700	750	12
RA201	GAC 8x30	Mineral	0,6 ÷ 2,4	480	1100	1000	12
RA202	GAC 12x40	Mineral	0,4 ÷ 1,7	480	1100	1000	12
RA214	Norit GAC 12x40	Mineral	0,4 ÷ 1,7	500	1100	950	12
RA206	GAC 8x30	Vegetal	0,6 ÷ 2,4	500	1250	1100	3
RA208	GAC 12x40	Vegetal	0,4 ÷ 1,7	500	1250	1100	3

Operating conditions	
Bed depth (mm) (dechlorination)	650 ÷ 750
Service flow rate (m3/h m2) (dechlorination)	12 ÷ 15
Backwash flow rate (m3/h m2)	24 ÷ 30
Backwash bed expansion (%)	30 ÷ 40

Box: WxLxH	Box: Q.ty	Box: Weight	Pallet: WxLxH	Pallet: Q.ty	Pallet: Weight

Certificates	Manufacturer	Sectors
STANDARD EN 12915-1:2004 (except RA204)	**MWG**	Commercial, Industrial

Acid Washed Activated Carbon

- High quality granular activated carbon produced by physical activation of selected raw material of mineral origin;
- It is further washed with acid in order to reduce the ash content;
- Particularly effective for the removal of organic pollutants, dyes, pesticides, chlorinated and aromatic solvents, phenols, tannins, chlorine derivatives and compounds that cause bad smells and tastes in drinking water;
- Suitable for different applications such as the purification of water intended for human consumption, the purification of wastewater, of process and condensates. It is also used in the purification and discoloration processes of intermediates chemical and food products;
- It can be thermally reactivated once its adsorbing capacity is exhaust;
- Available in 25 kg bags.

Ref	Description	Fam.	Subfam.		
RA222	MWG BAG 25 KG CARB. GAC 12X30 MINERAL ACID WASHED	65	305		

GENERAL PROPERTIES			
Iodine number	Astm D 4607	mg / g	1.000
Moisture as packed	Astm D 2867	%	2
Size	Astm D 2862	Mesh	12 x 30
Methylene blue index	12 Mesh / 30 Mesh	%	5 - 5
Indice Blu di Metilene	Cefic Dab VI	ml	18
CCl4 adsorption	Astm D 3467	%	60
Surface area (B.E.T.)	Astm D 3663	m^2/g	1.100
Bulk density	Astm D 2854	kg/m^3	460
Density after back-washing and draining		kg/m^3	420
Iron (acid extraction)		ppm	300
Hardness	Astm D 3802	%	95
Ash content	Astm D 2866	%	8
pH	Astm D 3838	-	neutral

Box: WxLxH	Box: Q.ty	Box: Weight	Pallet: WxLxH	Pallet: Q.ty	Pallet: Weight

Certificates	Manufacturer	Sectors
STANDARD EN 12915	**MWG**	Domestic, Commercial, Industrial

Filter Sand and Gravel

- REF. RA049, RA050, RA051, RA052 and RA053;
- Filter sand and gravel shape of alluvium origin, uncrushed;
- High contents of silica, selected for specific use in water filtration for potable and industrial application;
- Hardness 7° Mosh.

Ref	Description	Fam.	Subfam.		
RA049	QUARTZ SAND 0.4 - 0.8 BAG 25 KG	65	310		
RA050	QUARTZ SAND 0.8 - 1.2 BAG 25 KG	65	310		
RA051	QUARTZ SAND 1 - 2 BAG 25 KG	65	310		
RA053	QUARTZ SAND 2 - 3 BAG 25 KG	65	310		
RA052	QUARTZ SAND 3 - 5 BAG 25 KG	65	310		

Ref	Description	SIZE (mm)
RA049	QUARTZ SAND 0.4 - 0.8 BAG 25 KG	0,4 ÷ 0,8
RA050	QUARTZ SAND 0.8 - 1.2 BAG 25 KG	0,8 ÷ 1,2
RA051	QUARTZ SAND 1 - 2 BAG 25 KG	1,0 ÷ 2,0
RA053	QUARTZ SAND 2 - 3 BAG 25 KG	2,0 ÷ 3,0
RA052	QUARTZ SAND 3 - 5 BAG 25 KG	3,0 ÷ 5,0

Physical properties	
Colour	white
Specific gravity (g/l)	2650
Bulk density (g/l)	1500
SiO2 content	> 96 %
Humidity	0,3 % max
Melting point	1700 g/c
pH	8

Operating conditions	
Bed depth (mm) (sand filter)	450 ÷ 750
Service flow rate (m3/h m2)	8 ÷ 12
Backwash flow rate (m3/h m2)	30 ÷ 42
Backwash bed expansion (%)	5 ÷ 10

Box: WxLxH	Box: Q.ty	Box: Weight	Pallet: WxLxH	Pallet: Q.ty	Pallet: Weight

Certificates	Manufacturer	Sectors
STANDARD EN 12904		Domestic, Commercial, Industrial

Anthracite

- Granular anthracite selected per gradation, hardness and purity for specific use in potable and industrial water filtration;
- The high filtering efficiency of anthracite is due to its angular shape, that allows high filtering speed, longer filter runs and less head loss;
- Excellent media with density lower than sand, the anthracite is usually used in multimedia filters;
- Minimum carbon contents 90%, low silica, hardness 3° Mosh average.

Operating conditions:

- Monolayer bed depth 600 ÷ 900 mm;
- Top bed depth in multilayer beds 250 ÷ 450 mm;
- Service flow rate following specific conditions;
- Backwash flow rate 28 ÷ 35 m3/h m2;
- Bed expansion 20 ÷ 30%.

Ref	Description	Fam.	Subfam.		
RA060	ANTHRACITE 0.6 - 1.0 BAG 25 KG	65	310		
RA061	ANTHRACITE 2 - 3 BAG 25 KG.	65	310		

Ref	Description	SIZE (mm)
RA060	ANTHRACITE 0.6 - 1.0 BAG 25 KG	0,6 ÷ 1,0
RA061	ANTHRACITE 2 - 3 BAG 25 KG.	2,0 ÷ 3,0

Physical properties	
Bulk density (g/l)	950
Absolute density (g/l)	1400
Humidity packaging	2 % max
Ashes	4 % (±2)
Substances volatiles	3 % (±1)
Sulphur	0,5 % max
pH	8 ÷ 10

Box: WxLxH	Box: Q.ty	Box: Weight	Pallet: WxLxH	Pallet: Q.ty	Pallet: Weight

Certificates	Manufacturer	Sectors
STANDARD EN 12909		Domestic, Commercial, Industrial

Calcite

- CALCITE is a natural crushed and screened calcium carbonate media which is used to neutralize low pH waters;
- Acidic water slowly dissolves the calcium carbonate to raise the pH which reduces the potential leaching of copper, lead and other metals found in typical plumbing systems;
- One of the advantages of CALCITE is its self-limiting property, that corrects pH only enough to reach a non corrosive equilibrium;
- Of course CALCITE will increase the hardness of the water;
- Periodic backwashing of the bed is necessary to keep in working order the system;
- The CALCITE bed will have to be periodically replenished as the CALCITE is depleted;
- Gravel support bed is recommended;
- Available in 15,6 liters bags.

Ref	Description	Fam.	Subfam.		
RA073	CALCITE BAG 15.6 LT.	65	320		

Physical properties	
Colour	white
Specific gravity (g/l)	2700
Bulk density (g/l)	1450
Effective size (mm)	0,4 ÷ 1,1
Composition	$CaCO_3$ 95% min. $MgCO_3$ 3% max
Operating conditions	
Bed depth (mm)	600 ÷ 750
Service flow rate (m3/h m2)	7 ÷ 15
Backwash flow rate ($m^3/h\ m^2$)	20 ÷ 30
Backwash bed expansion (%)	≥ 50
pH range	5,0 ÷ 7,0

Box: WxLxH	Box: Q.ty	Box: Weight	Pallet: WxLxH	Pallet: Q.ty	Pallet: Weight

Certificates	Manufacturer	Sectors
NSF60		Domestic, Commercial, Industrial

Filter AG

- Filter-Ag is a non-hydrous silicon dioxide media which can be used as highly efficient filter media for the reduction of suspended matter. Its fractured edges and irregular surface provides an high surface area and complex flow path for efficient filtration;
- Less pressure loss through a bed of Filter-Ag than through most other filter medias;
- Light weight requires lower backwash rates than other filter medias;
- Upon installation allow bed to soak overnight before backwashing;
- Available in 28,3 liters bags.

Ref	Description	Fam.	Subfam.		
RA059	FILTER AG - BAG 28,3 LT	65	310		

Physical properties	
Colour	light grey
Specific gravity (g/l)	2250
Specific gravity (g/l)	380 ÷ 420
Effective size (mm)	0,5 ÷ 2,0

Operating conditions	
Bed depth (mm)	600 ÷ 900
Service flow rate (m3/h m2)	12 ÷ 13
Backwash flow rate (m3/h m2)	20 ÷ 24
Backwash bed expansion (%) of bed depth	20 ÷ 40
Freeboard of bed depth (%)	≥ 50

Box: WxLxH	Box: Q.ty	Box: Weight	Pallet: WxLxH	Pallet: Q.ty	Pallet: Weight

Certificates	Manufacturer	Sectors
NSF61	Clack	Domestic, Commercial, Industrial

Filter AG Plus

- Filter-Ag Plus is a clinoptilolite natural media with a large surface area and microporous structure which can be used as highly efficient filter media for the reduction of suspended matter. Its irregular surface and 3 micron void spaces provides a surface area over 100 times greater than silica sand;
- Its low pressure drop, high service flow rates and high bed loadings combined with lower backwash frequency allow economy in equipment downsizing and reduced pumping requirements;
- Utilizing deep bed filtration can tipically reduce suspended solids down to 5 micron or less range;
- Filter Ag Plus can be applied to systems designed for either pressure or gravity flow;
- Available in 28,3 liters bags.

Ref	Description	Fam.	Subfam.		
RA058	FILTER AG PLUS - BAG 28,3 LT	65	310		

Physical properties	
Colour	White to off white
Specific gravity (g/l)	2200
Bulk density (g/l)	800
Effective size (mm)	0,55

Operating conditions	
Bed depth (mm)	600 ÷ 1200 (900 for optimal filtration)
Service flow rate (m3/h m2)	30 ÷ 50
Backwash flow rate (m3/h m2)	35 ÷ 45
Backwash bed expansion (%) of bed depth	30 ÷ 40
Freeboard of bed depth (%)	≥ 50

Box: WxLxH	Box: Q.ty	Box: Weight	Pallet: WxLxH	Pallet: Q.ty	Pallet: Weight

Certificates	Manufacturer	Sectors
NSF61	Clack	Domestic, Commercial, Industrial

GFH (Granular Ferric Hydroxide)

- Granular ferric hydroxide GFH is an adsorbent for selective removal of arsenic (both arsenite and arsenate), phosphate, vanadium, antimony, lead, uranium, molybdenum and other heavy metals from natural water;
- Preoxidation is not required for arsenic removal applications;
- Once the media has exhausted its adsorption capacity, it is removed from the vessel and replaced with new media;
- The simplicity of this process is very attractive for small installations and wellhead applications;
- Active substance Fe(OH)3 + β-FeOOH;
- Dry solids content 58% (± 10%).

Requirements for raw water

- Free of turbidity
- Positive redox potential
- No calcium precipittion

Ref	Description	Fam.	Subfam.		
RA068	GRANULAR FERRIC HYDROXIDE DRUM 30 KG	65	315		

Physical properties (with water content 45%):	
Density of grains (g/l)	1590
Bulk density (g/l) backwashed	1150 (± 10%)
Particle size range (mm)	0,2 ÷ 2,0
Specific surface (m2/g) (BET method)	circa 300
Porosity of grains (%)	72 ÷ 77
Bulk porosity (%)	22 ÷ 28
Iron content, relative to dry solids	600g / Kg (± 10%)

Operating conditions	
Bed depth (m)	0,8 ÷ 1,6
Specific flow rate (m3/h m2)	5 ÷ 20
Specific flow rate (m3/h m2)	3 ÷ 6
Backwash flow rate (m3/h m2)	26
Expansion free volume (%) of bed depth	50
Pressure loss max (bar)	0,5
Operation temperature max (°C)	60
AsO4 3- Arsenic adsorption density in the drinking water processing (g/kg)	2 ÷ 10 (*)
(*) the adsorption density depends on pH and water chemistry.	

Box: WxLxH	Box: Q.ty	Box: Weight	Pallet: WxLxH	Pallet: Q.ty	Pallet: Weight

Certificates	Manufacturer	Sectors
STANDARD EN 15029 NSF61		Domestic, Commercial, Industrial

Ecomix

- ECOMIX is a granular filtering media, suitable for remove natural organic matter, hardness, iron, manganese and ammonia in a wide pH range and without any oxidant products dosage;
- ECOMIX is a homogeneous mixture of five high quality ion-exchange and adsorption materials of natural and synthetic origin;
- You can use ECOMIX as a ion-exchange resin and regenerate it with sodium chloride (NaCl);
- Wide range of raw water as indicated in the “Limit Concentration
- Table” below;
- ECOMIX can treat water with high concentration of Fe and Mn, and with max TDS = 4000 mg/l;
- To calculate filter capacity, one should only consider water hardness and ion-exchange capacity (don’t consider Fe and Mn data);
- NSF/ANSI 44, 61 & 372 certified;
- Shipping weight 0,75 kg / liter;
- Available in 12,0 or 25,0 liters bags.
- ECOMIX A is preferred when the contaminats to be removed are mainly Ammonia, Hardness, Iron and Manganese, and you have a little quantity of organic matter;
- ECOMIX C is preferred when the contaminats to be removed are mainly Ammonia, Hardness, Iron and Manganese, and you have a big quantity of organic matter;
- ECOMIX P is preferred when the contaminats to be removed are mainly Hardness, Iron and Manganese;
- **Warning**: if you use only a part of the product contained in a bag, you have make sure that all the contents are mixed, in order to homogenize the product before spilling. ECOMIX is a mixture of five materials with different specific weight and different particle size, which if not well mixed tends to stratify.

Ref	Description	Fam.	Subfam.		
RA080	FILTER MEDIA ECOMIX - A (BAG 12 LT.)	65	315		
RA080A	FILTER MEDIA ECOMIX - A (BAG 25 LT.)	65	315		
RA081	FILTER MEDIA ECOMIX - C (BAG 12 LT.)	65	315		
RA081A	FILTER MEDIA ECOMIX - C (BAG 25 LT.)	65	315		
RA082	FILTER MEDIA ECOMIX - P (BAG 12 LT.)	65	315		
RA082A	FILTER MEDIA ECOMIX - P (BAG 25 LT.)	65	315		

Ref	Ion exchange capacity (eq/l)	Ion exchange capacity (g CaCO3/l)	Dose of rigenerant (g of NaCl 100% per liter)
RA080	0,75	35	100
RA080A	0,75	35	100
RA081	0,65	30	100
RA081A	0,65	30	100
RA082	0,80	40	100
RA082A	0,80	40	100

Certificates	Manufacturer	Sectors
NSF44 NSF61 NSF372		Domestic, Commercial, Industrial

Ecomix

Limit Concentration Tables

ECOMIX A	Hardness (ppm CaCO3)	Fe (mg/l) (ppm)	Mn (mg/l) (ppm)	COD (ppm O2)	Ammonia (mg/l) (ppm)	TDS (ppm)
Raw water concentration limits	< 750	< 15	< 3	< 20	< 4	< 4000
Quality of purified water	≤ 20	< 0,3	< 0,1	< 10	< 0,5	No changes

ECOMIX C	Hardness (ppm CaCO3)	Fe (mg/l) (ppm)	Mn (mg/l) (ppm)	COD (ppm O2)	Ammonia (mg/l) (ppm)	TDS (ppm)
Raw water concentration limits	< 750	< 10	< 3	< 20	< 4	< 4000
Quality of purified water	≤ 20	< 0,3	< 0,1	< 4	< 0,5	No changes

ECOMIX P	Hardness (ppm CaCO3)	Fe (mg/l) (ppm)	Mn (mg/l) (ppm)	COD (ppm O2)	Ammonia (mg/l) (ppm)	TDS (ppm)
Raw water concentration limits	< 750	< 10	< 3	N.A.	N.A.	< 4000
Quality of purified water	≤ 20	< 0,3	< 0,1	N.A.	N.A.	No changes

Operating conditions		Unit of measurement
Maximum operating temperature	40	°C
pH range	5 ÷ 9	
Minimum bed depth	500	mm
Optimum bed depth	800	mm
Service flow rate	10 ÷ 25	$m^3/h\ m^2$
Backwash flow rate (15÷20 min)	10 ÷ 15	$m^3/h\ m^2$
Regeneration flow rate (45÷65 min)	3 ÷ 5	$m^3/h\ m^2$
Active chlorine	< 1	mg/l (ppm)
Free bed volume	≥ 40	%

Commonly used pressure vessels:

	8x35	8x44	10x35	10x54	12x52	13x54	14x65	16x65	21x60
Volume of Ecomix (Liters)	16	20	24	36	48	60	72	96	144
Flow Capacity (m^3/h)@ 25 m/h	0,8	0,8	1,2	1,2	1,8	2,0	2,5	3,0	5,5
IX Capacity (kg CaCO3)	0,56	0,7	0,8	1,3	1,7	2,1	2,5	3,3	5,0
Salt Requirement (kg)	1,6	2,0	2,4	3,6	4,8	6,0	7,2	9,6	14,4
Backwash Flow Rate (m^3/h)	0,4	0,4	0,6	0,6	0,9	1,1	1,2	1,6	2,7

Corosex

- Corosex is designed for use in filters to neutralize acidity by increasing the pH value;
- By neutralizing the free carbon dioxide in water, Corosex can correct acidic water conditions and render it less corrosive. Corosex, being a highly reactive magnesium oxide, is used most effectively where pH correction is substantial or high flow conditions are in use. pH correction and media consumption are affected by a number of water chemical variables. Being soluble to acidity, Corosex will slowly dissolve and will need to be replenished periodically;
- On a per weight basis, magnesium oxide can neutralize five times more acidity than can calcium carbonate. This results in greatly reduced chemical usage for the same pH correction. Please note; under certain low flow conditions, Corosex may overcorrect and create a highly basic (high pH) condition;
- Under certain hardness conditions, pH correction can cause hardness minerals to precipitate out of solution, resulting in cementing or solidification of the Corosex mineral bed. Upflow service is generally recommended with hardness exceeding 9 °F. Always use an in-line filter ahead of an upflow system to prevent plugging of the lower distribution screen;
- As Corosex's magnesium oxide neutralizes the water, it will increase hardness and a softener may become necessary after the neutralizing filter;
- Corosex can be effectively combined with Calcite to combine the high flow neutralization properties of Corosex, along with the slower reacting low flow properties of Calcite, reducing potentially high basic properties due to overcorrection;
- High degree of activity and speed of correction allowing high flow;
- High capacity...less chemical usage;
- Available in 18,7 liters bags.

Ref	Description	Fam.	Subfam.		
RA075	COROSEX BAG 18.7 LT.	65	315		

Physical properties	
Colour	Brownish white
Specific gravity (g/l)	3600
Bulk density (g/l)	1200
Effective size (mm)	1,4
Uniformity coefficient	1,7
Composition	MgO 97% min.
Mesh size	6 x 16

Operating conditions	
Bed depth (mm)	600 ÷ 750
Service flow rate ($m^3/h\ m^2$)	12 ÷ 15
Backwash flow rate ($m^3/h\ m^2$)	25 ÷ 30
Backwash bed expansion (%)	≥ 50
pH range	4,5 ÷ 6,0

Box: WxLxH	Box: Q.ty	Box: Weight	Pallet: WxLxH	Pallet: Q.ty	Pallet: Weight

Certificates	Manufacturer	Sectors
NSF60	Clack	Domestic, Commercial, Industrial

EUROTROL®
WATER TREATMENT COMPONENTS

Residential R.O. components

Back to index

In-Line Cartridges

- IN LINE cartridges ¼" NPT F connections;
- Max pressure = 100 psi (7 bar);
- Max temperature = 35°C;

Ref	Description	Fam.	Subfam.		
DE028	MWG IN-LINE ACTIVATED CARBON CARTRIDGE 10″ x 2″	30	175		
DE029	MWG IN-LINE SEDIMENT CARTRIDGE 10″ x 2″	30	175		

Ref	Diameter (inch)	Lenght (inch)	Version	Flow (gpm)
DE028	2"	10"	Coconut Shell Activated Carbon	0,75
DE029	2"	10"	Sediment	0,75

Box: WxLxH	Box: Q.ty	Box: Weight	Pallet: WxLxH	Pallet: Q.ty	Pallet: Weight

Certificates	Manufacturer	Sectors
DM174-2004	**MWG**	Domestic

Ref	Description	Fam.	Subfam.		
DE030	MWG IN-LINE ACTIVATED CARBON CARTRIDGE 11″ x 2.1/2″	30	175		
DE031	MWG IN-LINE SEDIMENT CARTRIDGE 11″ x 2.1/2″	30	175		

Ref	Diameter (inch)	Lenght (inch)	Version	Flow (gpm)
DE030	2½"	11"	Coconut Shell Activated Carbon	0,75
DE031	2½"	11"	Sediment	1,00

Box: WxLxH	Box: Q.ty	Box: Weight	Pallet: WxLxH	Pallet: Q.ty	Pallet: Weight

Certificates	Manufacturer	Sectors
DM174-2004	**MWG**	Domestic

Clips - Valves - Tubing

Single Mounting Clips: PP material - white colour.

Ref	Description	Fam.	Subfam.		
DE033	MWG SINGLE CLIP 2″	30	175		
DE034	MWG SINGLE CLIP 2.5″	30	175		
DE006	MWG SINGLE CLIP 3″	30	175		

Ref	Description	Diameter (mm)
DE033	MWG SINGLE CLIP 2″	50
DE034	MWG SINGLE CLIP 2.5″	60
DE006	MWG SINGLE CLIP 3″	90

Certificates	Manufacturer	Sectors
	MWG	Domestic

Double Mounting Clips: PP material - white colour

Ref	Description	Fam.	Subfam.		
DE035	MWG DOUBLE CLIPS 2″ x 2.5″	30	175		
DE036	MWG DOUBLE CLIPS 2.1/2″x2.1/2″	30	175		

Ref	Description	Diameter (mm)
DE035	MWG DOUBLE CLIPS 2″ x 2.5″	50 x 60
DE036	MWG DOUBLE CLIPS 2.1/2″x2.1/2″	60 x 60

Certificates	Manufacturer	Sectors
	MWG	Domestic

MWG High Pressure Switch

Pressure switch contact NO; Connection ¼" G; Body material in Stainless Steel; Diaphragm in NBR; Max Voltage = 42 V; Max Current = 4 A; Max operating pressure = 150 bar; Operating temperature range = - 40 ÷ + 100°C Class protection IP54; Conform with CE safety Directives;

Ref	Description	Fam.	Subfam.		
DH571	MWG HIGH PRESSURE SWITCH 1-10 BAR	30	175		
DH573	MWG HIGH PRESSURE SWITCH 1-20 BAR	30	175		
DH575	MWG HIGH PRESSURE SWITCH 20-50 BAR	30	175		

Ref	Description	Tollerance
DH571	MWG HIGH PRESSURE SWITCH 1-10 BAR	± 0,5 bar
DH573	MWG HIGH PRESSURE SWITCH 1-20 BAR	± 1 bar
DH575	MWG HIGH PRESSURE SWITCH 20-50 BAR	± 2 bar

Box: WxLxH	Box: Q.ty	Box: Weight	Pallet: WxLxH	Pallet: Q.ty	Pallet: Weight

Certificates	Manufacturer	Sectors
DM174-2004 CE	**MWG**	Domestic, Commercial, Industrial

MWG Booster Pumps for Residential R.O.

- MWG booster pumps for residential R.O. Systems; Max operating Temperature = 40°C;
- Membrane booster pumps without transformer (to order separately);
- IN/OUT connections ⅜" F;

Ref	Description	Fam.	Subfam.		
DH501	MWG BOOSTER PUMP M100G 1.1 LPM 24VDC 1.2A	30	175		
DH503	MWG BOOSTER PUMP L200G 1.6 LPM 24VDC 1.6A	30	175		
DH505	MWG BOOSTER PUMP L400G 2.6 LPM 24VDC 2.5A	30	175		

Ref	Ref Transformer	Inle pressure (psl)	Working pressure range (psl)	Flow 70 psi (l/min)	Rated current (A)	Current 70 psl (A)
DH501	DH531	30	60 ÷ 80	≥ 1,1	1,8	≤ 1,2
DH503	DH533	30	60 ÷ 80	≥ 1,6	2,2	≤ 1,6
DH505	DH535	30	70 ÷ 90	≥ 2,6	3,6	≤ 2,5

Box: WxLxH	Box: Q.ty	Box: Weight	Pallet: WxLxH	Pallet: Q.ty	Pallet: Weight

Certificates	Manufacturer	Sectors
DM174-2004 CE	**MWG**	Domestic

Transformer

Ref	Description	Fam.	Subfam.		
DH531	TRANSFORMER 24VDC 2A	30	175		
DH533	TRANSFORMER 24VDC 2.5A	30	175		
DH535	TRANSFORMER 24VDC 4A	30	175		

Box: WxLxH	Box: Q.ty	Box: Weight	Pallet: WxLxH	Pallet: Q.ty	Pallet: Weight

Certificates	Manufacturer	Sectors
CE		Domestic

MWG Two -Way Solenoid Valves for R.O. Systems

Two-way solenoid valve NC direct acting; Body material plastic; Seals in EPDM; Spring in SS304; Range water temperature = 4°C ÷ 120°C; Range ambient temperature = -10°C ÷ +40°C; Range pressure = 0 ÷ 8 bar; Class protection IP65; Connections ¼" NPT; Orifice diameter 2,5 mm;

Ref	Description	Fam.	Subfam.		
DH601	MWG PLASTIC SOLENOID VALVEC NC 1/4″ NPT 24V DC	30	175		
DH603	MWG PLASTIC SOLENOID VALVEC NC 1/4″ NPT 24V AC	30	175		

Ref	Description	Power supply
DH601	MWG PLASTIC SOLENOID VALVEC NC 1/4″ NPT 24V DC	24 V DC
DH603	MWG PLASTIC SOLENOID VALVEC NC 1/4″ NPT 24V AC	220 V AC

Certificates	Manufacturer	Sectors
DM174-2004 CE	**MWG**	Domestic

Two-way solenoid valve NC direct acting; Body material brass; Seals in EPDM; Range water temperature = 4°C ÷ 120°C;Class protection IP65; G thread connections;

Ref	Description	Fam.	Subfam.		
DH611	MWG BRASS SOLENOID VALVEC NC 1/4″ GAS 24V DC	30	175		
DH615	MWG BRASS SOLENOID VALVEC NC 3/8″ GAS 220V AC 5 BAR	30	175		

Ref	Orifice diameter (mm)	Max operating pressure (bar)
DH611	5	5
DH615	5	5

Certificates	Manufacturer	Sectors
DM174-2004 CE	**MWG**	Domestic, Commercial, Industrial

Two-way solenoid valve NC indirect acting; Body material brass; Seals in EPDM; Range water temperature = 4°C ÷ 120°C; Class protection IP65; G thread connections;

Ref	Description	Fam.	Subfam.		
DH621	MWG BRASS SOLENOID VALVE NC 3/8″ GAS 220V AC 16 BAR	30	175		
DH623	MWG BRASS SOLENOID VALVE NC 1/2″ GAS 220V AC	30	175		
DH625	MWG BRASS SOLENOID VALVE NC 3/4″ GAS 220V AC	30	175		
DH627	MWG BRASS SOLENOID VALVE NC 1″ GAS 220V AC	30	175		
DH629	MWG BRASS SOLENOID VALVE NC 1 1/4″ GAS 220V AC	30	175		
DH631	MWG BRASS SOLENOID VALVE NC 1 1/2″ GAS 220V AC	30	175		
DH633	MWG BRASS SOLENOID VALVE NC 2″ GAS 220V AC	30	175		

Ref	Orifice diameter (mm)	Max operating pressure (bar)
DH621	15	16
DH623	15	16
DH625	20	16
DH627	25	16
DH629	35	16
DH631	35	16
DH633	50	16

Certificates	Manufacturer	Sectors
DM174-2004 CE	**MWG**	Domestic, Commercial, Industrial

Valves for Residential R.O. and Filtration System

Needle Valves

Needle valve for residential R.O and filtration systems; for tube ½” M/F or ⅜” M/F; connection for ¼” or ⅜” or 5⁄16” flexible tubing; material brass.

Ref	Description	Fam.	Subfam.		
DE039	NEEDLE VALVE 1/2″ MF X 1/4 TUBE	30	175		
DE050	NEEDLE VALVE 1/2″ MF X 3/8 TUBE	30	175		
DE050A	NEEDLE VALVE 1/2″ MF X 5/16″TUBE	30	175		
DE039A	NEEDLE VALVE 3/8″ M/F x1/4″ TUBE	30	175		

Drain and Diverter Valves for R.O. Systems

Suitable for residential R.O and filtration systems.
Drain Clamp - material ABS black.

Ref	Description	Fam.	Subfam.		
DE040	DRAIN CLAMP 1/4″ TUBE	30	175		
DE049	DRAIN CLAMP 1/4″ FEMALE NPT	30	175		

Diverter Valve with Swivel Collar

Connection for ¼” tubing; material chrome pleated brass.

Ref	Description	Fam.	Subfam.		
DE042	DIVERTER VALVE W/SWIVEL COLLAR 1/4″ TUBE	30	175		

Adapter 15⁄16” – 27 X 55⁄64” – 27

Length 8 mm; material chrome pleated brass.

Ref	Description	Fam.	Subfam.		
DE043	ADAPTER 15/16″ x 55/64″	30	175		

Jaco Style Fittings

Jaco Style Fittings

Straight

Ref	Description	Fam.	Subfam.		
DE063	STRAIGHT FITTING 1/8″NPT x 1/4″TUBE	30	175		
DE064	STRAIGHT FITTING 1/4″NPT x 1/4″TUBE	30	175		
DE068	STRAIGHT FITTING 1/4″ F NPT X1/4″ TUBE	30	175		
DE069	STRAIGHT FITTING 3/8″ NPT X1/4″ TUBE	30	175		

Elbows

Ref	Description	Fam.	Subfam.		
DE060	ELBOW FITTING 1/8″ NPT x 1/4″ TUBE	30	175		
DE062	ELBOW FITTING1/8″FNPT x 1/4″ TUBE	30	175		
DE061	ELBOW FITTING 1/4″ NPT x 1/4″ TUBE	30	175		
DE070	ELBOW FITTING 3/8″ NPT X 1/4″TUBE	30	175		

Tees

Ref	Description	Fam.	Subfam.		
DE065	TEES FITTING 1/4″ NPT LATERAL X1/4″ TUBE	30	175		
DE066	TEES FITTING 1/4″ NPT CENTRAL X1/4″ TUBE	30	175		
DE067	TEES FITTING 1/4″ TUBE	30	175		

Valves for Residential R.O. and Filtration System

Saddle Valve

Saddle valve self piercing for residential R.O and filtration systems; suitable for copper piping; connection for ¼” tubing; material brass with aluminium clamp.

Ref	Description	Fam.	Subfam.		
DE041	NEEDLE VALVE 1/4″ TUBE	30	175		

Flow Restrictors – Check Valves

In-Line Flow Restrictors

Quick connections ¼” tube.

Ref	Description	Fam.	Subfam.		
DE105	IN LINE FLOW RESTRICTOR 150 MLM - 1/4″ TUBE	30	175		
DE106	IN LINE FLOW RESTRICTOR 300 MLM - 1/4″ TUBE	30	175		
DE107	IN LINE FLOW RESTRICTOR 400 MLM - 1/4″ TUBE	30	175		
DE108	IN LINE FLOW RESTRICTOR 550 MLM - 1/4″ TUBE	30	175		
DE109	IN LINE FLOW RESTRICTOR 600 MLM - 1/4″ TUBE	30	175		
DE110	IN LINE FLOW RESTRICTOR 800 MLM - 1/4″ TUBE	30	175		

Ref	Flow 60 psi (gpd)	Flow 60 psi (ml/min)
DE105	60	150
DE106	115	300
DE107	150	400
DE108	208	550
DE109	227	600
DE110	300	800

JACO Style Check Valve

Jaco style elbow ⅛” x ¼” tube complete with AISI check-valve.

Ref	Description	Fam.	Subfam.		
DE079	ELBOW 1/8″X1/4″ TUBE W/STAINLESS STEEL CHECK VALV	30	175		

S.S. Check Valve

Stainless steel check valve ⅛” x ⅛”..

Ref	Description	Fam.	Subfam.		
DE048	CHECK-VALVE S.S. 1/8″ NPT	30	175		

Elbowed Ball Valve

Material white plastic; connections ¼” F NPT x ¼” tubing.

Ref	Description	Fam.	Subfam.		
DE052	ELBOWED BALL VALVE 1/4″ F NPTx1/4″ TUBE	30	175		

Automatic Shut-Off Valve

Material white ABS; connections ¼” tubing; max pressure 125 psi (8,5 bar).

Ref	Description	Fam.	Subfam.		
DE038	SHUT-OFF VALVE 1/4″ TUBE	30	175		

Storage Tanks for R.O. Systems

PP Storage Tanks

- Pressurized storage tank for treated water;
- White colour;
- Connection ¼” NPT;
- Min. operating pressure 1 bar.

Ref	Description	Fam.	Subfam.		
DE032	PP/SS R.O STORAGE TANK 12 LT.	30	175		
DE051	PLASTIC R.O STORAGE TANK 16 LT.	30	175		

Ref	Diameter (mm)	Height (mm)	Max pressure (bar)
DE032	240	370	7,0
DE051	260	400	3,5

Box: WxLxH	Box: Q.ty	Box: Weight	Pallet: WxLxH	Pallet: Q.ty	Pallet: Weight

Certificates	Manufacturer	Sectors
NSF58 CE		Domestic

Steel Storage Tanks

- Pressurized storage tank for R.O water;
- Material painted steel, white colour;
- Connection 1” BSPP female;
- With threaded extension M 1” x ¼”, with elbowed ball valve with connection ⅜” tubing;
- Min. operating pressure 1 bar;
- Max operating pressure 7 bar.

Ref	Description	Fam.	Subfam.		
DE096	S.S. RO STORAGE TANK 41 LT.	30	175		
DE097	S.S. RO STORAGE TANK 75 LT.	30	175		

Ref	Diameter (mm)	Height (mm)
DE096	390	575
DE097	390	770

Box: WxLxH	Box: Q.ty	Box: Weight	Pallet: WxLxH	Pallet: Q.ty	Pallet: Weight

Certificates	Manufacturer	Sectors
NSF58 CE		Domestic

In-Line Cartridges

R.O. compact assembly and accessories

Ref	Description	Fam.	Subfam.		
DE100	R.O. COMPACT GROUP	30	175		
DE101	MEMBRANE 50 GPD FOR DE100	30	175		
DE102A	PREFILTER CARTRIDGE SEDIMENT/CARBON BLOCK FOR EMPTY COMPACT R.O. ASEMBLY	30	175		
DE103	GAC POSTFILETR CARTRIDGE FOR EMPTY COMPACT R.O. ASSEMBLY	30	175		

Flexible ¼” Tubing

Ref	Description	Fam.	Subfam.		
DE082	PVC TUBE WHITE 1/4˝ - ROLL 50 MT.	30	175		
DE083	PE TUBE BLUE 1/4˝ - ROLL 50 MT.	30	175		
DE084	PE TUBE BLACK 1/4˝ ROLL 50 MT.	30	175		
DE086	PE TUBE RED 1/4˝ - ROLL 50 MT.	30	175		
DE081	PE TUBE CLEAR 1/4˝ - ROLL 100 MT.	30	175		

Insert for Flexible ¼” Tubing: CELCON material.

Ref	Description	Fam.	Subfam.		
DE059	PLASTIC INSERT FOR 1/4˝ TUBE	30	175		

Flow Restrictor Linear Type

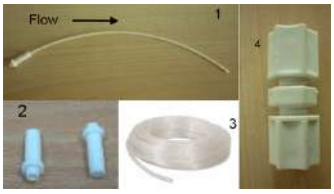

- Capillary adjusting flow system with insertion in tube ¼” diameter (Øe=6,35 mm);
- 200 mm standard length; you can change the length as required (please see the diagram below);
- **WARNING:** it is essential that the cutting of the capillary be net and tube perfectly circular (you can use an awl in order to restore the circular form), otherwise the flow rate value can be greatly altered. Observe the flow direction as shown in Picture n.1.

Ref	Description	Fam.	Subfam.		
DE122	FLOW RESTRICTOR LINEAR TYPE - LG.200 MM	30	175		
DE124	FLOW RESTRICTOR FRT-14P INSERT	30	175		
DE125	CAPILLARY TUBE ROLL 25 MT	30	175		
DE123	FLOW RESTRICTOR JACO 1/4˝ UNION*	30	175		

ITEM	Ref	Description
1	DE122	FLOW RESTRICTOR LINEAR TYPE - LG.200 MM
2	DE124	FLOW RESTRICTOR FRT-14P INSERT
3	DE125	CAPILLARY TUBE ROLL 25 MT
4	DE123	FLOW RESTRICTOR JACO 1/4˝ UNION*

Faucet

Long Reach Faucet

- material chrome pleated; connection for ¼” tubing; complete with installation kit; threaded tube length 50 mm.

Ref	Description	Fam.	Subfam.		
DE037	LONG REACH FAUCET 1/4″ TUBE	30	175		

Certificates	Manufacturer	Sectors
		Domestic

Quarter-Turn faucet

- metal and plastic chrome material;
- connection for ¼” tubing;
- complete with installation kit;
- threaded tube length 71 mm.

Ref	Description	Fam.	Subfam.		
DE116	QUARTER - TURN FAUCET 1/4″ TUBE	30	175		

Certificates	Manufacturer	Sectors
		Domestic

Pressure Gauge - Adapters - Valves

Pressure Gauge

- pressure set 0 ÷ 10 bar;
- connection ⅛” M;
- diameter 25 mm.

Ref	Description	Fam.	Subfam.		
DE077	MANOMETER D.25 0-10 KG/CM2 1/8″	30	175		

Certificates	Manufacturer	Sectors
		Domestic

3 Ways Adapter for Pressure Gauge

- plastic material;
- connections ⅛”F x ⅛”M x ¼” tube.

Ref	Description	Fam.	Subfam.		
DE078	3-WAYS FITTING FOR MANOMETER 1/8 F X 1/8 M X 1/4TUBO	30	175		

Certificates	Manufacturer	Sectors
		Domestic

High/low pressure switch

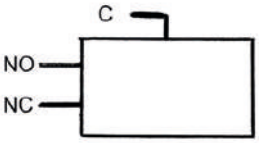

- Pressure 30 - 50 psi;
- Connections ¼ tube;
- To use as high pressure switch contacts C and NC;
- To use as low pressure switch contacts C and NO.

Ref	Description	Fam.	Subfam.		
DE139	PRESSURE SWITCH PSH	30	175		

Certificates	Manufacturer	Sectors
		Domestic

Union connector

Ref	Description	Fam.	Subfam.		
DH073	UNION CONNECTOR 1/4″ - 1/4″	30	175		
DH075	UNION CONNECTOR 3/8″ - 3/8″	30	175		
DH079	UNION CONNECTOR 3/8″ - 1/4″	30	175		

Ref	B1 (mm)	B2 (mm)	Ø E (mm)	L (mm)
DH073	16,9	16,9	15,5	36,2
DH075	20,2	20,2	20,0	42,9
DH079	20,2	16,9	20,0	42,1

Union elbow

Ref	Description	Fam.	Subfam.		
DH083	UNION ELBOW 1/4″ - 1/4″	30	175		
DH085	UNION ELBOW 3/8″ - 3/8″	30	175		

Ref	B1 (mm)	B2 (mm)	Ø E 1 (mm)	Ø E 2 (mm)	L (mm)	H (mm)
DH083	16,9	16,9	15,5	15,5	28,8	28,8
DH085	20,2	20,2	20,0	20,0	35,9	35,9

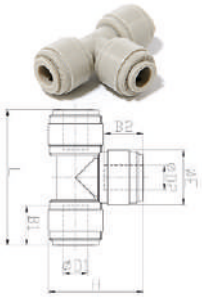

Union T

Ref	Description	Fam.	Subfam.		
DH093	UNION TEE 1/4″ - 1/4″ - 1/4″	30	175		
DH095	UNION TEE 3/8″ - 3/8″ - 3/8″	30	175		

Ref	B1 (mm)	B2 (mm)	B3 (mm)	Ø E (mm)	L (mm)	H (mm)
DH093	16,9	16,9	16,9	15,5	42,0	28,8
DH095	20,2	20,2	20,2	20,0	51,8	35,9

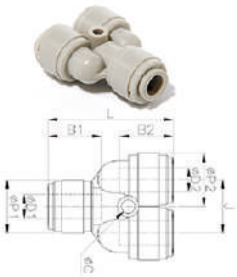

Two way divider

Ref	Description	Fam.	Subfam.		
DH103	TWO WAY DIVIDER 1/4″ - 1/4″ - 1/4″	30	175		
DH105	TWO WAY DIVIDER 3/8″ - 3/8″ - 3/8″	30	175		

Ref	B1 (mm)	B2 (mm)	ø P1 (mm)	ø P2 (mm)	L (mm)	J (mm)	C (mm)
DH103	16,9	16,9	15,5	15,5	38,8	15,5	3,3
DH105	20,2	20,2	20,0	20,0	46,4	20,0	4,5

Fittings

- Suitable for residential R.O. and filtration systems;
- Designed for water, food and air contact but can be used with selected gases, vacuum & other liquids;
- DM 174 (Italy) dated 06/04/2004 compliant about materials suitable for contact with water for human consumption;
- In compliance with the sanitary certification ACS (France);
- In acetal resin grey color, non-toxic and NSF approved material; Pressure max 16 bar @ 25°C.

Male connector NPT

Ref	Description	Fam.	Subfam.		
DH005	MALE CONNECTOR 1/8″ NPT WITH D=1/4″	30	175		
DH006	MALE CONNECTOR 1/4″ NPT WITH D=1/4″	30	175		
DH007	MALE CONNECTOR 3/8″ NPT WITH D=1/4″	30	175		
DH012	MALE CONNECTOR 1/8″ NPT WITH D=3/8″	30	175		
DH013	MALE CONNECTOR 1/4″ NPT WITH D=3/8″	30	175		
DH014	MALE CONNECTOR 3/8″ NPT WITH D=3/8″	30	175		

Ref	A (mm)	B (mm)	Ø E (mm)	H (mm)	L (mm)
DH005	9,1	16,9	17,8	15,8	27,0
DH006	13,2	16,9	17,8	15,8	27,0
DH007	13,8	16,9	21,4	19,0	26,1
DH012	9,1	20,2	23,0	20,6	30,4
DH013	13,2	20,2	23,0	20,6	34,3
DH014	13,8	20,2	23,0	20,6	29,9

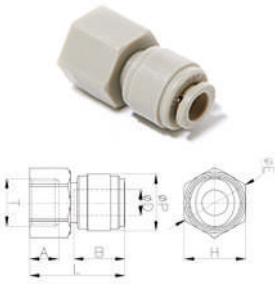

Female adapter NPTF

Ref	Description	Fam.	Subfam.		
DH021	FEMALE ADAPTER 1/8″ NPT WITH D=1/4″	30	175		
DH022	FEMALE ADAPTER 1/4″ NPT WITH D=1/4″	30	175		
DH023	FEMALE ADAPTER 1/4″ NPT WITH D=3/8″	30	175		

Ref	Ø P (mm)	A (mm)	B (mm)	Ø E (mm)	H (mm)	L (mm)
DH021	15,5	11,5	16,9	19,0	17	30,9
DH022	15,5	11,5	16,9	21,5	19	30,9
DH023	20,0	11,5	20,2	21,5	19	34,2

Male elbow NPT

Ref	Description	Fam.	Subfam.		
DH033	MALE ELBOW 1/8″ NPT WITH D=1/4″	30	175		
DH034	MALE ELBOW 1/4″ NPT WITH D=1/4″	30	175		
DH035	MALE ELBOW 3/8″ NPT WITH D=1/4″	30	175		
DH038	MALE ELBOW 1/4″ NPT WITH D=3/8″	30	175		
DH039	MALE ELBOW 3/8″ NPT WITH D=3/8″	30	175		

Ref	Ø P (mm)	A (mm)	B (mm)	E (mm)	H (mm)	L (mm)
DH033	15,5	9,1	16,9	26,4	11,0	25,6
DH034	15,5	13,2	16,9	31,9	11,0	27,0
DH035	15,5	13,8	16,9	32,7	11,0	28,9
DH038	20,0	13,2	20,2	35,2	14,3	31,8
DH039	20,0	13,8	20,2	35,8	14,3	33,9

Fittings

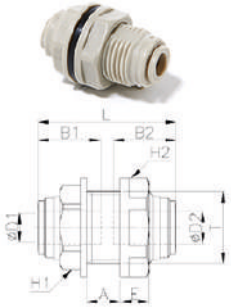

Bulkhead connector

Ref	Description	Fam.	Subfam.		
DH052	BULKHEAD CONNECTOR 1/4″ - 1/4″	30	175		
DH054	BULKHEAD CONNECTOR 3/8″ - 3/8″	30	175		

Ref	T	B1 (mm)	B2 (mm)	H1 (mm)	H2 (mm)	L (mm)
DH052	M17	16,9	16,9	19	21	35,7
DH054	M24	20,2	20,2	24	25,5	42,4

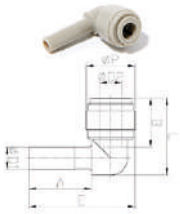

Union elbow tube with stem

Ref	Description	Fam.	Subfam.		
DH063	UNION ELBOW TUBE WITH STEM 1/4″ - 1/4″	30	175		
DH065	UNION ELBOW TUBE WITH STEM 3/8″ - 3/8″	30	175		
DH067	UNION ELBOW TUBE WITH STEM 3/8″ - 1/4″	30	175		

Ref	Ø P (mm)	A (mm)	B (mm)	E (mm)	L (mm)
DH063	15,5	21,0	16,9	34,8	25,1
DH065	20,0	24,8	20,2	43,2	31,4
DH067	17,6	22,5	17,5	38,3	27,7

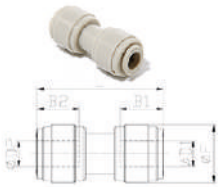

Union connector

Ref	Description	Fam.	Subfam.		
DH073	UNION CONNECTOR 1/4″ - 1/4″	30	175		
DH075	UNION CONNECTOR 3/8″ - 3/8″	30	175		
DH079	UNION CONNECTOR 3/8″ - 1/4″	30	175		

Ref	B1 (mm)	B2 (mm)	Ø E (mm)	L (mm)
DH073	16,9	16,9	15,5	36,2
DH075	20,2	20,2	20,0	42,9
DH079	20,2	16,9	20,0	42,1

Bulkhead flow regulators

Ref	Description	Fam.	Subfam.		
DH157	BULKHEAD FLOW REGULATOR WITH D=1/4″	30	175		
DH158	BULKHEAD FLOW REGULATOR WITH D=3/8″	30	175		

Ref	T	ø P (mm)	A (mm)	B (mm)	E1 (mm)	E2 (mm)	H (mm)	L min (mm)	L max (mm)
DH157	M12	15,5	5,0	16,9	22,2	44,4	16	45,5	50,4
DH158	M15	20,0	6,0	19,8	26,1	52,1	19	52,7	58,4

Fittings

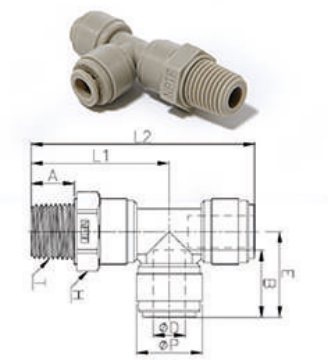

Male Swivel run tee NPT

Ref	Description	Fam.	Subfam.		
DH122	MALE SWIVEL RUN TEE 1/4″ NPT WITH D=1/4″	30	175		
DH124	MALE SWIVEL RUN TEE 3/8″ NPT WITH D=3/8″	30	175		

Ref	ø P (mm)	A (mm)	B (mm)	E (mm)	H (mm)	L1 (mm)	L2 (mm)
DH122	15,5	13,2	16,9	21,0	17,46	36,9	57,9
DH124	20,0	13,0	20,2	25,9	21,4	41,8	67,7

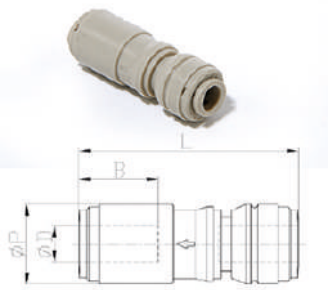

Check valves

Ref	Description	Fam.	Subfam.		
DH131	CHECK VALVES 1/4″	30	175		
DH133	CHECK VALVES 3/8″	30	175		

Ref	Ø P (mm)	B (mm)	L (mm)
DH131	15,5	16,1	45,5
DH133	20,0	19,5	57,8

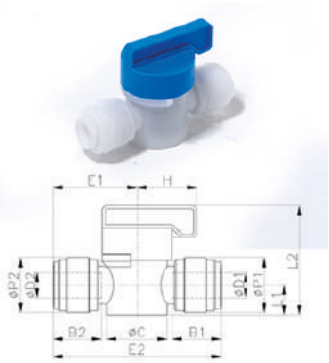

2 ways hand valves

Ref	Description	Fam.	Subfam.		
DH141	2 WAYS HAND VALVES 1/4″	30	175		
DH143	2 WAYS HAND VALVES 3/8″	30	175		

Ref	ø D1 Connection (inch)	ø D2 Connection (inch)	B1 (mm)	B2 (mm)	ø P1 (mm)	ø P2 (mm)	L1 (mm)	L2 (mm)	E (mm)	ø C (mm)
DH141	¼"	¼"	16,1	16,1	15,5	15,5	9,5	34,5	51,7	19,2
DH143	⅜"	⅜"	202	20,2	20,2	20,2	12,5	42,3	63,2	24,2

Fittings

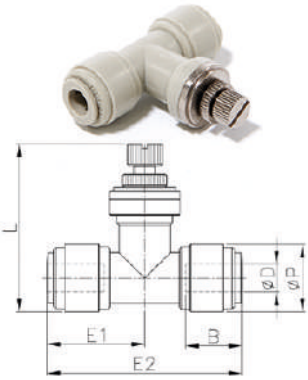

Flow regulators

Ref	Description	Fam.	Subfam.		
DH167	FLOW REGULATOR WITH D=1/4″	30	175		
DH168	FLOW REGULATOR WITH D=3/8″	30	175		

Ref	ø P (mm)	B (mm)	L min (mm)	L max (mm)	E1 (mm)	E2 (mm)
DH167	15,5	16,9	45,5	42,7	22,2	44,4
DH168	20,0	19,8	57,8	49,7	26,1	52,1

Locking clips

Ref	Description	Fam.	Subfam.		
DH193	LOCKING CLIPS FOR FITTINGS 1/4″	30	175		
DH195	LOCKING CLIPS FOR FITTINGS 3/8″	30	175		

Ref	ø D Connection (inch)	ø C (mm)	E (mm)	L (mm)	H (mm)	J (mm)	K (mm)
DH193	06 - ¼"	8,0	11,6	11,6	3,1	6,4	1,3
DH195	10 - ⅜"	11,8	16,0	16,4	3,4	9,2	1,4

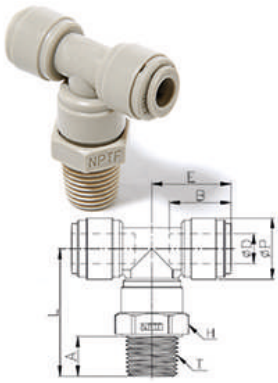

Male swivel tee NPTF

Ref	Description	Fam.	Subfam.		
DH112	MALE SWIVEL TEE 1/4″ NPT WITH D=1/4″	30	175		
DH114	MALE SWIVEL TEE 3/8″ NPT WITH D=3/8″	30	175		

Ref	ø P (mm)	A (mm)	B (mm)	E (mm)	H (mm)	L (mm)
DH112	15,5	13,2	16,9	21,0	17,46	36,9
DH114	20,0	13,0	20,2	25,9	21,4	41,8

PRF-RO Reverse Osmosis System

- Suitable for residential and commercial application use;
- Compact and reliable system that better suits the flow requirements of small and mid-sized businesses;
- No storage tank needed;
- Works with Line Pressure;
- No Pump or Electricity;
- Very easy installation with quick connections;
- Virtually Maintenance Free (change cartridges fast and easy);
- Consisting of Nr.1 Carbon Pre-Filter, Nr.2 R.O. Membrane Elements and Nr.1 Carbon Post-Filter.

Ref	Description	Fam.	Subfam.		
DE904	KIT R.O. PRF-RO SYSTEM P/N 4000462 WITH FAUCET	30	179		

Ref	P.N.	Description
DE904	4000462	KIT R.O. PRF-RO SYSTEM P/N 4000462 WITH FAUCET

OPERATING CONDITIONS	MINIMUM	MAXIMUM
Inlet Pressure	2,8 bar (40 psi)	5,5 bar (80 psi)
Inlet Temperature (°C)	4	38
Inlet TDS (mg/l)	50	2.000
Inlet Hardness (°F)	0	20
Inlet Chlorine (mg/l)	0	1,0
Inlet Iron (mg/l)	0	0,1
Inlet Manganese (mg/l)	0	0,05

Salt Rejection: Minimum 90%, Medium 93%.

TUBING/FITTING DIMENSIONS	
Inlet Tubing (natural tubing)	½”
Concentrate Tubing (black tubing)	⅜”
Permeate Tubing (blue tubing)	⅜”
Drain Tubing (red tubing) for airgap installation	½”
Drain connection	⅜” o ½”
Carbon Post-Filter	⅜” quick disconnect fittings

Filter/Membrane Performance Specifications:

Filter Type	Length (mm)	Diameter (mm)	Flow Rate (lpm)	Flow Rate (gpm)	Average Life (months)
Carbon Pre-Filter	432	74	14,20	3,75	6 (or 19.000 Liters)
RO Element	476	80	0,95	0,25	24 ÷ 48
Carbon Post-Filter	254	51	2,80	0,75	6 (or 19.000 Liters)

Box: WxLxH	Box: Q.ty	Box: Weight	Pallet: WxLxH	Pallet: Q.ty	Pallet: Weight

Certificates	Manufacturer	Sectors
	Pentair	Domestic, Industrial

PRF-RO Reverse Osmosis System

Spare parts of PRF-RO Reverse Osmosis System:

Ref	Description	Fam.	Subfam.		
DE920	MEMBRANE R.O. MERLIN P/N 4000569	30	179		
DE923	CARBON CARTRIDGE PRE FILTER P/N 3038333	30	179		
DE924	PRE FILTER CARTRIDGE SEDIMENT 10 MICRON P/N 1266690	30	179		
DE926	CARBON IN LINE POSTFILTER P/N 255526-09	30	179		
DE937	SUPPORT SHOULDER PRF-RO P/N 3038021	30	179		

Ref	P.N.	Description
DE920	4000569	MEMBRANE R.O. MERLIN P/N 4000569
DE923	3038333	CARBON CARTRIDGE PRE FILTER P/N 3038333
DE924	1266690	PRE FILTER CARTRIDGE SEDIMENT 10 MICRON P/N 1266690
DE926	255526-09	CARBON IN LINE POSTFILTER P/N 255526-09
DE937	3038021	SUPPORT SHOULDER PRF-RO P/N 3038021

EUROTROL®
WATER TREATMENT COMPONENTS

Water softeners

Back to index

MWG Manual Water Softeners

- Suitable for residential and commercial water softening applications, as coffee machines, dishwashers, microwave ovens;
- Tank in 304 Stainless Steel;
- They work with mains water pressure;
- They are supplied with and must be operated only with resin approved for drinking water contact use;
- For regeneration use only Sodium Chloride (NaCl) = coarse cooking salt.

Technical characteristics:

- Nominal Flow Rate at 4 bar = 1.000 l/h
- Operating Water Pressure Range: 1 ÷ 4 bar
- Feed Water Temperature Range: 4 ÷ 25°C
- Room Temperature Range: 4 ÷ 35° C
- Connections: 3/4” G (3/8” G reductions to order separately).

Ref	Description	Fam.	Subfam.		
ADD06	MWG MANUAL WATER SOFTENER 6 L	405	805		
ADD08	MWG MANUAL WATER SOFTENER 8 L	405	805		
ADD12	MWG MANUAL WATER SOFTENER 12 L	405	805		
ADD16	MWG MANUAL WATER SOFTENER 16 L	405	805		
ADD20	MWG MANUAL WATER SOFTENER 20 L	405	805		

Specific accessories

Ref.	Description	Fam.	Subfam.	
ADDR07	3/4″ - 3/8″ ADAPTER FOR MWG WATER SOFTENERS	405	806	

Ref	Box: WxLxH.	Box: Q.ty	Box: Weight.	Pallet: WxLxH.	Pallet: Q.ty	Pallet: Weight.
ADD06						
ADD08						
ADD12						
ADD16						
ADD20						

Certificates	Manufacturer	Sectors
DM174-2004	**MWG**	Domestic, Commercial

RUNXIN Automatic Water Softeners GASTRO Series

- Suitable for residential water softening applications;
- With standard accessories and pre-assembled, with ion exchange resin;
- Standard colours: white tank and blue cover, in High Density Polyethylene (HDPE);
- With F79 Runxin Valve: electronic, volumetric, programmable, multilinguage.

- Pieces per 40' container = 1052.

Ref.	Description	Fam.	Subfam.	
SR001	GASTRO RUNXIN AUTOMATIC WATER SOFTENER	405	807	

Characteristics:	
Connections In/Out	3/4"
Resin Tank Size	7x13
Resin Volume	4 liters
Height	510 mm
Width	195 mm
Depth	360 mm
Power input	100-240 V 50-60 Hz
Power output	12 V 1,5 A
Maximum power	18 W
Operating temperature	5 - 38 °C
Operating pressure	2 - 6 bar
Suggested flow rate	0,3 - 0,4 m3/h
Water capacity per cycle, specified for CaCO3 concentration 250 mg/l	0,8 m3
Type of regeneration	Meter delayed UpFlow - Meter delayed DownFlow
Type of menu	Foreground menu (available for customer) – you can adjust water hardness. Background menu – you can adjust advanced settings.
Languages of menu	English, Spanish, French, Italian, German, Slovakian, Russian, Polish, Chinese, Turkisch, Catalan
Additional functions	With raw water pass valve during regeneration. With External Bypass Valve. With Hard-water mixing screw.

Box: WxLxH (mm)	Box: Q.ty	Box: Weight (kg)	Pallet: WxLxH (mm)	Pallet: Q.ty	Pallet: Weight (kg)
240x410x550	1			24	

Certificates	Manufacturer	Sectors
CE	Runxin	Domestic

RUNXIN Automatic Water Softeners GAIA-M Series

- Suitable for residential water softening applications;
- With standard accessories and pre-assembled, with ion exchange resin;
- Standard colours: white tank and white cover, in High Density Polyethylene (HDPE):
- With F79 Runxin Valve: electronic, volumetric, programmable, multilinguage.

- Pieces per 40' container = 330.

Ref.	Description	Fam.	Subfam.	
SR021	GAIA-M RUNXIN AUTOMATIC WATER SOFTENER	405	807	

Characteristics:	
Connections In/Out	3/4"
Resin Tank Size	10x17
Resin Volume	12 liters
Height	615 mm
Width	326 mm
Depth	525 mm
Power input	100-240 V 50-60 Hz
Power output	12 V 1,5 A
Maximum power	18 W
Operating temperature	5 - 38 °C
Operating pressure	2 - 6 bar
Suggested flow rate	1 m3/h
Water capacity per cycle, specified for CaCO3 concentration 250 mg/l	2,5 m3
Type of regeneration	Meter delayed UpFlow - Meter delayed DownFlow
Type of menu	Foreground menu (available for customer) – you can adjust water hardness. Background menu – you can adjust advanced settings.
Languages of menu	English, Spanish, French, Italian, German, Slovakian, Russian, Polish, Chinese, Turkisch, Catalan.
Additional functions	With raw water pass valve during regeneration. With External Bypass Valve. With Hard-water mixing screw.

Box: WxLxH (mm)	Box: Q.ty	Box: Weight (kg)	Pallet: WxLxH (mm)	Pallet: Q.ty	Pallet: Weight (kg)
465x510x655	1			4	

Certificates	Manufacturer	Sectors
CE	Runxin	Domestic

RUNXIN Automatic Water Softeners GAIA-XL Series

- Suitable for residential water softening applications;
- With standard accessories and pre-assembled, with ion exchange resin;
- Standard colours: white tank and white cover, in High Density Polyethylene (HDPE):
- With F79 Runxin Valve: electronic, volumetric, programmable, multilinguage.

- Pieces per 40' container = 220.

Ref.	Description	Fam.	Subfam.	
SR041	GAIA-XL RUNXIN AUTOMATIC WATER SOFTENER	405	807	

Characteristics:	
Connections In/Out	3/4"
Resin Tank Size	10x35
Resin Volume	25 liters
Height	1070 mm
Width	326 mm
Depth	525 mm
Power input	100-240 V 50-60 Hz
Power output	12 V 1,5 A
Maximum power	18 W
Operating temperature	5 - 38 °C
Operating pressure	2 - 6 bar
Suggested flow rate	1,5 m3/h
Water capacity per cycle, specified for CaCO3 concentration 250 mg/l	5,3 m3
Type of regeneration	Meter delayed UpFlow - Meter delayed DownFlow
Type of menu	Foreground menu (available for customer) – you can adjust water hardness. Background menu – you can adjust advanced settings.
Languages of menu	English, Spanish, French, Italian, German, Slovakian, Russian, Polish, Chinese, Turkisch, Catalan
Additional functions	With raw water pass valve during regeneration. With External Bypass Valve. With Hard-water mixing screw.

Box: WxLxH (mm)	Box: Q.ty	Box: Weight (kg)	Pallet: WxLxH (mm)	Pallet: Q.ty	Pallet: Weight (kg)
465x510x1115	1			4	

Certificates	Manufacturer	Sectors
CE	Runxin	Domestic

RUNXIN Automatic Water Softeners NIKE-M Series

- Suitable for residential water softening applications;
- With standard accessories and pre-assembled, with ion exchange resin;
- Standard colours: white tank and white cover, in High Density Polyethylene (HDPE):
- With F79 Runxin Valve: electronic, volumetric, programmable, multilinguage.

- Pieces per 40' container = 315.

Ref.	Description	Fam.	Subfam.	
SR061	NIKE-M RUNXIN AUTOMATIC WATER SOFTENER	405	807	

Characteristics:	
Connections In/Out	3/4"
Resin Tank Size	10x17
Resin Volume	12 liters
Height	505 mm
Width	350 mm
Depth	580 mm
Power input	100-240 V 50-60 Hz
Power output	12 V 1,5 A
Maximum power	18 W
Operating temperature	5 - 38 °C
Operating pressure	2 - 6 bar
Suggested flow rate	1 m3/h
Water capacity per cycle, specified for CaCO3 concentration 250 mg/l	2,5 m3
Type of regeneration	Meter delayed UpFlow - Meter delayed DownFlow
Type of menu	Foreground menu (available for customer) – you can adjust water hardness. Background menu – you can adjust advanced settings.
Languages of menu	English, Spanish, French, Italian, German, Slovakian, Russian, Polish, Chinese, Turkisch, Catalan
Additional functions	With raw water pass valve during regeneration. With External Bypass Valve. With Hard-water mixing screw.

Box: WxLxH (mm)	Box: Q.ty	Box: Weight (kg)	Pallet: WxLxH (mm)	Pallet: Q.ty	Pallet: Weight (kg)
480x530x645	1			8	

Certificates	Manufacturer	Sectors
CE	Runxin	Domestic

RUNXIN Automatic Water Softeners NIKE-XL Series

- Suitable for residential water softening applications;
- With standard accessories and pre-assembled, with ion exchange resin;
- Standard colours: white tank and white cover, in High Density Polyethylene (HDPE):
- With F79 Runxin Valve: electronic, volumetric, programmable, multilinguage.

- Pieces per 40' container = 210.

Ref.	Description	Fam.	Subfam.	
SR081	NIKE-XL RUNXIN AUTOMATIC WATER SOFTENER	405	807	

Characteristics:	
Connections In/Out	3/4"
Resin Tank Size	10x35
Resin Volume	25 liters
Height	1050 mm
Width	355 mm
Depth	520 mm
Power input	100-240 V 50-60 Hz
Power output	12 V 1,5 A
Maximum power	18 W
Operating temperature	5 - 38 °C
Operating pressure	2 - 6 bar
Suggested flow rate	1,5 m3/h
Water capacity per cycle, specified for CaCO3 concentration 250 mg/l	5,3 m3
Type of regeneration	Meter delayed UpFlow - Meter delayed DownFlow
Type of menu	Foreground menu (available for customer) – you can adjust water hardness. Background menu – you can adjust advanced settings.
Languages of menu	English, Spanish, French, Italian, German, Slovakian, Russian, Polish, Chinese, Turkisch, Catalan
Additional functions	With raw water pass valve during regeneration. With External Bypass Valve. With Hard-water mixing screw.

Box: WxLxH (mm)	Box: Q.ty	Box: Weight (kg)	Pallet: WxLxH (mm)	Pallet: Q.ty	Pallet: Weight (kg)
480x530x1105	1			4	

Certificates	Manufacturer	Sectors
CE	Runxin	Domestic

RUNXIN Automatic Water Softeners MARS-M Series

- Suitable for residential water softening applications;
- With standard accessories and pre-assembled, but without ion exchange resin;
- Standard colours: white tank and white cover, in High Density Polyethylene (HDPE):
- With F79 Runxin Valve: electronic, volumetric, programmable, multilinguage.

- Pieces per 40' container = 372.

Ref.	Description	Fam.	Subfam.	
SR101	MARS-M RUNXIN AUTOMATIC WATER SOFTENER	405	807	

Characteristics:	
Connections In/Out	3/4"
Resin Tank Size	9x17
Resin Volume	11 liters
Height	598 mm
Width	285 mm
Depth	465 mm
Power input	100-240 V 50-60 Hz
Power output	12 V 1,5 A
Maximum power	18 W
Operating temperature	5 - 38 °C
Operating pressure	2 - 6 bar
Suggested flow rate	0,8 - 1 m3/h
Water capacity per cycle, specified for CaCO3 concentration 250 mg/l	2,3 m3
Type of regeneration	Meter delayed UpFlow - Meter delayed DownFlow
Type of menu	Foreground menu (available for customer) – you can adjust water hardness. Background menu – you can adjust advanced settings.
Languages of menu	English, Spanish, French, Italian, German, Slovakian, Russian, Polish, Chinese, Turkisch, Catalan
Additional functions	With raw water pass valve during regeneration. With External Bypass Valve. With Hard-water mixing screw.

Box: WxLxH (mm)	Box: Q.ty	Box: Weight (kg)	Pallet: WxLxH (mm)	Pallet: Q.ty	Pallet: Weight (kg)
385x515x655	1			8	

Certificates	Manufacturer	Sectors
CE	Runxin	Domestic

RUNXIN Automatic Water Softeners MARS-L Series

- Suitable for residential water softening applications;
- With standard accessories and pre-assembled, with ion exchange resin;
- Standard colours: white tank and white cover, in High Density Polyethylene (HDPE):
- With F79 Runxin Valve: electronic, volumetric, programmable, multilinguage.

- Pieces per 40' container = 248.

Ref.	Description	Fam.	Subfam.	
SR121	MARS-L RUNXIN AUTOMATIC WATER SOFTENER	405	807	

Characteristics:	
Connections In/Out	3/4"
Resin Tank Size	9x35
Resin Volume	23 liters
Height	1055 mm
Width	285 mm
Depth	485 mm
Power input	100-240 V 50-60 Hz
Power output	12 V 1,5 A
Maximum power	18 W
Operating temperature	5 - 38 °C
Operating pressure	2 - 6 bar
Suggested flow rate	0,8 - 1 m3/h
Water capacity per cycle, specified for CaCO3 concentration 250 mg/l	4,8 m3
Type of regeneration	Meter delayed UpFlow - Meter delayed DownFlow
Type of menu	Foreground menu (available for customer) – you can adjust water hardness. Background menu – you can adjust advanced settings.
Languages of menu	English, Spanish, French, Italian, German, Slovakian, Russian, Polish, Chinese, Turkisch, Catalan.
Additional functions	With raw water pass valve during regeneration. With External Bypass Valve. With Hard-water mixing screw.

Box: WxLxH (mm)	Box: Q.ty	Box: Weight (kg)	Pallet: WxLxH (mm)	Pallet: Q.ty	Pallet: Weight (kg)
385x515x1115	1			4	

Certificates	Manufacturer	Sectors
CE	Runxin	Domestic

RUNXIN Automatic Water Softeners EOS-M Series

- Suitable for residential water softening applications;
- With standard accessories and pre-assembled, with ion exchange resin;
- Standard colours: white tank and white cover, in High Density Polyethylene (HDPE):
- With F79 Runxin Valve: electronic, volumetric, programmable, multilinguage.

- Pieces per 40' container = 327.

Ref.	Description	Fam.	Subfam.	
SR141	EOS-M RUNXIN AUTOMATIC WATER SOFTENER	405	807	

Characteristics:	
Connections In/Out	3/4"
Resin Tank Size	10x17
Resin Volume	12 liters
Height	615 mm
Width	325 mm
Depth	525 mm
Power input	100-240 V 50-60 Hz
Power output	12 V 1,5 A
Maximum power	18 W
Operating temperature	5 - 38 °C
Operating pressure	2 - 6 bar
Suggested flow rate	1 m3/h
Water capacity per cycle, specified for CaCO3 concentration 250 mg/l	2,5 m3
Type of regeneration	Meter delayed UpFlow - Meter delayed DownFlow
Type of menu	Foreground menu (available for customer) – you can adjust water hardness. Background menu – you can adjust advanced settings.
Languages of menu	English, Spanish, French, Italian, German, Slovakian, Russian, Polish, Chinese, Turkisch, Catalan.
Additional functions	With raw water pass valve during regeneration. With External Bypass Valve. With Hard-water mixing screw.

Box: WxLxH (mm)	Box: Q.ty	Box: Weight (kg)	Pallet: WxLxH (mm)	Pallet: Q.ty	Pallet: Weight (kg)
390x570x1135	1			8	

Certificates	Manufacturer	Sectors
CE	Runxin	Domestic

RUNXIN Automatic Water Softeners EOS-XL Series

- Suitable for residential water softening applications;
- With standard accessories and pre-assembled, with ion exchange resin;
- Standard colours: white tank and white cover, in High Density Polyethylene (HDPE):
- With F79 Runxin Valve: electronic, volumetric, programmable, multilinguage.

- Pieces per 40' container = 218.

Ref.	Description	Fam.	Subfam.	
SR161	EOS-XL RUNXIN AUTOMATIC WATER SOFTENER	405	807	

Characteristics:	
Connections In/Out	3/4"
Resin Tank Size	10x35
Resin Volume	25 liters
Height	1070 mm
Width	320 mm
Depth	525 mm
Power input	100-240 V 50-60 Hz
Power output	12 V 1,5 A
Maximum power	18 W
Operating temperature	5 - 38 °C
Operating pressure	2 - 6 bar
Suggested flow rate	1,5 m3/h
Water capacity per cycle, specified for CaCO3 concentration 250 mg/l	5,3 m3
Type of regeneration	Meter delayed UpFlow - Meter delayed DownFlow
Type of menu	Foreground menu (available for customer) – you can adjust water hardness. Background menu – you can adjust advanced settings.
Languages of menu	English, Spanish, French, Italian, German, Slovakian, Russian, Polish, Chinese, Turkisch, Catalan.
Additional functions	With raw water pass valve during regeneration. With External Bypass Valve. With Hard-water mixing screw.

Box: WxLxH (mm)	Box: Q.ty	Box: Weight (kg)	Pallet: WxLxH (mm)	Pallet: Q.ty	Pallet: Weight (kg)
385x515x655	1			4	

Certificates	Manufacturer	Sectors
CE	Runxin	Domestic

RUNXIN Automatic Water Softeners HERA-S Series

- Suitable for residential water softening applications;
- With standard accessories and pre-assembled, with ion exchange resin;
- Standard colours: white tank and white cover, in High Density Polyethylene (HDPE):
- With F79 Runxin Valve: electronic, volumetric, programmable, multilinguage.

- Pieces per 40' container = 450.

Ref.	Description	Fam.	Subfam.	
SR181	HERA-S RUNXIN AUTOMATIC WATER SOFTENER	405	807	

Characteristics:	
Connections In/Out	3/4"
Resin Tank Size	8x17
Resin Volume	8 liters
Height	630 mm
Width	260 mm
Depth	440 mm
Power input	100-240 V 50-60 Hz
Power output	12 V 1,5 A
Maximum power	18 W
Operating temperature	5 - 38 °C
Operating pressure	2 - 6 bar
Suggested flow rate	0,6 m3/h
Water capacity per cycle, specified for CaCO3 concentration 250 mg/l	1,7 m3
Type of regeneration	Meter delayed UpFlow - Meter delayed DownFlow
Type of menu	Foreground menu (available for customer) – you can adjust water hardness. Background menu – you can adjust advanced settings.
Languages of menu	English, Spanish, French, Italian, German, Slovakian, Russian, Polish, Chinese, Turkisch, Catalan.
Additional functions	With raw water pass valve during regeneration. With External Bypass Valve. With Hard-water mixing screw.

Box: WxLxH (mm)	Box: Q.ty	Box: Weight (kg)	Pallet: WxLxH (mm)	Pallet: Q.ty	Pallet: Weight (kg)
325x485x685	1			8	

Certificates	Manufacturer	Sectors
CE	Runxin	Domestic

RUNXIN Automatic Water Softeners HERA-L Series

- Suitable for residential water softening applications;
- With standard accessories and pre-assembled, with ion exchange resin;
- Standard colours: white tank and white cover, in High Density Polyethylene (HDPE):
- With F79 Runxin Valve: electronic, volumetric, programmable, multilinguage.

- Pieces per 40' container = 300.

Ref.	Description	Fam.	Subfam.	
SR201	HERA-L RUNXIN AUTOMATIC WATER SOFTENER	405	807	

Characteristics:	
Connections In/Out	3/4"
Resin Tank Size	8x35
Resin Volume	20 liters
Height	1090 mm
Width	260 mm
Depth	440 mm
Power input	100-240 V 50-60 Hz
Power output	12 V 1,5 A
Maximum power	18 W
Operating temperature	5 - 38 °C
Operating pressure	2 - 6 bar
Suggested flow rate	1,5 m3/h
Water capacity per cycle, specified for CaCO3 concentration 250 mg/l	4,2 m3
Type of regeneration	Meter delayed UpFlow - Meter delayed DownFlow
Type of menu	Foreground menu (available for customer) – you can adjust water hardness. Background menu – you can adjust advanced settings.
Languages of menu	English, Spanish, French, Italian, German, Slovakian, Russian, Polish, Chinese, Turkisch, Catalan.
Additional functions	With raw water pass valve during regeneration. With External Bypass Valve. With Hard-water mixing screw.

Box: WxLxH (mm)	Box: Q.ty	Box: Weight (kg)	Pallet: WxLxH (mm)	Pallet: Q.ty	Pallet: Weight (kg)
325x485x1150	1			4	

Certificates	Manufacturer	Sectors
CE	Runxin	Domestic

RUNXIN Automatic Water Softeners SATURN-M Series

- Suitable for residential water softening applications;
- With standard accessories and pre-assembled, with ion exchange resin;
- Standard colours: white tank and white cover, in High Density Polyethylene (HDPE):
- With F105 Runxin Valve: electronic, volumetric, programmable, multilinguage.

- Pieces per 40' container = 350.

Ref.	Description	Fam.	Subfam.	
SR221	SATURN-M RUNXIN AUTOMATIC WATER SOFTENER	405	807	

Characteristics:	
Connections In/Out	3/4"
Resin Tank Size	10x15
Resin Volume	11 liters
Height	540 mm
Width	315 mm
Depth	450 mm
Power input	100-240 V 50-60 Hz
Power output	12 V 1,5 A
Maximum power	18 W
Operating temperature	5 - 38 °C
Operating pressure	1,5 - 4 bar
Suggested flow rate	0,8 - 1 m3/h
Water capacity per cycle, specified for CaCO3 concentration 250 mg/l	2,3 m3
Type of regeneration	Meter delayed UpFlow - Meter delayed DownFlow
Type of menu	Foreground menu (available for customer) – you can adjust water hardness. Background menu – you can adjust advanced settings.
Languages of menu	English, Spanish, French, Italian, German, Chinese.
Additional functions	With raw water pass valve during regeneration. Bypass included. With Hard-water mixing screw. Possibility to connect a disinfecting device. Anti-flooding protection. Vacation mode. Possibility to set the head in the closed position. Dry brine tank. Salt refill alarm. Service alarm. WIFI module.

Box: WxLxH (mm)	Box: Q.ty	Box: Weight (kg)	Pallet: WxLxH (mm)	Pallet: Q.ty	Pallet: Weight (kg)
380x500x605	1			8	

Certificates	Manufacturer	Sectors
CE	Runxin	Domestic

RUNXIN Automatic Water Softeners SATURN-XL Series

- Suitable for residential water softening applications;
- With standard accessories and pre-assembled, with ion exchange resin;
- Standard colours: white tank and white cover, in High Density Polyethylene (HDPE):
- With F105 Runxin Valve: electronic, volumetric, programmable, multilinguage.

- Pieces per 40' container = 250.

Ref.	Description	Fam.	Subfam.	
SR241	SATURN-XL RUNXIN AUTOMATIC WATER SOFTENER	405	807	

Characteristics:	
Connections In/Out	3/4"
Resin Tank Size	10x35
Resin Volume	25 liters
Height	1045 mm
Width	315 mm
Depth	450 mm
Power input	100-240 V 50-60 Hz
Power output	12 V 1,5 A
Maximum power	18 W
Operating temperature	5 - 38 °C
Operating pressure	1,5 - 4 bar
Suggested flow rate	1 - 2,5 m3/h
Water capacity per cycle, specified for CaCO3 concentration 250 mg/l	5,3 m3
Type of regeneration	Meter delayed UpFlow - Meter delayed DownFlow
Type of menu	Foreground menu (available for customer) – you can adjust water hardness. Background menu – you can adjust advanced settings.
Languages of menu	English, Spanish, French, Italian, German, Chinese.
Additional functions	With raw water pass valve during regeneration. Bypass included. With Hard-water mixing screw. Possibility to connect a disinfecting device. Anti-flooding protection. Vacation mode. Possibility to set the head in the closed position. Dry brine tank. Salt refill alarm. Service alarm. WIFI module.

Box: WxLxH (mm)	Box: Q.ty	Box: Weight (kg)	Pallet: WxLxH (mm)	Pallet: Q.ty	Pallet: Weight (kg)
380x500x1115	1			4	

Certificates	Manufacturer	Sectors
CE	Runxin	Domestic

RUNXIN Automatic Water Softeners ROMA-M Series

- Suitable for residential water softening applications;
- With standard accessories and pre-assembled, with ion exchange resin;
- Standard colours: white tank and white cover, in High Density Polyethylene (HDPE):
- With F79 Runxin Valve: electronic, volumetric, programmable, multilinguage.

- Pieces per 40' container = 350.

Ref.	Description	Fam.	Subfam.	
SR261	ROMA-M RUNXIN AUTOMATIC WATER SOFTENER	405	807	

Characteristics:	
Connections In/Out	3/4"
Resin Tank Size	10x15
Resin Volume	15 liters
Height	545 mm
Width	315 mm
Depth	455 mm
Power input	100-240 V 50-60 Hz
Power output	12 V 1,5 A
Maximum power	18 W
Operating temperature	5 - 38 °C
Operating pressure	1,5 - 4 bar
Suggested flow rate	0,8 - 1 m3/h
Water capacity per cycle, specified for CaCO3 concentration 250 mg/l	2,3 m3
Type of regeneration	Meter delayed UpFlow - Meter delayed DownFlow
Type of menu	Foreground menu (available for customer) – you can adjust water hardness. Background menu – you can adjust advanced settings.
Languages of menu	English, Spanish, French, Italian, German, Slovakian, Russian, Polish, Chinese, Turkisch, Catalan.
Additional functions	With raw water pass valve during regeneration. With External Bypass Valve. With Hard-water mixing screw. Possibility to connect a disinfecting device.

Box: WxLxH (mm)	Box: Q.ty	Box: Weight (kg)	Pallet: WxLxH (mm)	Pallet: Q.ty	Pallet: Weight (kg)
380x500x605	1			8	

Certificates	Manufacturer	Sectors
CE	Runxin	Domestic

RUNXIN Automatic Water Softeners ROMA-XL Series

- Suitable for residential water softening applications;
- With standard accessories and pre-assembled, with ion exchange resin;
- Standard colours: white tank and white cover, in High Density Polyethylene (HDPE):
- With F79 Runxin Valve: electronic, volumetric, programmable, multilinguage.

- Pieces per 40' container = 250.

Ref.	Description	Fam.	Subfam.	
SR281	ROMA-XL RUNXIN AUTOMATIC WATER SOFTENER	405	807	

Characteristics:	
Connections In/Out	3/4"
Resin Tank Size	10x35
Resin Volume	25 liters
Height	1050 mm
Width	315 mm
Depth	455 mm
Power input	100-240 V 50-60 Hz
Power output	12 V 1,5 A
Maximum power	18 W
Operating temperature	5 - 38 °C
Operating pressure	1,5 - 4 bar
Suggested flow rate	1 - 2,5 m3/h
Water capacity per cycle, specified for CaCO3 concentration 250 mg/l	5,3 m3
Type of regeneration	Meter delayed UpFlow - Meter delayed DownFlow
Type of menu	Foreground menu (available for customer) – you can adjust water hardness. Background menu – you can adjust advanced settings.
Languages of menu	English, Spanish, French, Italian, German, Slovakian, Russian, Polish, Chinese, Turkisch, Catalan.
Additional functions	With raw water pass valve during regeneration. With External Bypass Valve. With Hard-water mixing screw. Possibility to connect a disinfecting device.

Box: WxLxH (mm)	Box: Q.ty	Box: Weight (kg)	Pallet: WxLxH (mm)	Pallet: Q.ty	Pallet: Weight (kg)
380x500x1115	1			4	

Certificates	Manufacturer	Sectors
CE	Runxin	Domestic

Automatic Water Softeners LUNA-XL Series

- Suitable for residential water softening applications;
- With standard accessories and pre-assembled, with ion exchange resin;
- Standard colours: white tank and white cover, in High Density Polyethylene (HDPE):
- With F79 Runxin Valve: electronic, volumetric, programmable, multilinguage.

- Pieces per 40' container = 220.

Ref.	Description	Fam.	Subfam.	
SR301	LUNA-XL RUNXIN AUTOMATIC WATER SOFTENER	405	807	

Characteristics:	
Connections In/Out	3/4"
Resin Tank Size	10x35
Resin Volume	25 liters
Height	1090 mm
Width	360 mm
Depth	490 mm
Power input	100-240 V 50-60 Hz
Power output	12 V 1,5 A
Maximum power	18 W
Operating temperature	5 - 38 °C
Operating pressure	2 - 6 bar
Suggested flow rate	1,5 m3/h
Water capacity per cycle, specified for CaCO3 concentration 250 mg/l	7,3 m3
Type of regeneration	Meter delayed UpFlow - Meter delayed DownFlow
Type of menu	Foreground menu (available for customer) – you can adjust water hardness. Background menu – you can adjust advanced settings.
Languages of menu	English, Spanish, French, Italian, German, Slovakian, Russian, Polish, Chinese, Turkisch, Catalan.
Additional functions	With raw water pass valve during regeneration. With External Bypass Valve. With Hard-water mixing screw. Possibility to connect a disinfecting device.

Box: WxLxH (mm)	Box: Q.ty	Box: Weight (kg)	Pallet: WxLxH (mm)	Pallet: Q.ty	Pallet: Weight (kg)
450x520x1135	1			4	

Certificates	Manufacturer	Sectors
CE	Runxin	Domestic

RUNXIN Automatic Water Softeners LUNA-XXL Series

- Suitable for residential water softening applications;
- With standard accessories and pre-assembled, with ion exchange resin;
- Standard colours: white tank and white cover, in High Density Polyethylene (HDPE):
- With F79 Runxin Valve: electronic, volumetric, programmable, multilinguage.

- Pieces per 40' container = 110.

Ref.	Description	Fam.	Subfam.	
SR321	LUNA-XXL RUNXIN AUTOMATIC WATER SOFTENER	405	807	

Characteristics:	
Connections In/Out	3/4"
Resin Tank Size	10x44
Resin Volume	35 liters
Height	1300 mm
Width	360 mm
Depth	490 mm
Power input	100-240 V 50-60 Hz
Power output	12 V 1,5 A
Maximum power	18 W
Operating temperature	5 - 38 °C
Operating pressure	2 - 6 bar
Suggested flow rate	1,5 m3/h
Water capacity per cycle, specified for CaCO3 concentration 250 mg/l	7,4 m3
Type of regeneration	Meter delayed UpFlow - Meter delayed DownFlow
Type of menu	Foreground menu (available for customer) – you can adjust water hardness. Background menu – you can adjust advanced settings.
Languages of menu	English, Spanish, French, Italian, German, Slovakian, Russian, Polish, Chinese, Turkisch, Catalan.
Additional functions	With raw water pass valve during regeneration. With External Bypass Valve. With Hard-water mixing screw. Possibility to connect a disinfecting device.

Box: WxLxH (mm)	Box: Q.ty	Box: Weight (kg)	Pallet: WxLxH (mm)	Pallet: Q.ty	Pallet: Weight (kg)
450x520x1400	1			4	

Certificates	Manufacturer	Sectors
CE	Runxin	Domestic

Eurotrol
Via Enrico Fermi, 23 Settimo M.se (MI)

13 km from
Milano Centrale train station

14 km from
the centre of the city

36 km from Linate Airport
45 km from Malpensa Airport
61 km from Orio al Serio (BG) Airport

EUROTROL®
WATER TREATMENT COMPONENTS

Eurotrol S.p.A. Socio Unico Soc. sogg. a contr. e coord. della M.W.G. Srl
Via Enrico Fermi, 23 • 20019 Settimo M.se (MI) • Italy • Tel +39.02.335458 r.a.

www.eurotrol.it

EUROTROL® is present on all major social networks

09 - 2021 Material for the exclusive use of the sales.